NATIONAL AERONAUTICS AND SPACE ADMINISTRATION

NASA CR-
134448

(NASA-CR-134448) AIRLOADS INVESTIGATION OF AN 0.030-SCALE MODEL OF THE SPACE SHUTTLE VEHICLE 140A/B LAUNCH CONFIGURATION (MODEL 47-OTS) IN THE ARC 11-FOOT UNITARY PLAN WIND TUNNEL FOR MACH RANGE 0.6 TO 1.4 (IA14A).

N75-23660

Unclas
G3/18 20535

SPACE SHUTTLE

AEROTHERMODYNAMIC DATA REPORT

JOHNSON SPACE CENTER

HOUSTON, TEXAS

DATA MANagement services

SPACE DIVISION CHRYSLER CORPORATION

March, 1975

DMS-DR-2084
NASA CR-134,448

VOLUME 6 OF 11

AIRLOADS INVESTIGATION OF AN 0.030-SCALE MODEL OF THE SPACE SHUTTLE VEHICLE 140A/B LAUNCH CONFIGURATION (MODEL 47-OTS) IN THE ARC 11-FOOT UNITARY PLAN WIND TUNNEL FOR MACH RANGE 0.6 TO 1.4 (IA14A)

by

R. L. Gillins
Rockwell International Space Division

Prepared under NASA Contract Number NAS9-13247

by

Data Management Services
Chrysler Corporation Space Division

for

Engineering Analysis Division

Johnson Space Center
National Aeronautics and Space Administration
Houston, Texas

WIND TUNNEL SPECIFICS:

Test Number:	ARC 11-716
NASA Series No.:	IA14A
Model Number:	47-OTS
Test Dates:	4 through 13 September 1973

FACILITY COORDINATOR:

Stuart L. Treon
Mail Stop 227-5
Ames Research Center
Moffett Field, Calif. 94035

Phone: (415) 965-5850

PROJECT ENGINEERS:

R. L. Gillins,
V. Esparza, &
W. Embury
RI Space Div.
12214 Lakewood Blvd.
Mail Code AC07
Downey, Ca. 90241
Ph: (213) 922-4898

J. Brownson
Ames Research Center
Mail Stop 227-5
Moffett Field, Ca.
94035
Ph: (415) 965-6262

AERODYNAMIC ANALYSIS ENGINEERS:

I. M. Jaremenko
H. G. Webb
RI Space Division
12214 Lakewood Blvd.
Mail Stop AC07
Downey, Ca. 90241
Ph: (213) 922-2703

DATA MANAGEMENT SERVICES:

Prepared by: Liaison--D. A. Sarver
Operations--M. M. Mann, J. T. Daviet

Reviewed by: D. E. Poucher, J. L. Glynn

Approved: N. D. Kemp, Manager
Data Management Services

Concurrence: J. G. Swider, Manager
Flight Technology Branch

Chrysler Corporation Space Division assumes no responsibility for the data presented other than display characteristics.

AIRLOADS INVESTIGATION OF AN 0.030-SCALE MODEL OF THE SPACE SHUTTLE VEHICLE 140A/B LAUNCH CONFIGURATION (MODEL 47-OTS) IN THE ARC 11-FOOT UNITARY PLAN WIND TUNNEL FOR MACH RANGE 0.6 TO 1.4 (IA14A)

VOLUME 6

By R. L. Gillins, Rockwell International Space Division

ABSTRACT

This report presents results of tests conducted on an 0.030-scale launch configuration model of the Space Shuttle Vehicle 140A/B in the NASA/ARC 11-Foot Unitary Plan Wind Tunnel. Aerodynamic loads data were obtained at Mach numbers from 0.6 to 1.4.

Surface pressure distributions were obtained simultaneously with six-component stability and control force data on the complete launch configuration. The configuration consisted of the orbiter, an external tank, two solid rocket boosters, and associated intercomponent attach hardware. Angles of attack and sideslip from -10 degrees to +10 degrees were investigated. The tests, designated IA14A, were conducted from 4 September 1973 through 13 September 1973.

TABLE OF CONTENTS

TABLE OF CONTENTS (Concluded)

INDEX OF MODEL FIGURES

INTRODUCTION

The 0.030-scale aero loads Space Shuttle Model was tested in the ARC Unitary Plan Wind Tunnels as follows:

IA14A	4 thru 13 Sept. 1973
IA14B	17 thru 19 Sept. 1973
OA22A	13 thru 14 Sept. 1973
OA22B	19 thru 20 Sept. 1973

For tests IA14B, OA22A, and OA22B, see reference 34, 35, and 36, respectively.

The testing was conducted in the 11-foot and the 9- by 7-foot tunnels of the ARC Unitary Plan Wind Tunnels. The IAI4A/B tests were for the launch configurations at Mach numbers from 0.6 to 2.2. The OA22A/B tests were for the orbiter alone configuration at Mach numbers from 0.6 to 2.2. The effects of control surface deflections were also investigated in tests OA22A/B.

This report for test IA14A consists of one volume of force data and ten volumes of pressure data for a total of eleven volumes arrayed in the following manner:

Volume No.	Contents	Page
1.	IA14A force data	
2.	IA14A plotted pressure data	
3.	IA14A tabulated pressure data	
	(a) Orbiter fuselage (B)	1-725
	(b) Orbiter base (C)	726-918

NOMENCLATURE
General

SYMBOL	SADSAC SYMBOL	DEFINITION
a		speed of sound; m/sec, ft/sec
C_p	CP	pressure coefficient; $(p_l - p_\infty)/q$
M	MACH	Mach number; V/a
p		pressure; N/m^2, psf
q	Q(NSM) Q(PSF)	dynamic pressure; $1/2\rho V^2$, N/m^2, psf
RN/L	RN/L	unit Reynolds number; per m, per ft
V		velocity; m/sec, ft/sec
α	ALPHA	angle of attack, degrees
β	BETA	angle of sideslip, degrees
ψ	PSI	angle of yaw, degrees
ϕ	PHI	angle of roll, degrees
ρ		mass density; kg/m^3, $slugs/ft^3$
		Reference & C.G. Definitions
A_b		base area; m^2, ft^2
b	BREF	reference span; m, ft
c.g.		center of gravity
$\bar{c}$		reference length or wing mean aerodynamic chord; m, ft
S	SREF	wing area or reference area; m^2, ft^2
	MRP	moment reference point
	XMRP	moment reference point on X axis
	YMRP	moment reference point on Y axis
	ZMRP	moment reference point on Z axis

SUBSCRIPTS

b	base
l	local
s	static conditions
t	total conditions
∞	free stream

NOMENCLATURE (Continued)

Body-Axis System

SYMBOL	SADSAC SYMBOL	DEFINITION
C_N	CN	normal-force coefficient; $\frac{\text{normal force}}{qS}$
C_A	CA	axial-force coefficient; $\frac{\text{axial force}}{qS}$
C_Y	CY	side-force coefficient; $\frac{\text{side force}}{qS}$
C_{A_b}	CAB	base-force coefficient; $\frac{\text{base force}}{qS}$ $-A_b(p_b - p_\infty)/qS$
C_{A_f}	CAF	forebody axial force coefficient, $C_A - C_{A_b}$
C_m	CIM	pitching-moment coefficient; $\frac{\text{pitching moment}}{qS\ell_{REF}}$
C_n	CYN	yawing-moment coefficient; $\frac{\text{yawing moment}}{qSb}$
C_ℓ	CBL	rolling-moment coefficient; $\frac{\text{rolling moment}}{qSb}$
		Stability-Axis System
C_L	CL	lift coefficient; $\frac{\text{lift}}{qS}$
C_D	CD	drag coefficient; $\frac{\text{drag}}{qS}$
C_{D_b}	CDB	base-drag coefficient; $\frac{\text{base drag}}{qS}$
C_{D_f}	CDF	forebody drag coefficient; $C_D - C_{D_b}$
C_Y	CY	side-force coefficient; $\frac{\text{side force}}{qS}$
C_m	CIM	pitching-moment coefficient; $\frac{\text{pitching moment}}{qS\ell_{REF}}$
C_n	CIN	yawing-moment coefficient; $\frac{\text{yawing moment}}{qSb}$
C_ℓ	CSL	rolling-moment coefficient; $\frac{\text{rolling moment}}{qSb}$
L/D	L/D	lift-to-drag ratio; C_L/C_D

NOMENCLATURE (Continued)
Additions To Standard List

Symbol	SADSAC Symbol	Definition
$A_{(\ )}$		model base area, subscript is base orifice number and identifies location
C_{A_b}	CAB	model base axial-force coefficient
$C_{p_{(\ )}}$		model static pressure coefficient, subscript is orifice number, $[p_{(\ )} - p_\infty]/q$
C_{AU}	CA	axial-force coefficient, unadjusted
C_{AF}	CAF	forebody axial-force coefficient, C_{AU} adjusted for base terms
ET		external tank
IV		integrated vehicle, consists of orbiter, external tank, and two solid rocket motors
ℓ_{REF}	LREF	reference length, inches
MRC		moment reference center
OMS		orbital maneuvering system
δ_e	ELEVON	elevon, surface deflection angle, positive deflection trailing edge down, degrees
δ_f	BDFLAP	orbiter body flap deflection angle, positive deflection angle is trailing edge down, degrees
δ_R	RUDDER	rudder, surface deflection angle, positive deflection trailing edge to the left, degrees
δ_{SB}	SPDBRK	speed brake deflection angle, left split rudder trailing edge left and right split rudder trailing edge right, $\delta_{SB} = (\delta_{RL} + \delta_{RR})/2$, positive deflection, degrees
i_o	ORBINC	incidence angle between the orbiter and external tank, $i_0 = \alpha_0 - \alpha_T$, degrees

NOMENCLATURE (Continued)

β_T	BETAT	angle of sideslip of external tank, degrees
α_T	ALPHAT	angle of attack of external tank, degrees
ℓ_B	LB	length of orbiter body, in
ℓ_T	LT	length of external tank, in
ℓ_S	LS	length of SRM booster, in
ℓ_{NM}	LNM	length of OMS nozzle, positive direction forward of exit plane, in
ℓ_{NP}	LNP	length of MPS nozzle, positive direction forward of exit plane, in
b/2	BW	wing semi-span, in
b_V	BV	vertical tail span, in
x	X	distance from component nose, in
y	Y	lateral distance from centerline, in
z	Z	vertical distance measured from W.L. 500 (vertical tail reference root chord), in
c_W	CW	local wing chord, in
c_V	CV	local vertical tail chord, in
x/ℓ_B	X/LB	longitudinal position/orbiter body length
x/ℓ_T	X/LT	longitudinal position/external tank length
x/ℓ_S	X/LS	longitudinal position/booster length
x/ℓ_{NM}	X/LNM	longitudinal position/OMS nozzle length

NOMENCLATURE (Concluded)

x/ℓ_{NP}	X/LNP	longitudinal position/MPS nozzle length
x/c_w	X/CW	local chordwise position/local wing chord length
x/c_v	X/CV	local chordwise position/local vertical tail chord length.
η	Y/BW	local spanwise position/wing semi-span
η_v	Z/BV	local spanwise position/vertical tail span
x_{CP}/ℓ	XCP/L	center of pressure distance from MRC, expressed as a fraction of body length
β_0	BETAO	angle of sideslip of orbiter
α_0	ALPHAO	angle of attack of orbiter

CONFIGURATIONS INVESTIGATED

The 0.030-scale Aero Loads Model, 47-OTS, was configured after the Shuttle Vehicle MCR 0200 Baseline R1, as defined in drawing number VL70-000088B. The orbiter configuration was a combination of the VL70-000140A orbiter and a VL70-000140B wing and midbody, from which the 140A/B designation was derived. The basic launch configuration consisted of the orbiter, an external tank with simulated fuel and vent lines, and two solid rocket boosters, designated O_1 T_{12} S_{12} N_{25}.

Three launch configurations were tested. One was the basic configuration described above mounted on a dual balance and sting arrangement, illustrated in figure 2d. A second contained attach hardware, designated AT_{10}, mating the orbiter with the external tank and mounted on a single sting and balance in the orbiter, illustrated in figure 2b. The third utilized a similar attach hardware configuration, designated AT_{11}, which was attached to the orbiter but not to the external tank and was mounted on the same dual sting and balance arrangement as the basic configuration (figure 2c). In all three configurations, the SRB-to-ET attach hardware was simulated at the forward attach location but not at the aft attach location. Model and component general arrangements are shown in figures 2e through 2o.

Component	Description
O_1	140A/B orbiter minus the main propulsion system nozzles
T_{12}	324-inch diameter external tank with ogive nose and external fuel and vent lines
S_{12}	142.3-inch diameter solid rocket boosters

N_{25}	Nozzles for S_{12} boosters
AT_{10}	Orbiter-to-ET attach hardware, fixed to both vehicles
AT_{11}	Orbiter-to-ET attach hardware, fixed to orbiter only
LV	O_1 T_{12} S_{12} N_{25}
LVA	O_1 T_{12} S_{12} N_{25} AT_{10}
LVAP	O_1 T_{12} S_{12} N_{25} AT_{11}

The orbiter O_1, consisted of the following components:

B_{26} C_9 F_8 M_7 N_{28} V_8 R_5 W_{116} E_{26}.

B_{26}	Double delta wing fuselage, 140A/B
C_9	Canopy, 140A
F_8	Body flap, 140A
M_7	OMS pods, 140A
N_{28}	OMS nozzles, 140A
V_8	Vertical tail, 140A
R_5	Rudder, 140A
W_{116}	Double delta wing, 140B
E_{26}	Elevons, 140B

Parametric investigations were limited to angles of attack and sideslip with all orbiter control surfaces at 0° deflection.

INSTRUMENTATION DESCRIPTION

The left side of the orbiter and the external tank and the left hand SRB were extensively instrumented with pressure orifices for measurement of surface static pressure distributions. Additionally, there were clusters of orifices around inter-component attach structure locations on the right hand side of the orbiter and external tank. The orbiter contained 471 operational orifices, of which 83 were clustered around attach structure. The external tank contained 270 operational orifices, of which 127 were clustered around attach structure. The SRB contained 124 operational orifices. A three-tube total pressure rake was installed in the opening between the orbiter and external tank. Tables and sketches defining orifice locations are included in this report. All model pressures were measured by model mounted Scanivalve, Inc., S-type scanivalve modules - twelve in the orbiter, seven in the external tank, and five in the SRB.

Force instrumentation consisted of a six-component internal force balance in both the orbiter and external tank for the LV and LVAP configurations, and a single six-component internal force balance in the orbiter for the attached LVA configuration.

TEST FACILITY DESCRIPTION

The tests were conducted in the Ames 11- by 11-Foot Transonic Wind Tunnel which is a variable density, closed return, continuous flow type. This tunnel has an adjustable nozzle (two flexible walls) and a slotted test section to permit transonic testing over a Mach number range continuously variable from 0.4 to 1.4.

DATA REDUCTION

Data were reduced to coefficient form about body axes using the following reference constants:

S_{REF} = 2.421 ft^2	reference area for force and moment coefficients
ℓ_{REF} = 38.709 in	reference length for moment coefficients
A_1 = 0.07670 ft^2	Orbiter sting cavity
A_2 = 0.21340 ft^2	Orbiter heat shield base
A_3 = 0.08560 ft^2	Orbiter OMS base (2)
A_4 = (see table below)	Orbiter speed brake base
A_{501} = 0.07266 ft^2	Tank sting cavity
A_{502} = 0.44264 ft^2	Tank base
A_{801} = 0.19600 ft^2	SRM nozzle base (2)
A_{802} = 0.16590 ft^2	SRM skirt base (2)

δ_{SB} =	A_4 =
0 deg	0 ft^2
14.92	0.02327
24.92	0.03866
34.92	0.05370
54.92	0.08252
84.92	0.12083

X_{MRP} = 0 in

Y_{MRP} = 0 in

Z_{MRP} = 9.99 in

The incidence angle between the orbiter and the external tank is equal to zero for angle of attack and angle of sideslip. Therefore, the angle of attack, ALPHA, used in the force plots is equal to ALPHAO. Also the angle of sideslip, BETA, used in the force plots is equal to BETAO.

The force and moment data recorded by the orbiter balance for configuration LV and LVAP are identified as RB10XX datasets. Force and moment data recorded by the tank balance for configuration LV and LVAP and by the orbiter balance for LVA (composite) are identified by RB11XX.

The pressure data were recorded for each component. The fourth character in each dataset identifier (i.e. RB1BXX, B for fuselage) represents the individual component. The following list indicates the symbol for each component.

SYMBOL	COMPONENT
B	Orbiter fuselage
C	Orbiter base
E	OMS nozzle
F	Body flap
M	OMS pod outside
L	Lower wing surface
U	Upper wing surface
R	Right vertical tail surface
V	Left vertical tail surface
S	SRM booster
T	External tank
X	SRM nozzle

SYMBOL	COMPONENT
Y	External tank base & SRM booster base
1	Orbiter attach points
2	External tank attach points
3	External tank base rake

REFERENCES

1. Orbiter - Lines and Configuration Control Drawings

2. VL70-000140A, Orbiter Configuration Control Drawing MCR 0200 Baseline

3. VL70-000143A, Lines Control, Vehicle 4 Forward Body - Cabin - Canopy MCR 0200 Baseline

4. VL70-000200, Lines Control, Midbody - Wing - Boot Fairing MCR 200 R3 dated 7-2-73

5. VL70-000145, Lines Control - Aft Body - OMS/RCS Pods. MCR 0200 - R1 baseline

6. VL70-000146A, Lines Control (Vehicle 4) Vertical Tail MCR 0200 Baseline

7. External Oxygen Hydrogen Tank (EOHT) - Lines and Configuration Control Drawings

8. VL78-000041B, External Tank - Configuration Control MCR 0200 Baseline R2

9. VL78-000024A, Structural Assy - External Tank MCR 0200 R2

10. VL78-000031A, Thermal Protection - External Tank, MCR 0200 Baseline

11. Solid Rocket Boosters (SRB) - Lines and Configuration Control Drawings

12. VL77-000036A, SRB Configuration Control MCR 0200 R1

13. VL77-000041, SRB Booster Assy, MCR 0200 R1

14. Integrated Vehicle - Lines and Configuration Control Drawings

15. VL72-000088A, Shuttle Configuration MCR 0200 Baseline R1

16. VL72-000089, SRB-ET-Orbiter Interface Disconnects MCR 0200 Baseline

17. VL72-000075, External Tank to SRB Attach Interface MCR 0074 Baseline

18. Aero Loads Model 47-OTS - Model Fabrication, Assembly and Installation Drawings

19. SS-A00119, Orbiter Assy - .030 Scale Pressure/Loads Model (140A/B Lines)

20. SS-A00120, Assy & Details - EOHT - .030 Scale Pressure/Loads Model (140A Lines)

21. SS-A00121, Orbiter/EOHT Attachments .030 Scale Pressure/Loads Model (140A Lines)

22. SS-A00122, Assy & Details - SRM - .030 Scale Pressure/Loads Model (140A Lines)

23. SS-A00123, Assy & Details - Forebody - .030 Scale Pressure/ Loads Model (140A Lines)

24. SS-A00124, Assy & Details - Aft Fuselage - .030 Scale Pressure/ Loads Model (140A Lines)

25. SS-A00125, Assy & Details - Wing Splice Plate & Cuff - .030 Scale Pressure/Loads Model (140A Lines)

26. SS-A00126, Assy & Details - Vertical Stabilizer - .030 Scale Pressure/Loads Model (140A Lines)

27. SS-A00127, Ames 11-ft x 11-ft Wind Tunnel Installation - .030 Scale Pressure/Loads Model (140A/B Lines)

28. SS-A00128, Ames 9-ft x 7-ft Wind Tunnel Installation - .030 Scale Pressure/Loads Model (140A/B Lines)

29. SS-A00130, Lines Control - Profile VL70-000140A - .030 Scale Pressure/Loads Model (140A/B Lines)

30. W-1104S Sting - Ames MK II 4" Balance (Male End), Ames MK XX 2.5" Balance

31. W-1105S, Sting - Ames MK II 4" Balance (Male End), RI MK I 2.75 Balance

32. W-1106A, Adapter - Ames MK II, 4" Balance (Male & Female)

33. W-1107A, 13.5° Bent Sting Adapter Ames MK II 4" Balance (Male & Female)

34. (DMS-DR-2129), "Airloads Investigation of an 0.030-Scale Model of the Space Shuttle Vehicle 140A/B Launch Configuration (Model 47-OTS) in the ARC 9- by 7-foot Unitary Plan Wind Tunnel for Mach Range 1.55 and 2.2 (IA14B)"

35. (DMS-DR-2130), "Airloads Investigation of an 0.030-Scale Model of the Space Shuttle Vehicle 140A/B Orbiter Configuration (Model 47-O) in the ARC 11-foot Unitary Plan Wind Tunnel for Mach Range 0.6 and 0.9 (OA22A)"

36. (DMS-DR-2131), "Airloads Investigation of an 0.030-Scale Model of the Space Shuttle Vehicle 140A/B Orbiter Configuration (Model 47-O) in the ARC 9- by 7-foot Unitary Plan Wind Tunnel for Mach Range 1.55 and 2.2 (OA22B)"

TABLE I.

TEST : IA-14A

DATE : 9-13-73

TEST CONDITIONS

MACH NUMBER	REYNOLDS NUMBER (per unit length)	DYNAMIC PRESSURE (pounds/sq. ft.)	STAGNATION TEMPERATURE (degrees Fahrenheit)
0.60	4.0×10^6	480	120
0.75	3.75×10^6	540	120
0.85	3.5×10^6	550	120
0.90	3.5×10^6	580	120
0.95	3.25×10^6	610	120
0.975	3.0×10^6	530	120
1.00	3.0×10^6	535	120
1.025	3.0×10^6	540	120
1.05	3.0×10^6	545	120
1.10	3.0×10^6	550	120
1.15	3.0×10^6	575	120
1.25	2.75×10^6	540	120
1.40	2.75×10^6	570	120

BALANCE UTILIZED: LVA: 2.5-in MK XX (ORBITER)
LVAP: 2.5-in MK XX (ORB.), 2.75-in MK I (ET)

	CAPACITY: MK XX	CAPACITY: MK I	ACCURACY: MK XX	ACCURACY: MK I	COEFFICIENT TOLERANCE:
NF	6000	7500			
SF	3000	3750	0.2%	0.2%	
AF	600	700	0.2%	0.2%	
PM					
RM	4000	4000	0.2%	0.2%	
YM					

COMMENTS: Test conditions for LVA and LVAP model configurations

TABLE I. - Concluded.

TEST : IA-14A

DATE : 9-13-73

TEST CONDITIONS

MACH NUMBER	REYNOLDS NUMBER (per unit length)	DYNAMIC PRESSURE (pounds/sq. ft)	STAGNATION TEMPERATURE (degrees Fahrenheit)
0.60	4.0×10^6	480	120
0.75	4.25×10^6	610	120
0.85	4.5×10^6	710	120
0.90	4.5×10^6	750	120
0.95	4.5×10^6	780	120
0.975	4.25×10^6	750	120
1.05	4.25×10^6	790	120
1.10	4.0×10^6	760	120
1.15	3.75×10^6	720	120
1.25	2.75×10^6	735	120
1.40	3.0×10^6	620	120

BALANCE UTILIZED: 2.5-in MK XX (ORB.), 2.75-in MK I (ET)

	CAPACITY: MK XX	CAPACITY: MK I	ACCURACY: MK XX	ACCURACY: MK I	COEFFICIENT TOLERANCE:
NF	6000	7500	0.2%	0.2%	
SF	3000	3750	0.2%	0.2%	
AF	600	700	0.2%	0.2%	
PM					
RM	4000	4000	0.2%	0.2%	
YM					

COMMENTS: Test conditions for LV model config.

TABLE II

TEST: IA 4A

DATA SET/RUN NUMBER COLLATION SUMMARY

DATE: 13 Sept 1973

DATA SET IDENTIFIER	CONFIGURATION	SCHD. α	SCHD. β	CONTROL DEFLECTION δ_e	CONTROL DEFLECTION δ_B	CONTROL DEFLECTION δ_{SB}		NO. OF RUNS	MACH NUMBERS (OR ALTERNATE INDEPENDENT VARIABLE) 0.9	0.975	1.1	1.25							
RB1 × 17	ØI+T12+S12+N25+AT11	B	0	0	0	0			40	93	92	89							
18	↓ +AT11	0	B	↑	↑	↑			41	94	91	90							
24	ØL+T12+S12+N25+AT10	-10	Z						8*										
25		-8	↓						9*										
26		-6	↓						10*										
27		-4	-10						11*										
28		0	Y									38							
29	↓	-10	0									39*							
30	ØL+T12+S12+N25+AT11	0	0	↓	↓	↓							D/62						

TEST RUN NUMBERS

1 7 13 19 25 31 37 43 49 55 61 67 75 76

CN CLM CA CAF CY CYN CBL

COEFFICENTS

α OR β SCHEDULES

$\alpha(B) = \beta(B) = -8, -4, 0, 4, 8$

$\beta(Z) = -10, +10$

IDVAR (1) IDVAR (2) NDV

$\beta(Y) = -10, -8, -6, -4, -2, 0$

MACH (D) = 0.975, 1.0, 1.025

NASA-MSFC-MAF

* FORCE DATA NOT AVAILABLE.

TABLE II - Continued

TEST: IA14A

DATA SET/RUN NUMBER COLLATION SUMMARY

DATE: 13 Sept 1975

DATA SET IDENTIFIER	CONFIGURATION	SCHD.	PARAMETERS/VALUES				NO. OF RUNS	ALPHA (OR ALTERNATE INDEPENDENT VARIABLE)										
		β	M	δ_e	δ_R	δ_{SB}		-10	-8	-6	-4	-2.7	0	2	4	6	8	10
RB1x31	$\phi_1+T_{12}+S_{12}N_{25}+AT_{10}$	A	.9	0	0	0		1*	2*	3*	4*	5	6	7	12	13	14	15
32			1.1					16*	17*	18*	19*	20	21	22	23	24	25	26
33			1.25					27*	28*	29*	30*	31	32	33	34	35	36	37
34	$+AT_{11}$	B	.60						47		48		49		50		51	
35			.75						56		55		54		53		52	
36			.85						42		43		44		45		46	
37			.95						57		58		59		60		61	
38			1.05						63		64		65		66		67	
39			1.15						68		69		70		71		72	
40			1.4						84		85		86		87		88	
41			.60						149		148		147		146		145	
42			.75						140		141		142		143		144	
43			.85						135		136		137		138		139	
44			.90						130		131		132		133		134	
45			.95						125		126		127		128		129	
46			.975						120		121		122		123		124	
47			1.05						115		116		117		118		119	
48			1.10						110		111		112		113		114	

TEST RUN NUMBERS

1 7 13 19 25 31 37 43 49 55 61 67 75 76

IDVAR (1) IDVAR (2) NDV

α OR β SCHEDULES

COEFFICENTS

$\beta(A) = -10$ to $+10$, 2 [illegible]

$\beta(B) = -8, -4, 0, 4, 8$

* FORCE DATA NOT AVAILABLE.

TABLE II - Concluded

TEST: TA14A

DATA SET/RUN NUMBER COLLATION SUMMARY

DATE: 13 Sept. 1973

DATA SET IDENTIFIER	CONFIGURATION	SCHD.	PARAMETERS/VALUES				NO. OF RUNS	ALPHA (OR ALTERNATE INDEPENDENT VARIABLE)										TEST RUN NUMBERS
		β	M	S_0	S_{12}	S_{25}		-8	-4	0	4	8						
RB1x49	$\phi_1+T_{12}+S_{12}N_{25}$	B	1.15	0	0	0		105	106	107	108	109						
50			1.25					95	96	97	98	99						
51			1.40					100	101	102	103	104						

1 7 13 19 25 31 37 43 49 55 61 67 75 76

α OR β SCHEDULES: $\phi(B) = -8, -4, 0, 4,$

COEFFICENTS

IDVAR (1) IDVAR (2) NDV

TABLE III. - MODEL DIMENSIONAL DATA

MODEL COMPONENT: ATTACH STRUCTURE - AT_{10}

GENERAL DESCRIPTION: Attach structure for Integrated Vehicle Configuration 4 per VL72-000088B and VL72-000089, modified as follows: Removed ET-to-SRM aft attach struts (4) and left orbiter to right ET aft attach crossover rod.

MODEL SCALE: 0.030

DRAWING NO.: SEE DESCRIPTION

DIMENSIONS:	FULL SCALE	MODEL SCALE
FORWARD ATTACH		
Orbiter to Tank		
Number of struts	2	2
Diameter - In.	6.000	0.180
Location - In.		
X_O	382.000	11.460
X_T	1078.000	32.340
DRAG LINK ATTACH		
Orbiter to Tank		
Number of struts	2	2
Diameter, In.	15.000	0.450
Location, In.		
X_O	1307.000	39.210
X_T	1859.000	55.770
AFT ATTACH		
Orbiter to Tank		
Number of struts	2	2
Diameter - In.	12.000	0.360
Location - In.		
X_O	1307.000	39.210
X_T	2058.000	61.740
CROSSOVER ROD (RIGHT ORBITER TO LEFT ET)		
Diameter, In.	8.000	0.240
Location - In.		
X_O	1307.000	39.210
X_T	2058.000	61.740

TABLE III. - Continued.

MODEL COMPONENT: ATTACH STRUCTURE - AT_{11}

GENERAL DESCRIPTION: Attach structure, same as AT_{10} except the forward attach struts are rotated to the vertical, and the structure extends from the orbiter but is not attached to the tank.

MODEL SCALE: 0.030

DIMENSIONS:	FULL SCALE	MODEL SCALE
FORWARD ATTACH		
Orbiter to Tank		
Location - In.		
X_o	382.000	11.460
X_T	1133.000	33.990
Clearance, tank to strut - In.	16.667	0.500
DRAG LINK ATTACH		
Orbiter to Tank		
Clearance, tank to strut - In.	8.333	0.250
AFT ATTACH		
Orbiter to Tank		
Clearance, Tank to strut - In.	8.333	0.250
Crossover Rod		
Clearance, tank to strut - In.	8.333	0.250

TABLE III. - Continued.

MODEL COMPONENT: BODY - B_{26}

GENERAL DESCRIPTION: Orbiter Fuselage Configuration 140 A/B

NOTE: B_{26} identical to B_{24} except underside of fuselage refaired to accept W_{116}.

Model Scale = .030

DRAWING NUMBER: VL70-000193
VL70-000140A

DIMENSIONS:	FULL-SCALE	MODEL SCALE
Length (Body Fwd Sta X_o = 238) - in.	1293.3	38.799
Max. Width (at X_o = 1520) - in.	262.0	7.860
Max. Depth (at X_o = 1464) - in.	250.0	7.500
Fineness Ratio	0.26357	0.26357
Area - ft^2		
Max. Cross-Sectional	340.88462	0.30679
Planform		
Wetted		
Base		

TABLE III. - Continued.

MODEL COMPONENT: CANOPY - C_9

GENERAL DESCRIPTION: Configuration 3A

Model Scale = .030

DRAWING NUMBER VL70-000140A
VL70-000143A

DIMENSION:	FULL SCALE	MODEL SCALE
Length (X_o=434.643 to 670)	235.357	7.06071
Max Width (@ X_o=513.127)	152.412	4.57236
Max Depth (@ X_o=485.0)	25.000	0.75000
Fineness Ratio		
Area		
Max Cross-Sectional		
Planform		
Wetted		
Base		

TABLE III. - Continued.

MODEL COMPONENT: ELEVON - E_{26}

GENERAL DESCRIPTION: Configuration 4

NOTE: VL70-000400 data for (1) of (2) sides. Identical to E_{25} except airfoil thickness

Model Scale = .030

DRAWING NUMBER: VL70-000200
VL70-000140 B

DIMENSIONS:	FULL-SCALE	MODEL SCALE
Area	223.5814	0.20122
Span (equivalent)	368.34	11.05020
Inb'd equivalent chord	119.623	3.58869
Outb'd equivalent chord	55.1922	1.65577
Ratio movable surface chord/ total surface chord		
At Inb'd equiv. chord	0.2096	0.2096
At Outb'd equiv. chord	0.4004	0.4004
Sweep Back Angles, degrees		
Leading Edge	0.00	0.00
Tailing Edge	-10.056	-10.056
Hingeline	0.00	0.00
Area Moment (Normal to hinge line)	851.1502	0.76604

TABLE III. - Continued.

MODEL COMPONENT: Body Flap - F_8

GENERAL DESCRIPTION: Configuration 4

Model Scale - .030

DRAWING NUMBER VL70-000140B, VL70-000200

DIMENSION:	FULL SCALE	MODEL SCALE
Length in.	84.7	2.541
Max Width in.	262.308	7.86924
Max Depth in.	23.000	0.69000
Fineness Ratio		
Area - ft^2		
Max Cross-Sectional		
Planform	158.85350	0.14297
Wetted		
Base	41.89642	0.03771

TABLE III. - Continued.

MODEL COMPONENT: OMS POD - M_7

GENERAL DESCRIPTION: Configuration 3A

Model Scale = .030

DRAWING NUMBER VL70-000140A
VL70-000145

DIMENSION:	FULL SCALE	MODEL SCALE
Length (OMS Fwd Sta X_o=1233.0) - IN.	327.000	9.810
Max Width (@ X_o=1450.0) - IN.	94.5	2.8350
Max Depth (@ X_o=1493.0) - IN.	109.000	3.270
Fineness Ratio		
Area		
Max Cross-Sectional		
Planform		
Wetted		
Base		

TABLE III. - Continued.

MODEL COMPONENT: BSRM NOZZLES - N_{25}

GENERAL DESCRIPTION: Configuration 3A BSRM Nozzles

Model Scale = .030

DRAWING NO. VL72-000088A
VL77-000036A

DIMENSIONS	FULL-SCALE	MODEL SCALE
MACH NO. _____		
DIAMETER DEX ~ IN (One Nozzle)	141.3	4.2390
DIAMETER DT ~ IN		
DIAMETER DIN ~ IN		
ON ~ DEGREES		
AREA - FT^2 (One Nozzle)		
MAX CROSS-SECTIONAL	108.89595	0.09801

GIMBAL ORIGIN	X_o	Y_o	Z_o
LEFT NOZZLE ~ IN. F.S.	1825.3	-243	400
RIGHT NOZZLE ~ IN. FS	1825.3	+243	400

NULL POSITION - DEG.	PITCH	YAW
LEFT NOZZLE	±8	±8
RIGHT NOZZLE	±8	±8

TABLE III. - Continued.

MODEL COMPONENT: NOZZLES - N_{28}

GENERAL DESCRIPTION: Configuration 3A OMS Nozzle

Model Scale = .030

DRAWING NO. VL70-000140A

DIMENSIONS	FULL-SCALE	MODEL SCALE
MACH NO. _____		
DIAMETER DEX ~ IN (One nozzle)	_____	_____
DIAMETER DT ~ IN	_____	_____
DIAMETER DIN ~ IN	_____	_____
ON ~ DEGREES	_____	_____
AREA - Ft^2 (one nozzle)		
MAX CROSS-SECTIONAL	_____	_____

GIMBAL ORIGIN	X_o	Y_o	Z_o
LEFT NOZZLE ~ IN.	1518.0	-88.0	492.0
RIGHT NOZZLE ~ IN.	1518.0	+88.0	492.0

NULL POSITION	PITCH	YAW
LEFT NOZZLE (Null Pitch 15°49'; Yaw 12°17' OUTB'D)	±8°	13°17' OUTB'D 2°30' INB'D
RIGHT NOZZLE (Null Pitch 15°49'; Yaw 12°17' OUTB'D)	±8°	13°17' OUTB'D 2°17' INB'D

TABLE III. - Continued.

MODEL COMPONENT: RUDDER - R5

GENERAL DESCRIPTION: 2A, 3 and 3A Configuration per Rockwell Lines VL70-000095

Model Scale = .030

DRAWING NUMBER: VL70-000095

DIMENSIONS:	FULL-SCALE	MODEL SCALE
Area - FT^2	106.38	0.03574
Span (equivalent) - IN.	201.0	6.0300
Inb'd equivalent chord	91.565	2.74755
Outb'd equivalent chord	50.832	1.52499
Ratio movable surface chord/ total surface chord		
At Inb'd equiv. chord	0.400	0.400
At Outb'd equiv. chord	0.400	0.400
Sweep Back Angles, degrees		
Leading Edge	34.83	34.83
Tailing Edge	26.25	26.25
Hingeline	34.83	34.83
Area Moment (Normal to hinge line)- FT^3 Product of Area and Mean Chord	526.13	0.01420

TABLE III. - Continued.

MODEL COMPONENT: BOOSTER SOLID ROCKET MOTOR - S_{12}

GENERAL DESCRIPTION: Configuration 3A, Data for (1) of (2) sides, per Rockwell Lines VL77-000036A

Model Scale = .030

DRAWING NUMBER VL72-000088A VL77-000036A

DIMENSION:	FULL SCALE	MODEL SCALE
Length (Includes Nozzle) - IN.	1741.0	52.2300
Max Width (Tank Dia) - IN.	142.3	4.2690
Max Depth (Aft Shroud) - IN.	192.0	5.7600
Fineness Ratio	9.06771	9.06771
Area - FT^2		
Max Cross-Sectional	201.06193	0.18096
Planform		
Wetted		
Base		
WP of BSRM Centerline (Z_T) - IN.	400	12.000
FS of BSRM Nose (X_T) - IN.	200	6.000

TABLE III. - Continued.

MODEL COMPONENT: EXTERNAL TANK - T12

GENERAL DESCRIPTION: External Oxygen Hydrogen Tank

NOTE: Identical to T11 with external fuel lines added

Model Scale = .030

DRAWING NUMBER VL78-000031A
VL78-000041A

DIMENSION:	FULL SCALE	MODEL SCALE
Length - IN. (Nose @ X_T = 309)	1865	57.629
Max Width (Dia) - IN.	324	9.72
Max Depth		
Fineness Ratio	5.75617	5.75617
Area - FT^2		
Max Cross-Sectional	572.555	17.177
Planform		
Wetted		
Base		
WP of Tank Centerline (X_T) - IN.	400.0	

TABLE III. - Continued.

MODEL COMPONENT: VERTICAL - V_8

GENERAL DESCRIPTION: Configuration 3A

NOTE: Similar to V5 with radius on TE upper corner and LE lower corner where vertical meets fuselage.

Model Scale = .030

DRAWING NUMBER: VL70-000140A
VL70-000146A

DIMENSIONS:	FULL-SCALE	MODEL SCALE
TOTAL DATA		
Area (Theo) Ft^2	413.253	0.37193
Planform		
Span (Theo) In	315.720	9.47160
Aspect Ratio	1.675	1.675
Rate of Taper	0.507	0.507
Taper Ratio	0.40399	0.40399
Sweep Back Angles, degrees		
Leading Edge	45.00	45.00
Trailing Edge	25.947	25.947
0.25 Element Line	41.130	41.1300
Chords:		
Root (Theo) WP	268.500	8.05500
Tip (Theo) WP	108.470	3.25410
MAC	199.80756	5.99423
Fus. Sta. of .25 MAC	1463.50	43.9050
W. P. of .25 MAC	635.522	19.06566
B. L. of .25 MAC	0.00	0.00
Airfoil Section		
Leading Wedge Angle Deg	10.00	10.00
Trailing Wedge Angle Deg	14.920	14.920
Leading Edge Radius (Min) - IN.	2.00	0.060
Void Area	13.17	0.01185
Blanketed Area	0.00	0.00

TABLE III. - Concluded.

MODEL COMPONENT: WING-W_{116}

GENERAL DESCRIPTION: Configuration 4

NOTE: Identical to W_{114} except airfoil thickness. Dihedral angle is along trailing edge of wing.

Model Scale = .030

TEST NO.

DWG. NO. VL70-000140B VL70-000200

DIMENSIONS:	FULL-SCALE	MODEL SCALE
TOTAL DATA		
Area (Theo.) Ft^2		
Planform	2690.00	2.4[illegible].0
Span (Theo In.	936.6816	28.10045
Aspect Ratio	2.265	2.265
Rate of Taper	1.177	1.177
Taper Ratio	0.200	0.200
Dihedral Angle, degrees(at X_o=1506.623,Y_o=	3.500	3.500
Incidence Angle, degrees 105, Z_o= 282.75)	0.500	0.500
Aerodynamic Twist, degrees	+3.000	+3.000
Sweep Back Angles, degrees		
Leading Edge	45.00	45.00
Trailing Edge	-10.056	-10.056
0.25 Element Line	35.209	35.209
Chords:		
Root (Theo) B.P.0.0.	689.2429	20.67729
Tip, (Theo) B.P.	137.8486	4.13546
MAC	474.8117	14.24435
Fus. Sta. of .25 MAC	1126.721	33.80163
W.P. of .25 MAC	291.00	8.73000
B.L. of .25 MAC	187.33491	5.62005
EXPOSED DATA		
Area (Theo) Ft^2	1812.2205	1.63010
Span, (Theo) In. BP108	736.6816	22.10045
Aspect Ratio	2.058	2.058
Taper Ratio	0.2451	0.2451
Chords		
Root BP108	570.6230	17.11869
Tip 1.00 $\frac{b}{2}$	137.8512	4.13554
MAC	354.2376	10.62713
Fus. Sta. of .25 MAC	1164.237	34.92711
W.P. of .25 MAC	292.00	8.76000
B.L. of .25 MAC	239.67786	7.19034
Airfoil Section (Rockwell Mod NASA) XXXX-64		
Root $\frac{b}{2}$ = 0.425	0.113	0.113
Tip $\frac{b}{2}$ = 1.00	0.12	0.12
Data for (1) of (2) Sides		
Leading Edge Cuff		
Planform Area Ft^2	118.333	0.10650
Leading Edge Intersects Fus M. L. @ Sta	505.0	15.15000
Leading Edge Intersects Wing @ Sta	1003.5	30.10500

TABLE IV. - ORBITER FUSELAGE PRESSURE ORIFICE LOCATIONS

	ORBITER X_o IN.			RADIAL LOCATION Ø DEGREES																		
	FULL	MODEL	Xo/lo	o	20	40	55	70	90	105	110	120	135	140	150	151	156	162	165	169	174	180
	235	7.05	0	6																		
	245	7.35	.008	7					8													9
	265	7.95	.023	10	11	12	13	14	15			16			17							18
	295	8.85	.047	19	20	21	22	23	24			25			26							27
	325	9.75	.070	28	29	30	31	32	33			34			35							36
	380	11.40	.112	37	38	39	40	41	42			43			44							45
	440	13.20	.159																		46	
	450	13.50	.167	47	48	49	50	51	52			53					54			55		56
	465	13.95	.178													57		58				
	500	15.00	.205	59	60	61	62	63	64			65		66	67				68			69
	560	16.80	.252	70		71		72	73			74			75				76			77
	625	18.75	.301	78		79		80	81			82			83				84			85
	725	21.75	.379	86		87		88	89			90			91				92			93
	880	26.40	.499	94		95		96	97			98			99				100			101
	980	29.40	.576	102		103																
	1080	32.40	.653	104		105		106	107			108			109				110			111
	1180	35.40	.730	112		113		114	115			116			117							118
	1245	37.35	.781	119		120		121	122	123		124	125		126				127			128
	1300	39.00	.823	129		130		131	132	133		134	135		136							137
	1375	41.25	.882	138		139		140	141	142		143	144		145				146			
	1430	42.90	.923	147		148		149	150	151		152	153		154				155			
	1480	44.40	.963	156		157		158	159	160		161	162		163				164			
a	1530	45.90	1.002								165	166										
b	1530	45.90	1.002								167	168										
	1555	46.65	1.021	169		170																
c	1590	47.70	1.048	171		172																
d	1590	47.70	1.048	173		174																

ℓo = 1293.3 full scale

ℓ_o = 38.799 model

a: OMS pod, inside

b: OMS pod, outside

c: Body flap lower surface

d: Body flap upper surface

data in datasets RB1BXX

TABLE V. - ORBITER WING PRESSURE ORIFICE LOCATIONS

ORBITER WING

ORBITER B.P.$\sim Y_o$			X/C ~ LOCAL WING CHORD																																											
FULL	MODEL	D		0	.02	.04	.05	.08	.081	.084	.094	.150	.163	.170	.229	.246	.250	.274	.362	.390	.400	.402	.497	.55	.565	.60	.65	.70	.725	.75	.760	.775	.808	.836	.85	.857	.865	.90	.905	.95	.955	.965
140	4.20	.299	U	179			180				181				182				183									185						186			187	188				189
			L.E.																																											
			L				190				191				192				193				195					195						196			197	198				199
170	5.10	.364	U	200		201				202						204[1]				205[2]																						
			L.E.																																											
			L			206				207			208			209				210																						
200	6.00	.427	U	211	212[3]	213[4]				214				215				216				217									219		220			221			222		223	
			L.E.																																											
			L		224[3]	225[4]				226				227				228				229			230						231		232			233			234		235	
250	7.50	.534	U	236	237		238	239				240					241				242			243					244			245			246			247		248		
			L.E.																																											
			L		249		250	251				252					253				254			255					256			257			258			259		260		
315	9.45	.673	U	261	262		263					264					265				266			267				268				269			270				271			
			L.E.																																											
			L		272		273					274					275				276			277				278				279			280				281			
365	10.95	.780	U	282	283		284					285					286										287			288					289					290		
			L.E.																																											
			L		291		292					293					294										295			296					297					298		
415	12.45	.887	U	299	300		301					302					303				304					305				306								307				
			L.E.																																											
			L		308		309					310					311				312					313				314								315				

1 X/c = .19
2 X/c = .34
3 X/c = .03
4 X/c = .045

data in data sets RB1LXX (lower surface and RB1UXX (upper surface)

TABLE VI. - ORBITER VERTICAL TAIL PRESSURE ORIFICE LOCATIONS

ORBITER VERTICAL TAIL

VERTICAL $W_L \sim Z_o$				X/C_V								
FULL	MODEL	η_V		0	.025	.05	.15	.30	.52	.685	.775	.90
550	16.50	.158	RH	316		324	325	326	327	328	329	
			LE									
			LH		317	318	319	320	321	322	323	
600	18.00	.316	RH	330		339	340	341	342	343	344	345
			LE									
			LH		331	332	333	334	335	336	337	338
690	20.70	.600	RH	346		355	356	357	358	359	360	361
			LE									
			LH		347	348	349	350	351	352	353	354
765	22.95	.840	RH	362		371	372	373	374	375	376	377
			LE									
			LH		363	364	365	366	367	368	369	370
792	23.76	.925	RH	378		387	388	389	390	391	392	393
			LE									
			LH		379	380	381	382	383	384	385	386

data in datasets RB1VXX (left side) and RB1RXX (right side)

TABLE VII. - ORBITER BASE, BODYFLAP, AND OMS NOZZLE PRESSURE ORIFICE LOCATIONS

ORBITER BASE

LOCATION	ORIFICE NUMBER
Orbiter Sting Cavity	1
Orbiter Base (Lower Left Corner)	2
OMS Nozzle Base	3

data in datasets RB1CXX

RUDDER FLARE BASE

RUDDER $W_L \sim Z_o$		X/C_V
FULL	MODEL	.75
725	18.75	4
625	21.75	5

data in datasets RB1CXX

BODY FLAP

ORBITER $\sim X_o$		$\emptyset \sim$ Deg	
FULL	MODEL	0	40
1555	46.65	169	170
		Upper	
1590	47.70	173	174
		Lower	
1590	47.70	171	172

data in datasets RB1FXX

LEFT OMS NOZZLE SURFACE

X ~ IN. FWD. NOZZLE EXIT		$\emptyset \sim$ DEG.		
FULL	MODEL	135	180	225
10	.30	175	176	177
20	.60		178	

data in datasets RB1EXX

TABLE VIII. - EXTERNAL TANK PRESSURE ORIFICE LOCATIONS

EXTERNAL TANK

TANK STATION ~ X_T			Ø ~ DEG.									
FULL SCALE	MODEL SCALE	$\frac{X_T}{\ell_T}$	0	30	60	90	120	135	150	165	180	270
309	9.27	0	503									
324	9.72	.008	504			505					506	507
400	12.00	.049	508	509	510	511	512		513		514	
520	15.60	.113	515	516	517	518	519		520	521	522	
640	19.20	.178	523	524	525	526	527		528	529	530	
670	20.10	.194	531	532	533	534	535		536	537	538	
710	21.30	.215	539	540	541	542	543		544	545	546	
760	22.80	.242	547	548	549	550	551	552	553	554	555	
850	25.50	.290	556	557	558	559	560		561	562	563	564
950	28.50	.344	565	566	567		568	569	570	571	572	
1050	31.30	.394	573	574	575	576	577		578	579	580	
1150	34.50	.451	581	582	583	584	585	586	587	588	589	
1250	37.50	.505	590	591	592	593	594		595	596	597	
1350	40.50	.558	598	599	600	601	602	603	604	605	606	
1500	45.00	.638	607	608	609	610	611		612	613	614	
1700	51.00	.746	615	616	617	618	619	620	621	622	623	
1900	57.00	.853	624	625	626	627	628	629	630	631	632	
2040	61.20	.928	633	634	635		636	637	638	639	640	
TANK BASE STING CAVITY			501								502	

ℓ_T = 1865 IN. FULL SCALE
55.950 IN. MODEL SCALE

data in datasets RB1TXX

TABLE IX. - SRM PRESSURE ORIFICE LOCATIONS

LEFT SRM

SRM STATION ~ X_s			Ø ~ DEG.							
FULL SCALE	MODEL SCALE	$\frac{X_s}{\ell_s}$	0	45	90	135	180	225	270	315
200	6.00	0	805							
260	7.80	.034	806	807	808	809	810	811	812	813
370	11.10	.098	814	815	816	817	818	819	820	821
400	12.00	.115	822	823	824	825	826	827		828
450	13.50	.144	829	830	831	832	833	834	835	836
550	16.50	.201	837	838	839	840	841	842	843	844
700	21.00	.287	845		846		847	848	849	850
850	25.50	.373	851		852		853		854	
1050	31.50	.488	855		856		857			
1250	37.50	.603	858		859		860			
1450	43.50	.718	861		862		863		864	
1650	49.50	.833	865		866		867		868	
1750	52.50	.890	869	870	871	872	873	874	875	876
1796	53.88	.917	877	878	879	880	881	882	883	884
1835	55.05	.939	885	886	887	888	889	890	891	892
1868	56.04	.958	893	894	895	896	897	898	899	900
SKIRT BASE			802			803		804		
NOZZLE BASE			801							
NOZZLE EXTERNAL PRESSURES										
1850	55.50	.948	901	902	903	904	905	906	907	908
1905	57.15	.979	909	910	911	912	913	914	915	916
1928	57.84	.993	917	918	919	920	921	922	923	924

ℓ_s = 1741 IN. FULL SCALE
52.53 IN. MODEL SCALE

data in datasets RB1SXX

TABLE X. - ORBITER ATTACH POINT PRESSURE ORIFICE LOCATIONS

ORBITER ATTACH POINT ORIFICE LOCATIONS

	X_o FULL SCALE		347	357	367	377	387	397	407	1252	1262	1272	1282	1292	1302	1312	1322	1332
	X_o MODEL		10.41	10.71	11.01	11.31	11.61	11.91	12.21	37.56	37.86	38.16	38.46	38.76	39.06	39.36	39.96	40.26
	X_o/ℓ_o		.087	.095	.102	.110	.118	.126	.133	.788	.796	.804	.811	.819	.827	.835	.850	.858
η	F.S. Y_o	MODEL Y_o	394	397					412				436	447		468	474	480
.021	10	.30		396	399	403	407	411	415				435	446	457	467	473	479
.043	20	.60		395	398	402	406	410	414				434	445	456	466	472	478
.064	30	.90				401	405	409	413				433	444	455	465	471	477
.085	40	1.20											432	443	454	464	470	476
.107	50	1.50															469	475
.149	69.75	2.09											431	442	453	463		
.170	79.75	2.39										424	430	441	452	462		
.192	89.75	2.69									419	423	429	440	451	461		
.213	99.75	2.99								416	418	422	428					
.234	109.75	3.29									417	421	427	439	450	460		
.256	119.75	3.59										420	426	438	449	459		
.277	129.75	3.89											425	437	448	458		

data in datasets RB11XX

TABLE XI. - EXTERNAL TANK ATTACH POINT PRESSURE ORIFICE LOCATIONS

X_T Full Scale	1103	1093	1083	1073	1063	1053	1043	
X_T Model Scale	33.09	32.79	32.49	32.19	31.89	31.59	31.29	
X_T/l_T	.424	.419	.413	.408	.402	.397	.391	
								ø DEG.
FWD ATTACH POINT (ORBITER TO E-T)	684	676	668	660				182.84
	685	677	669	661				186.38
	686	678	670	662	655			189.92
	687	679	671	663	656	652		193.46
	688	680			657	653	651	197.0
	689	681	673	665	658	654		200.54
	690	682	674	666	659			204.08
	691	683	675	667				207.62

data in datasets RB12XX

TABLE XI. - EXTERNAL TANK ATTACH POINT PRESSURE ORIFICE LOCATIONS (CONTINUED)

	X_T FULL SCALE	1874	1864	1854	1844	1834	1824	1814	
	X_T MODEL SCALE	56.22	55.92	55.62	55.32	55.02	54.72	54.42	
	X_T/ℓ_T	.839	.834	.828	.823	.818	.812	.807	
									Ø ~ DEG.
		719	713	707					222.84
FWD DRAG LINK ATTACH POINT		720	714	708	701				226.38
		721	715	709	702	696			229.92
		722		710	703	697	693		233.46
					704	698	694	692	237.00
						699	695		240.54
		723	718	712	706	700			244.08

data in datasets RB12XX

TABLE XI. - EXTERNAL TANK ATTACH POINT PRESSURE ORIFICE LOCATIONS

(CONCLUDED)

	X_T FULL SCALE	2078	2068	2058	2048	2038	2028	2018	
	X_T MODEL SCALE	62.34	62.04	61.74	61.44	61.14	60.84	60.54	
	X_T/ℓ_T	.948	.943	.938	.932	.927	.921	.916	
									Ø ∿ DEG.
AFT UPPER ATTACH		777	766	754					234.04
		778	767	755	742				237.58
		779	768	756	743	732			241.12
		780	769		744	733	726		244.66
		781	770		745	734	727	724	248.2
					746	735	728		251.74
			771	759	747	736			255.28
AFT LOWER ATTACH		782	772	760					323.51
		783	773	761	748				327.05
		784	774	762	749	737			330.59
		785	775		750	738	729		334.13
		786	776		751	739	730	725	337.67
					752	740	731		341.21
				765	753	741			344.75

data in datasets RB12XX

Notes:

1. Positive directions of force coefficients, moment coefficients, and angles are indicated by arrows
2. For clarity, origins of wind and stability axes have been displaced from the center of gravity

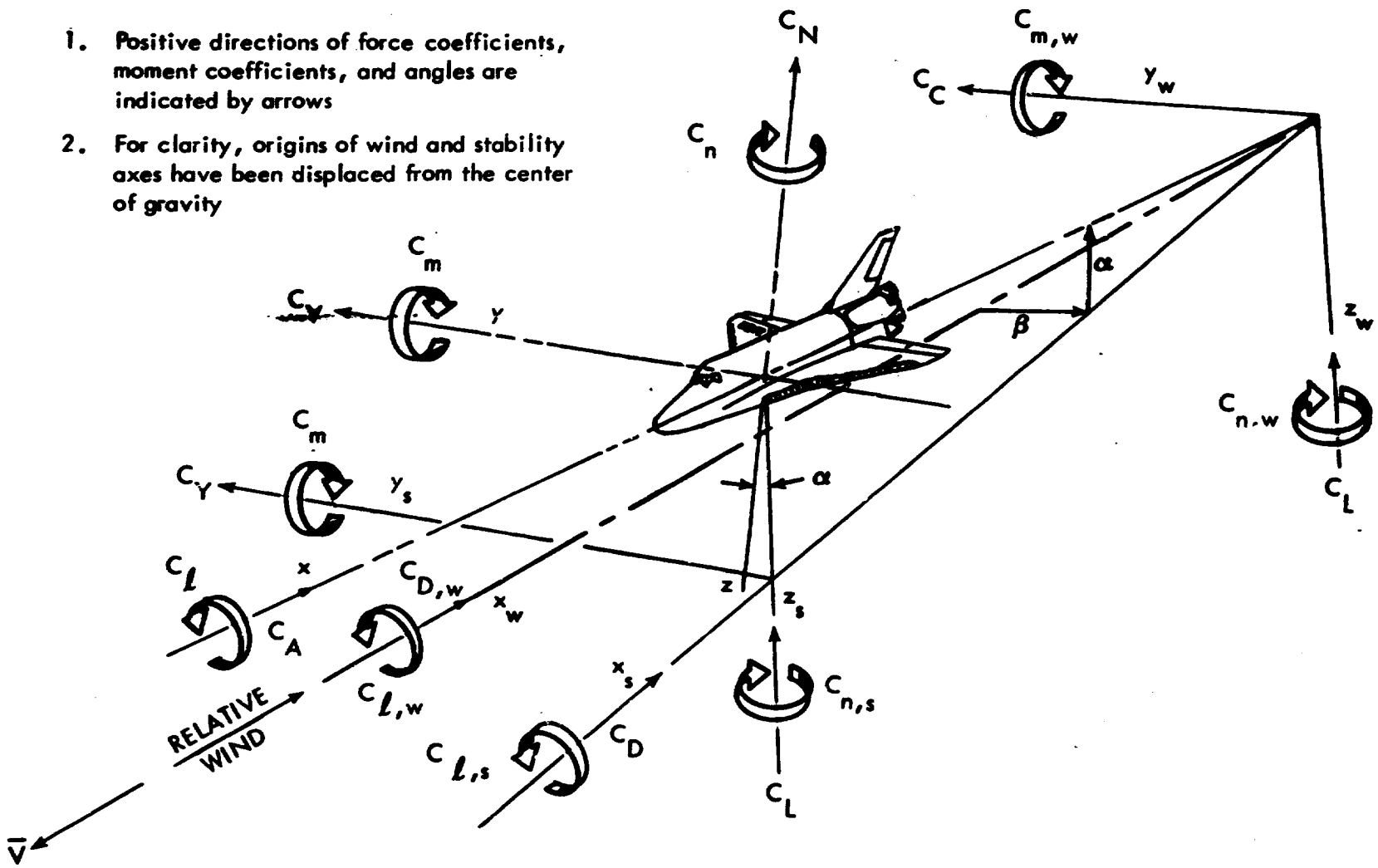

a. Stability and body axis systems

Figure 1. - Axis Systems

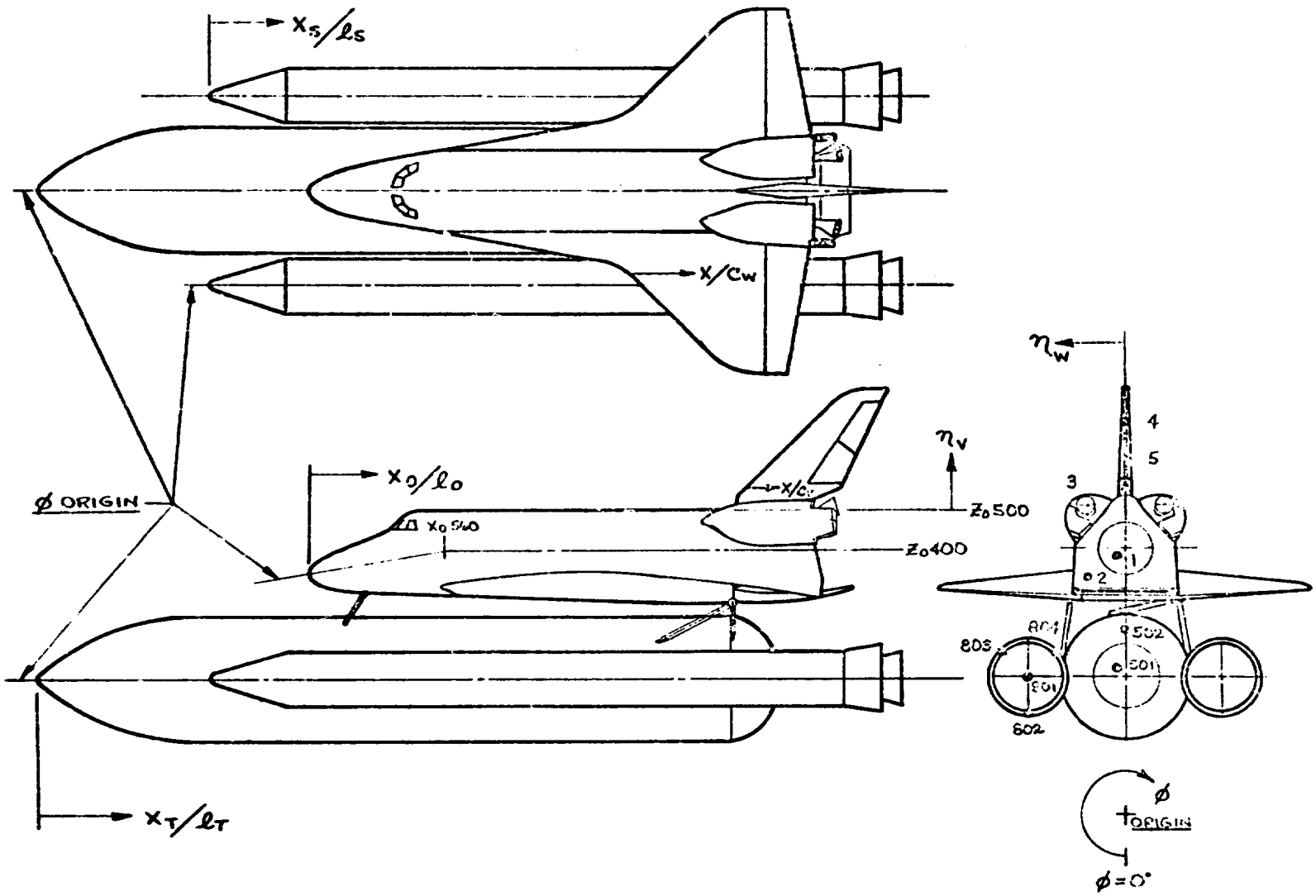

b. Orifice location nomenclature diagram

Figure 1. - Concluded

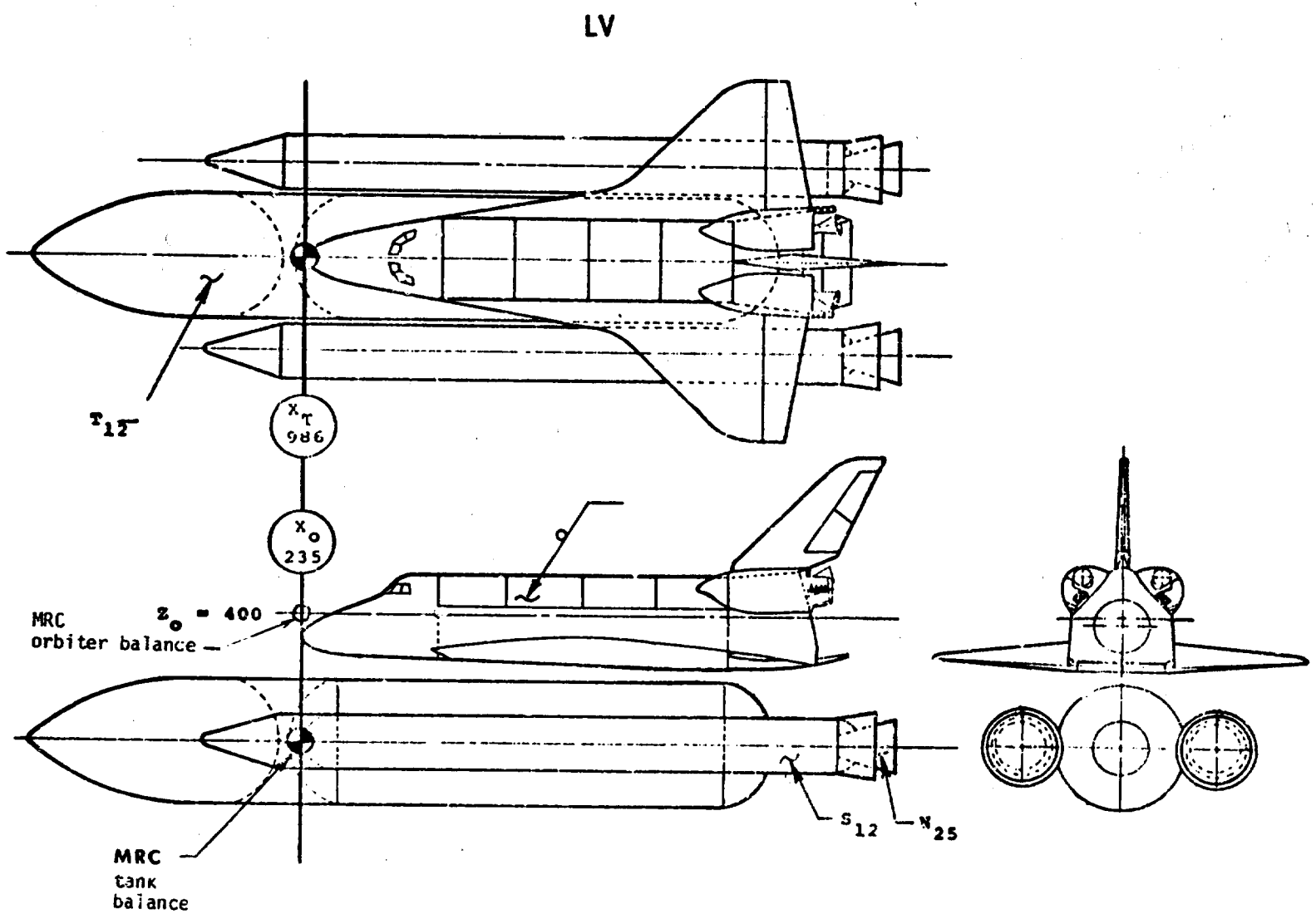

a. Integrated vehicle - 2 balances, no attach structure

Figure 2. - Model Sketches

LVAP

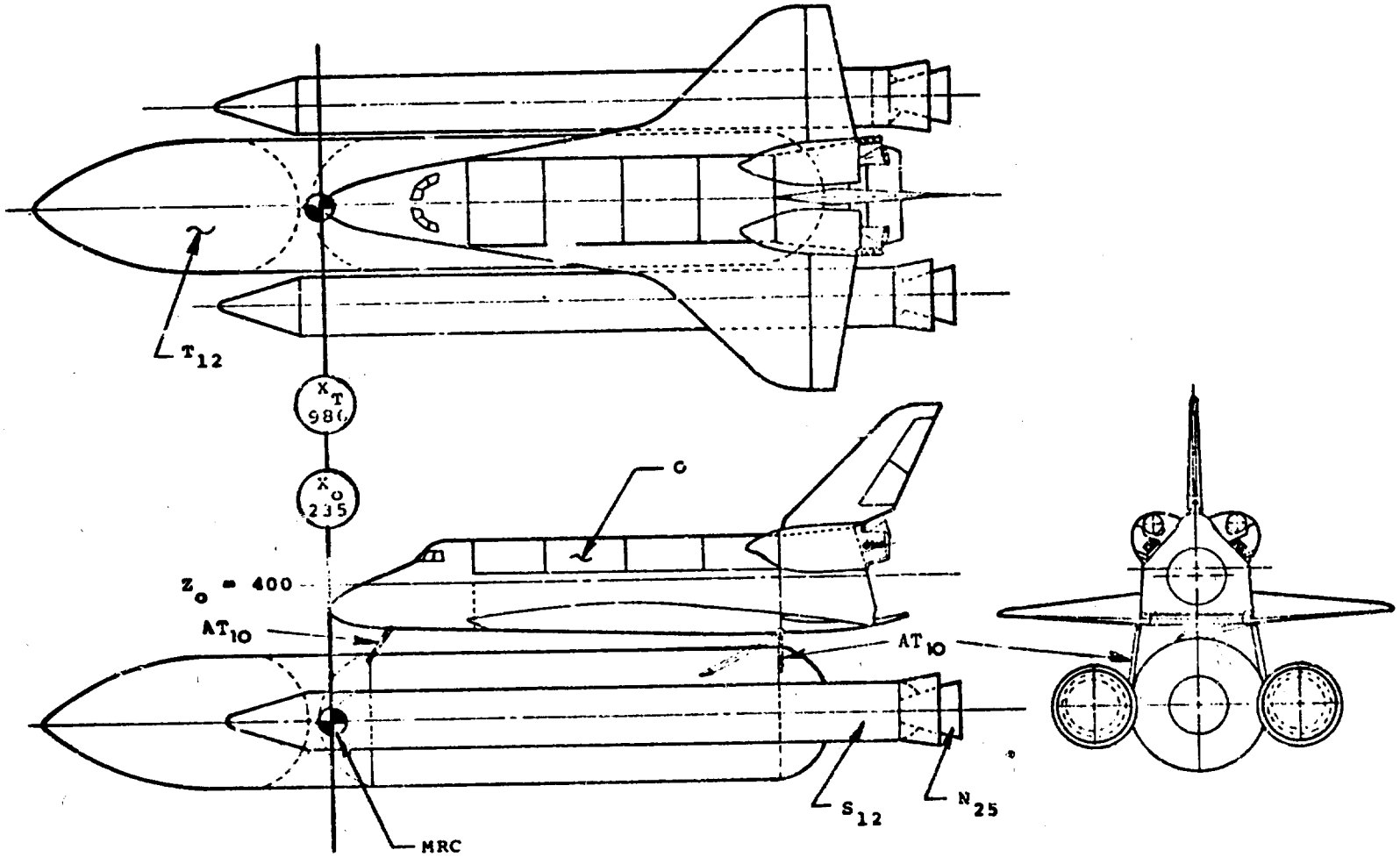

b. Integrated vehicle - 1 balance with attach structure

Figure 2. - Continued

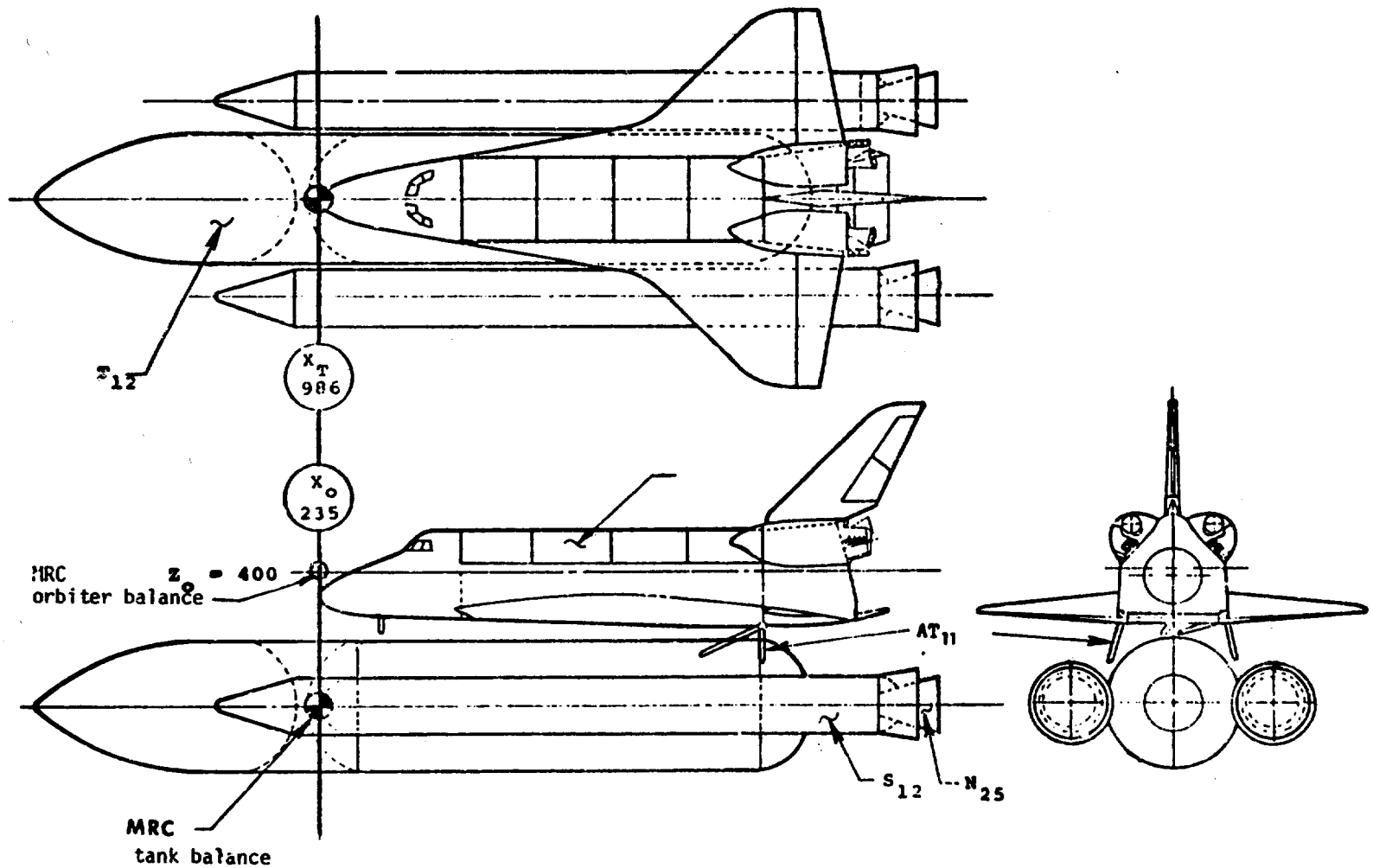

c. Integrated vehicle - 2 balances with attach structure

Figure 2. - Continued

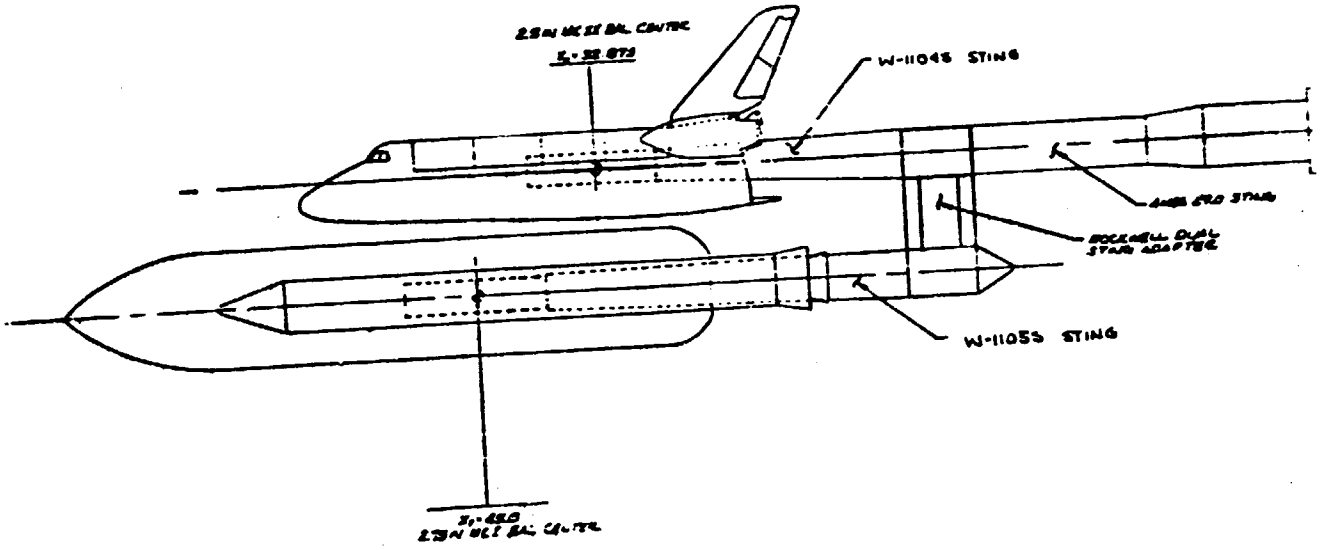

DUAL BALANCE CONFIGURATION ~ LV & LVAP

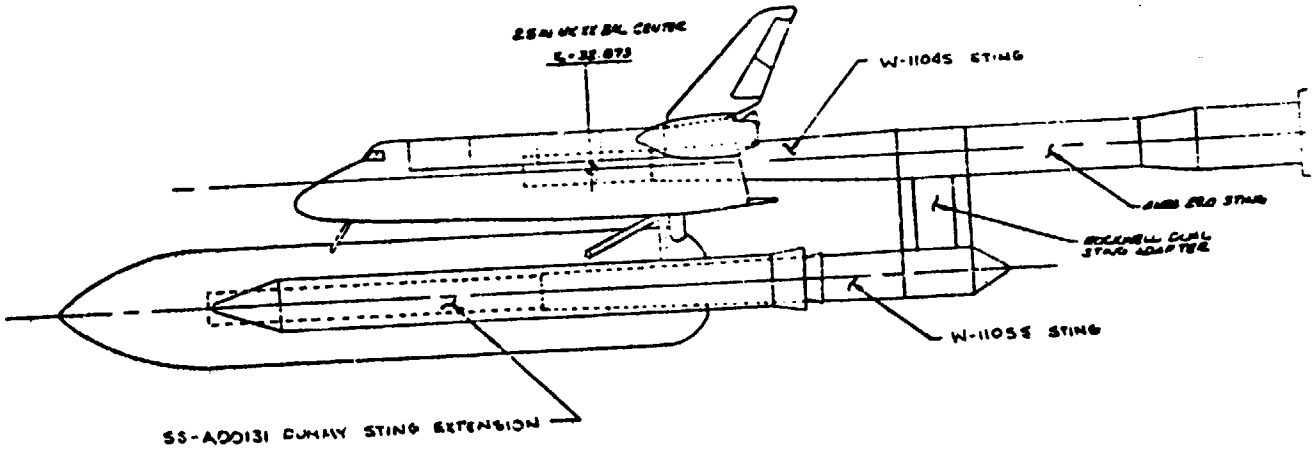

SINGLE BALANCE CONFIGURATION ~ LVA

d. Installation side views

Figure 2. - Continued

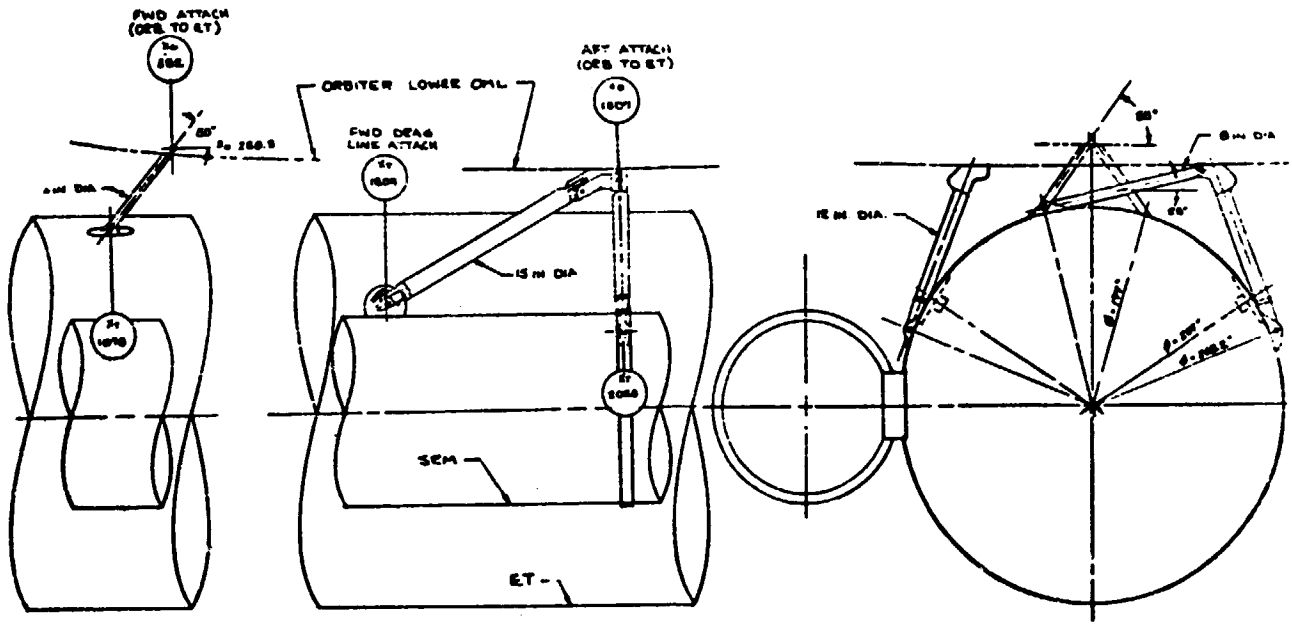

ATTACH HARDWARE CONFIGURATION — AT10

ATTACH HARDWARE CONFIGURATION — AT11

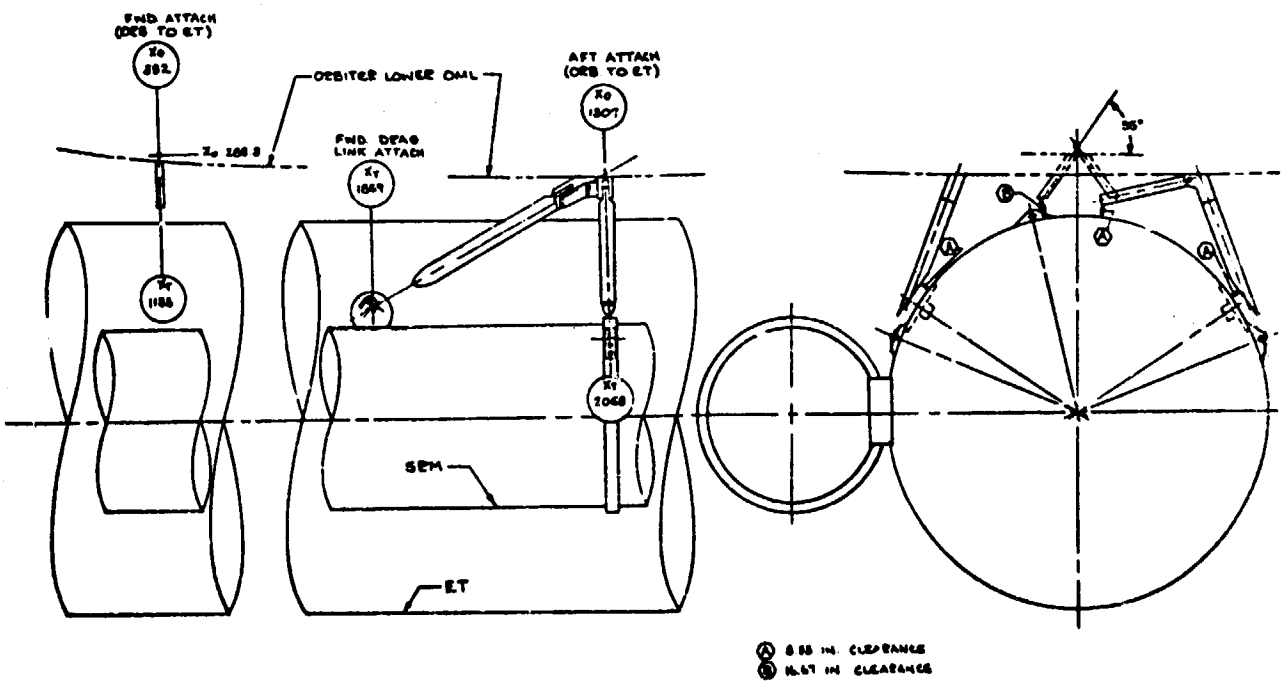

e. Attach hardware

Figure 2. Continued

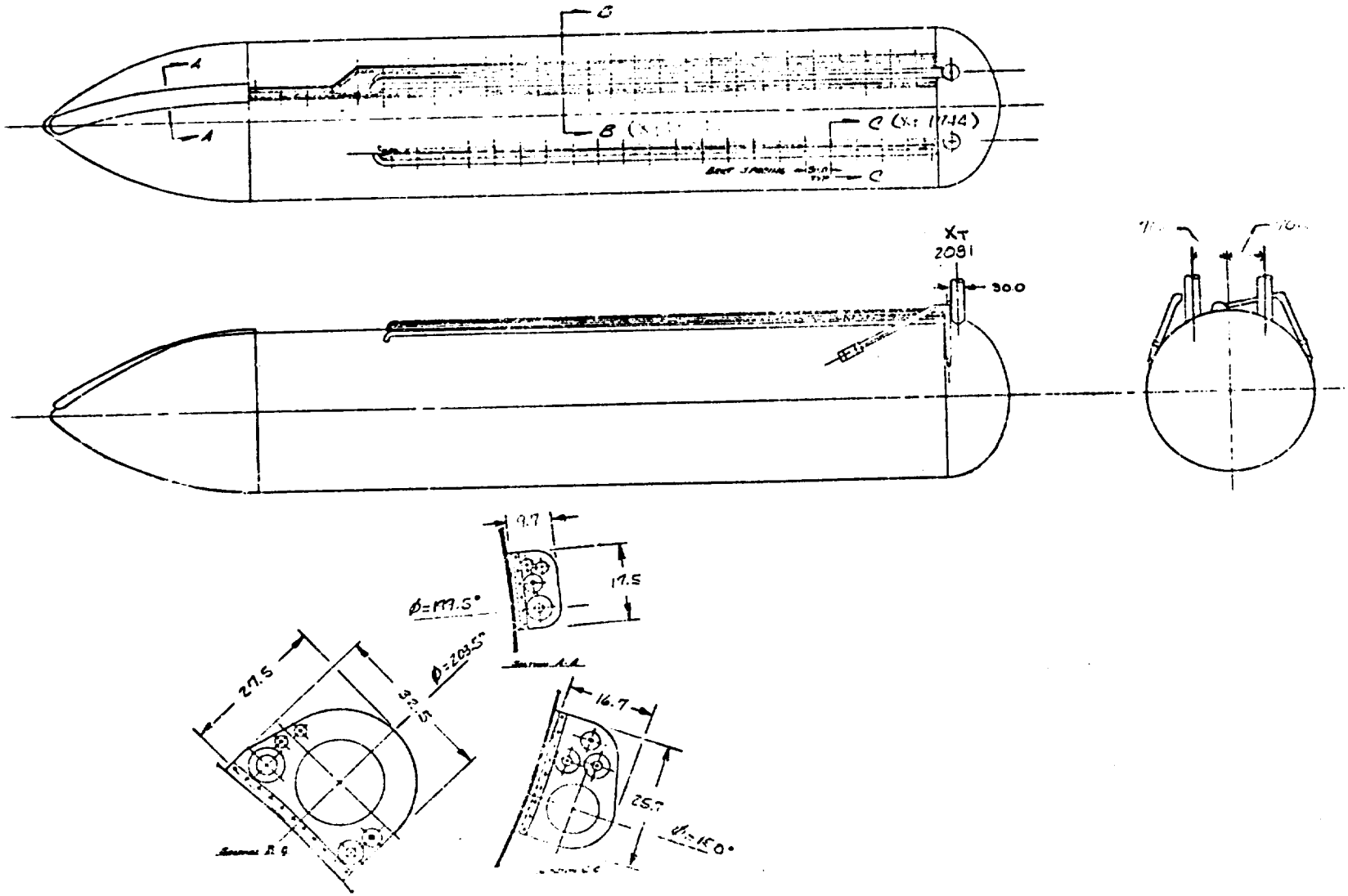

f. External tank protuberances

Figure 2. - Continued

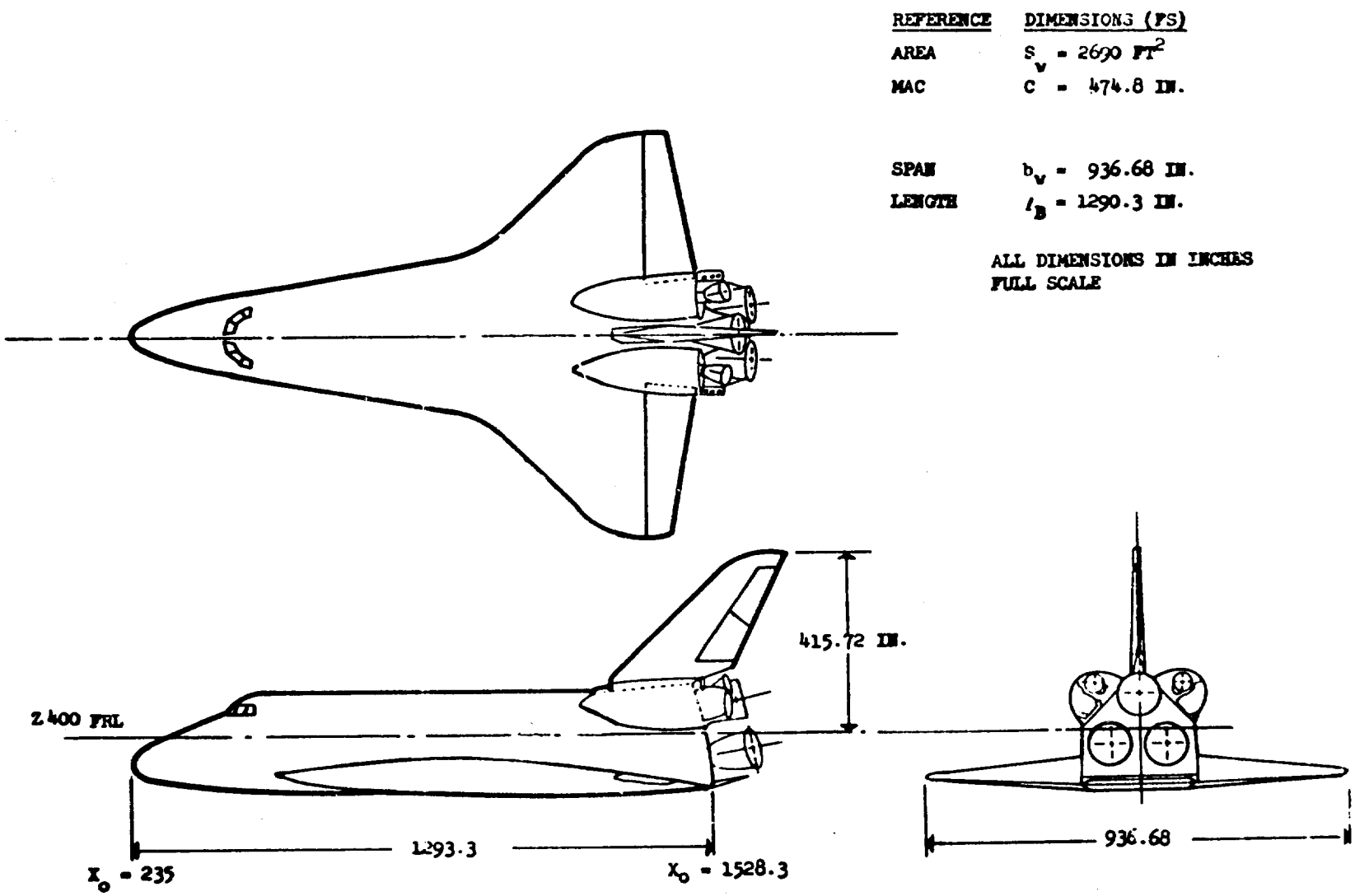

g. SSV orbiter configuration 140A/B

Figure 2. - Continued

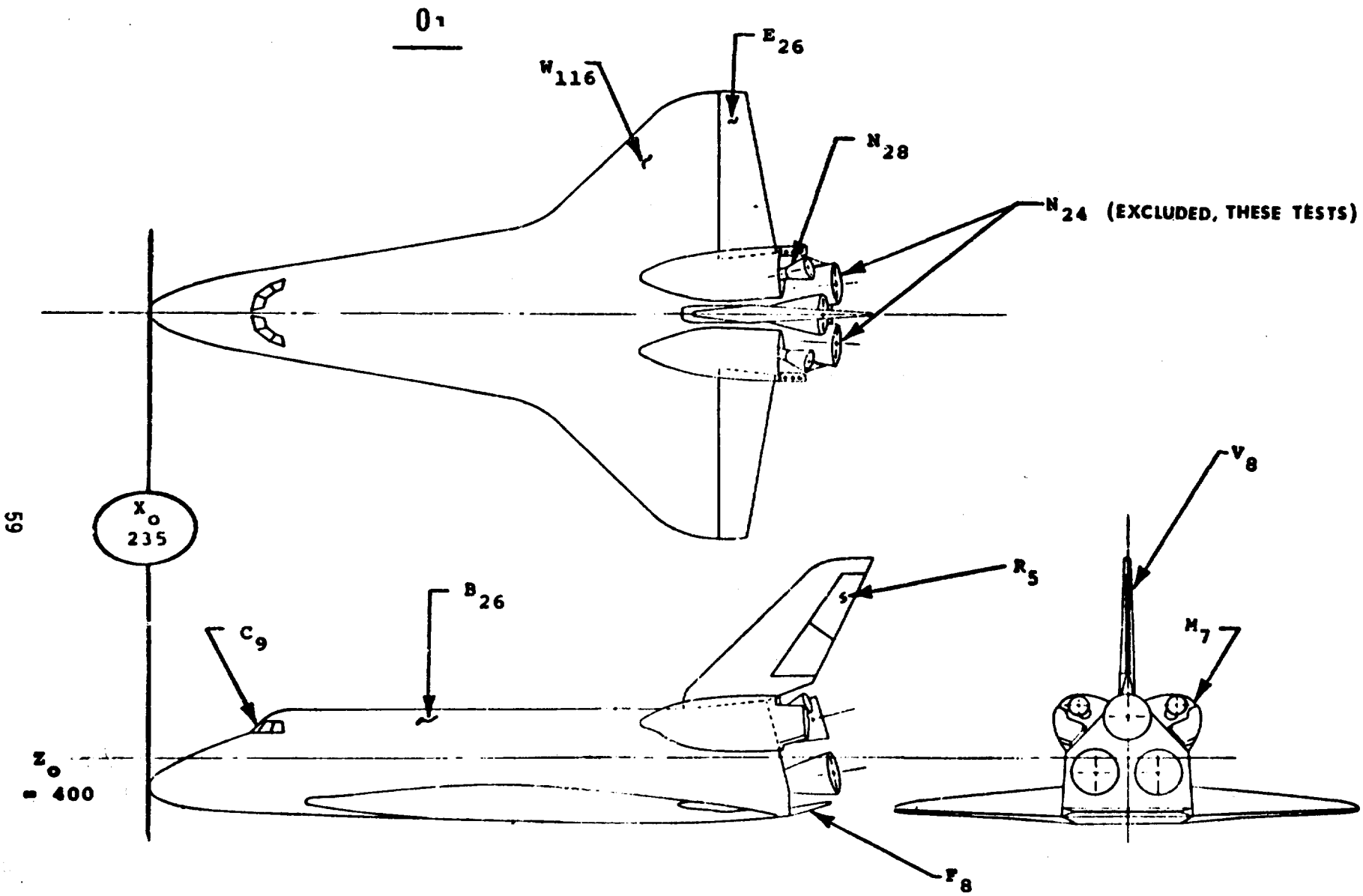

h. Orbiter nomenclature

Figure 2. - Continued

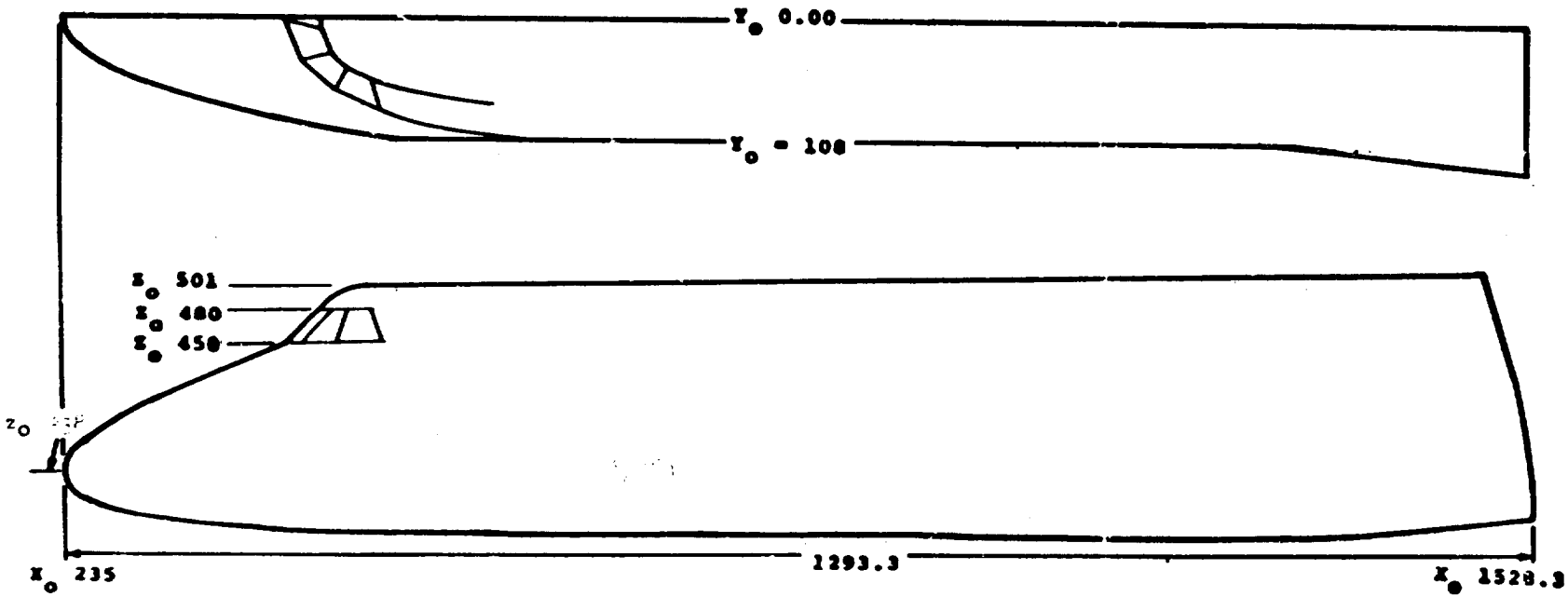

i. Canopy, C_9, and body, B_{26}, lines drawing VL70-00193 and VL70-000140A/B

Figure 2. - Continued

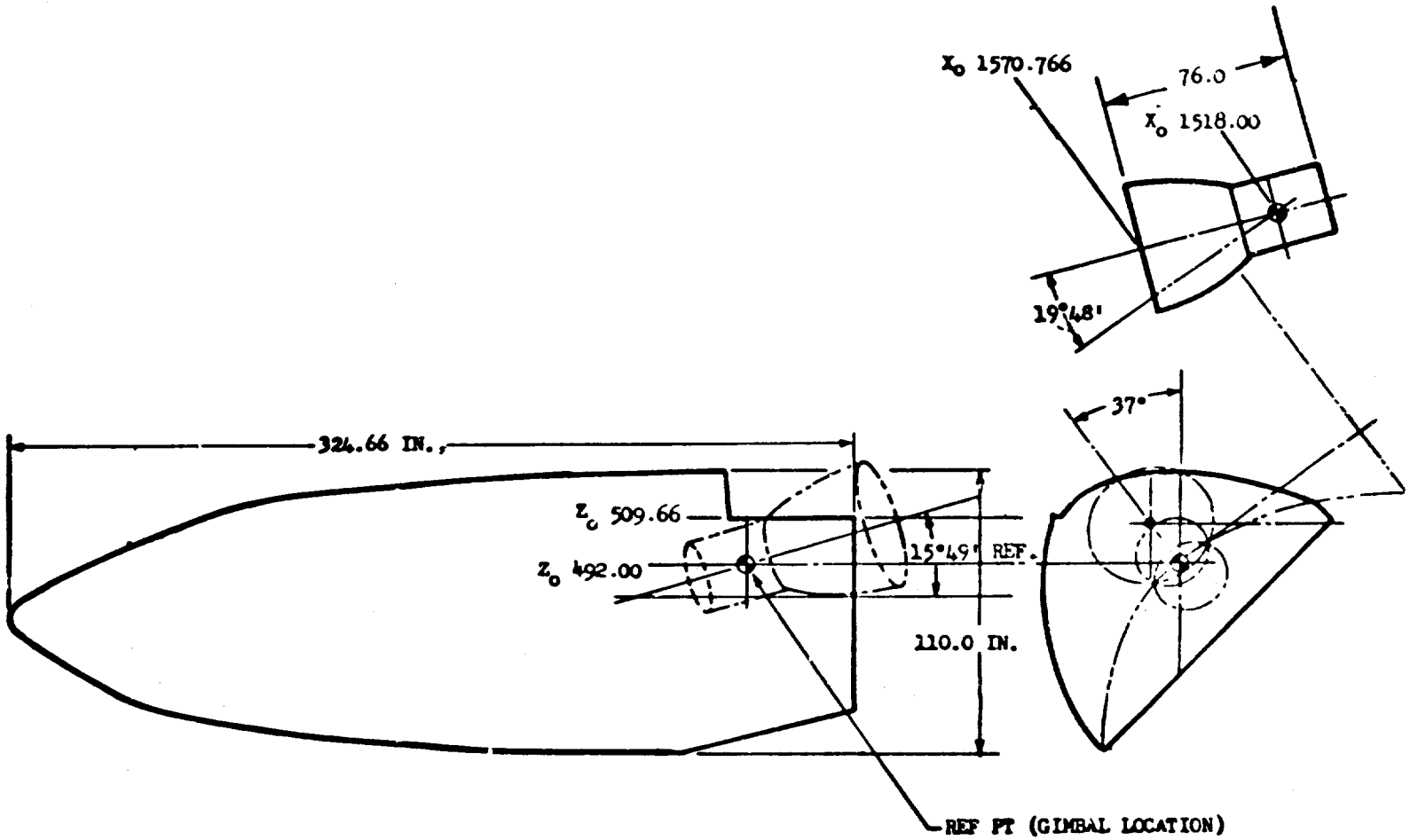

j. M_7 - OMS Pod

Figure 2. - Continued

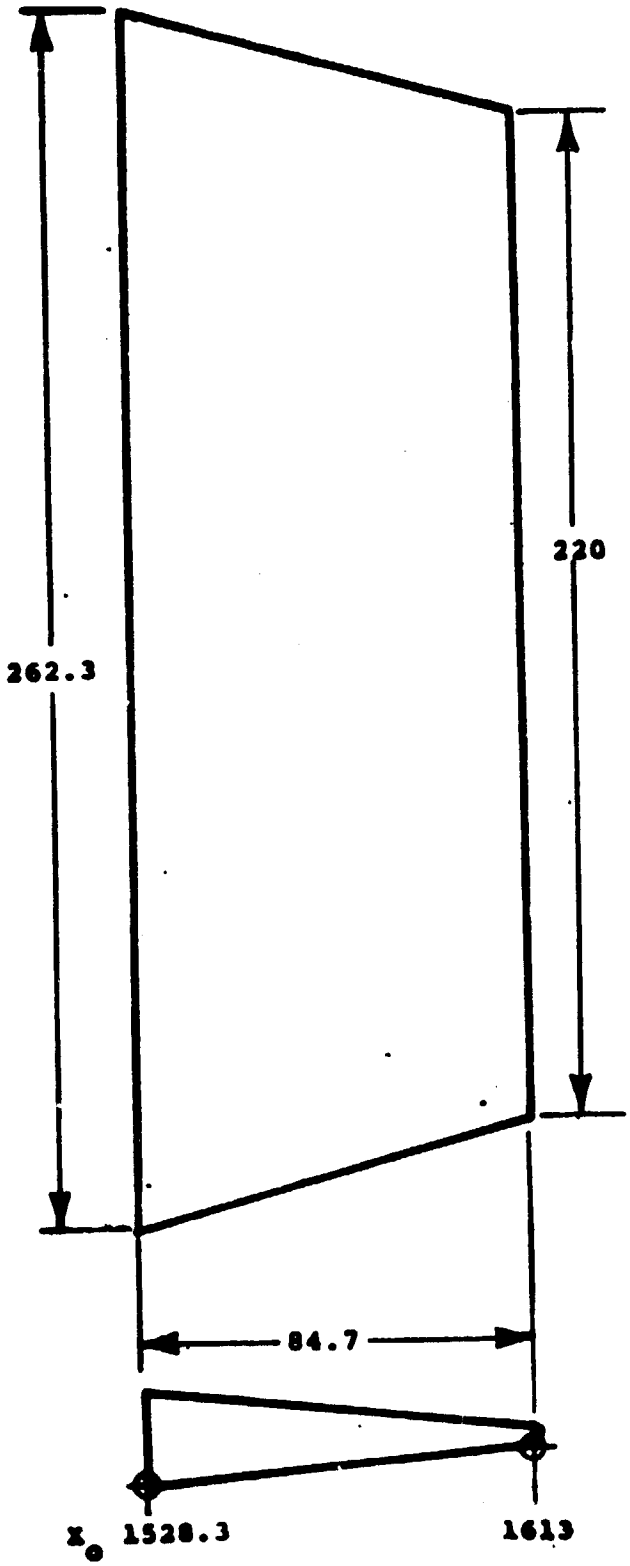

k. Body flap, F_8, lines drawing no. VL70-000140A/B

Figure 2. - Continued

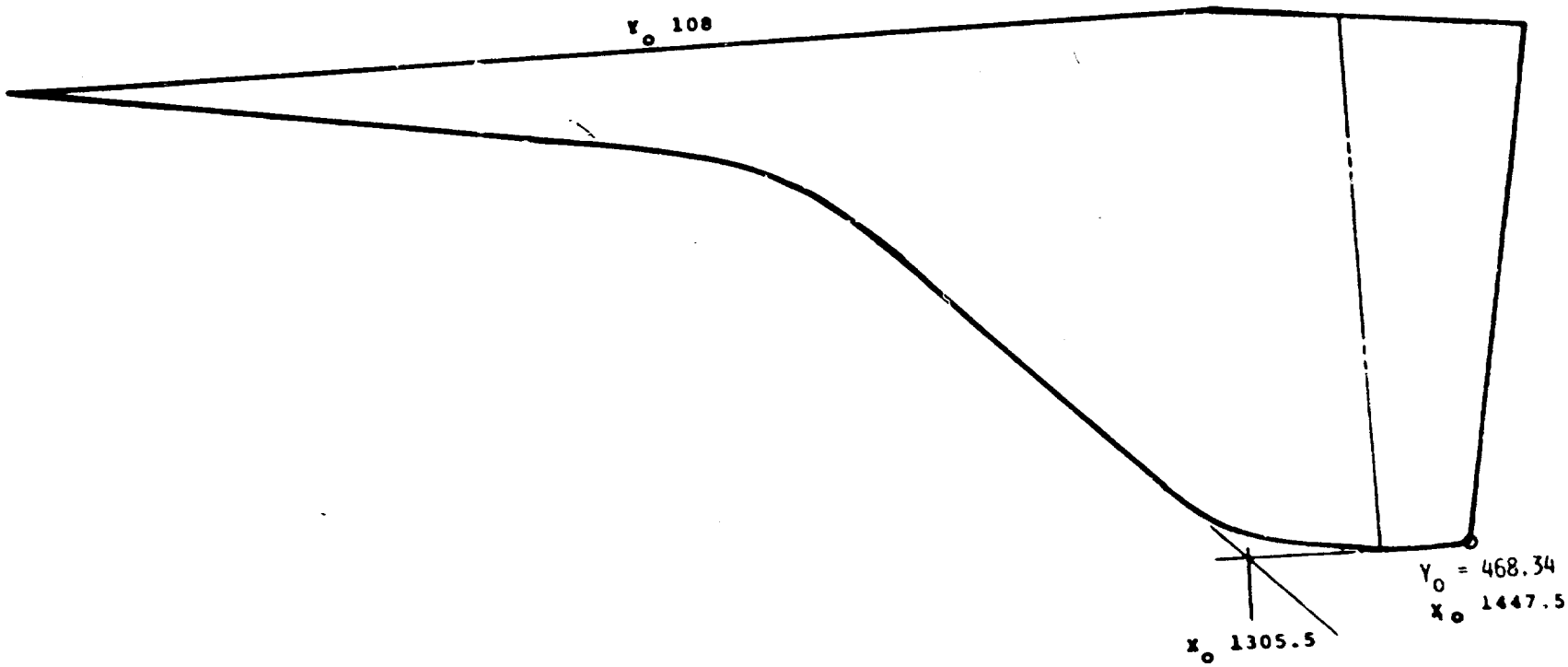

1. Wing, W_{116}, lines drawing no. VL70-000200

Figure 2. - Continued

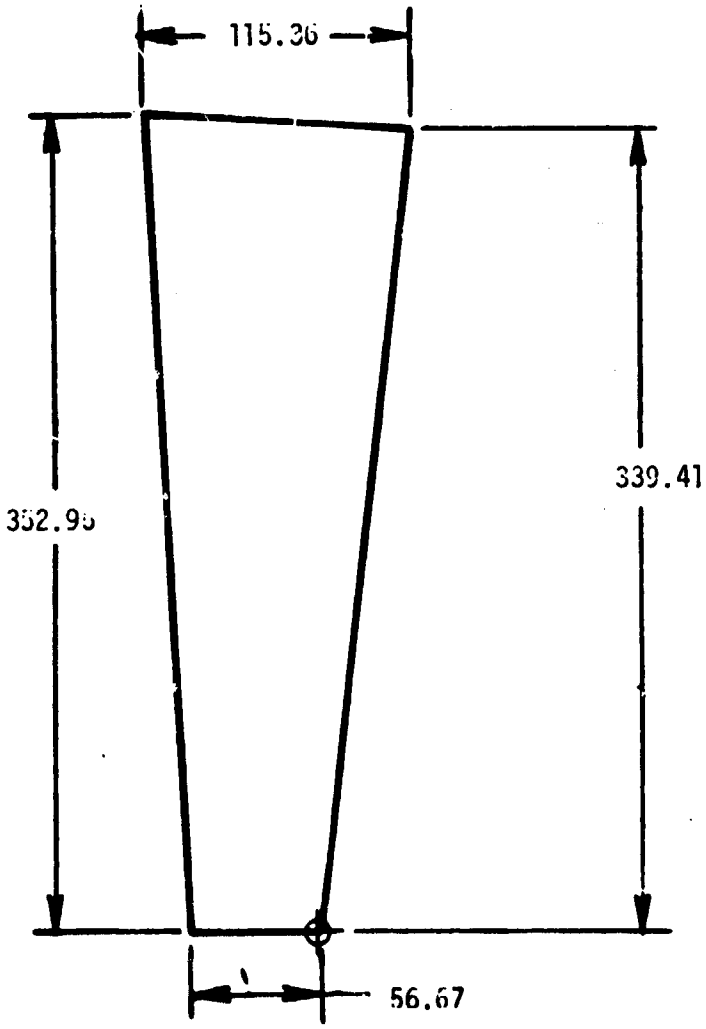

m. Elevon, E_{26}, lines drawing no. VL70-000200, VL70-000140A/B

Figure 2. - Continued

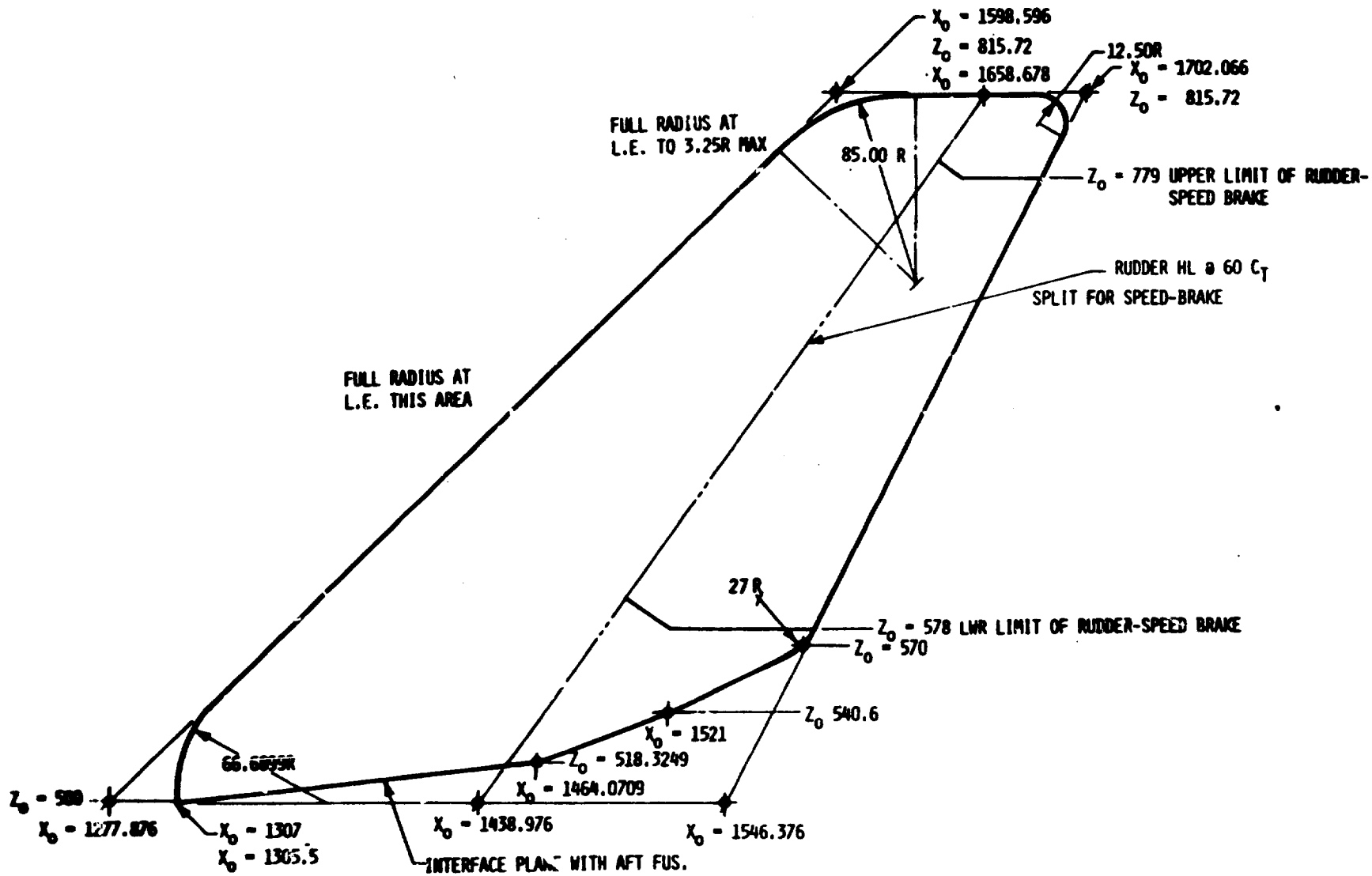

n. Vertical tail, V_8, and rudder, R_5, lines drawing no. VL70-000146A

Figure 2. - Continued

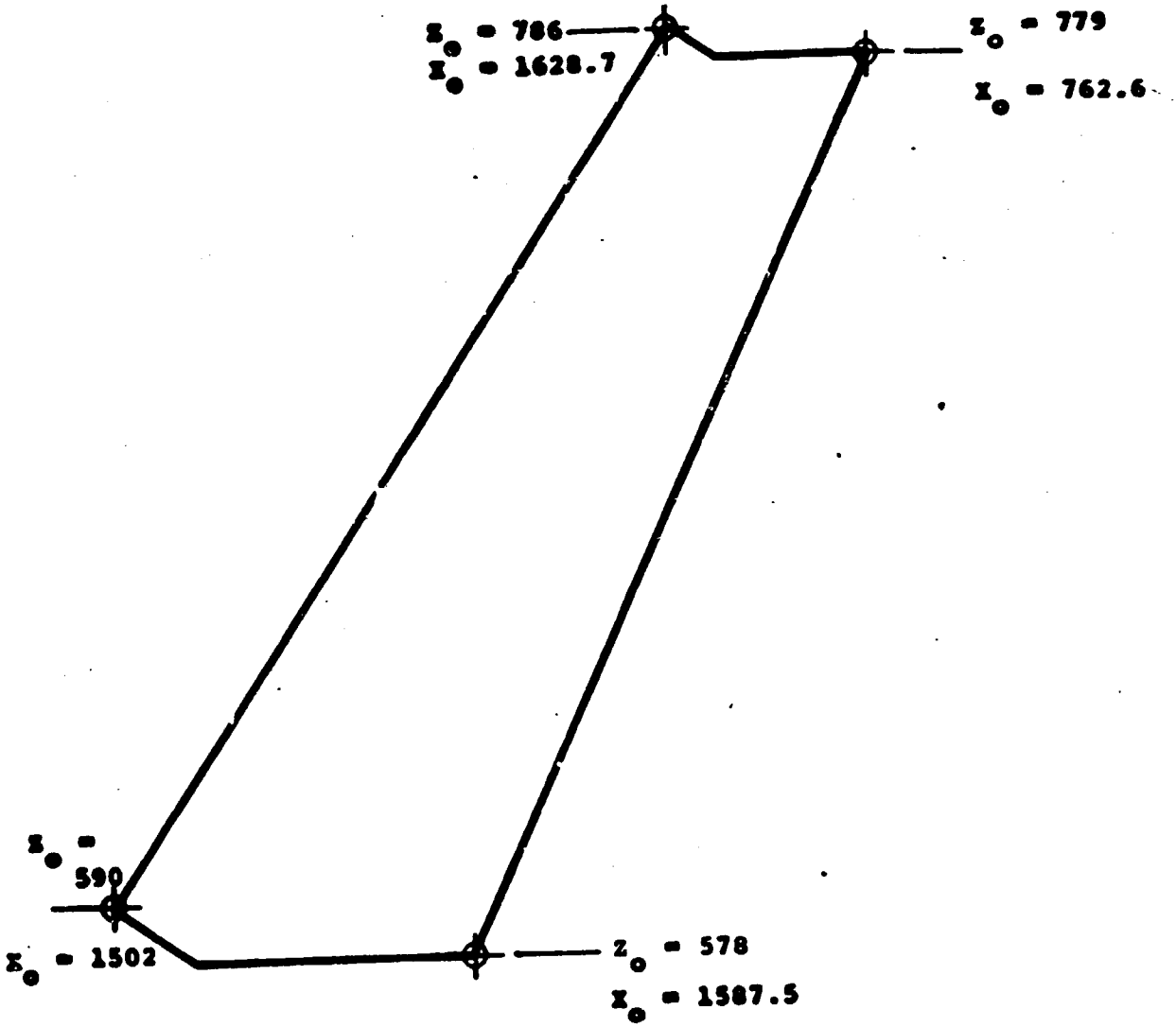

o. Rudder, R_5, lines drawing no. VL70-000095

Figure 2. - Concluded

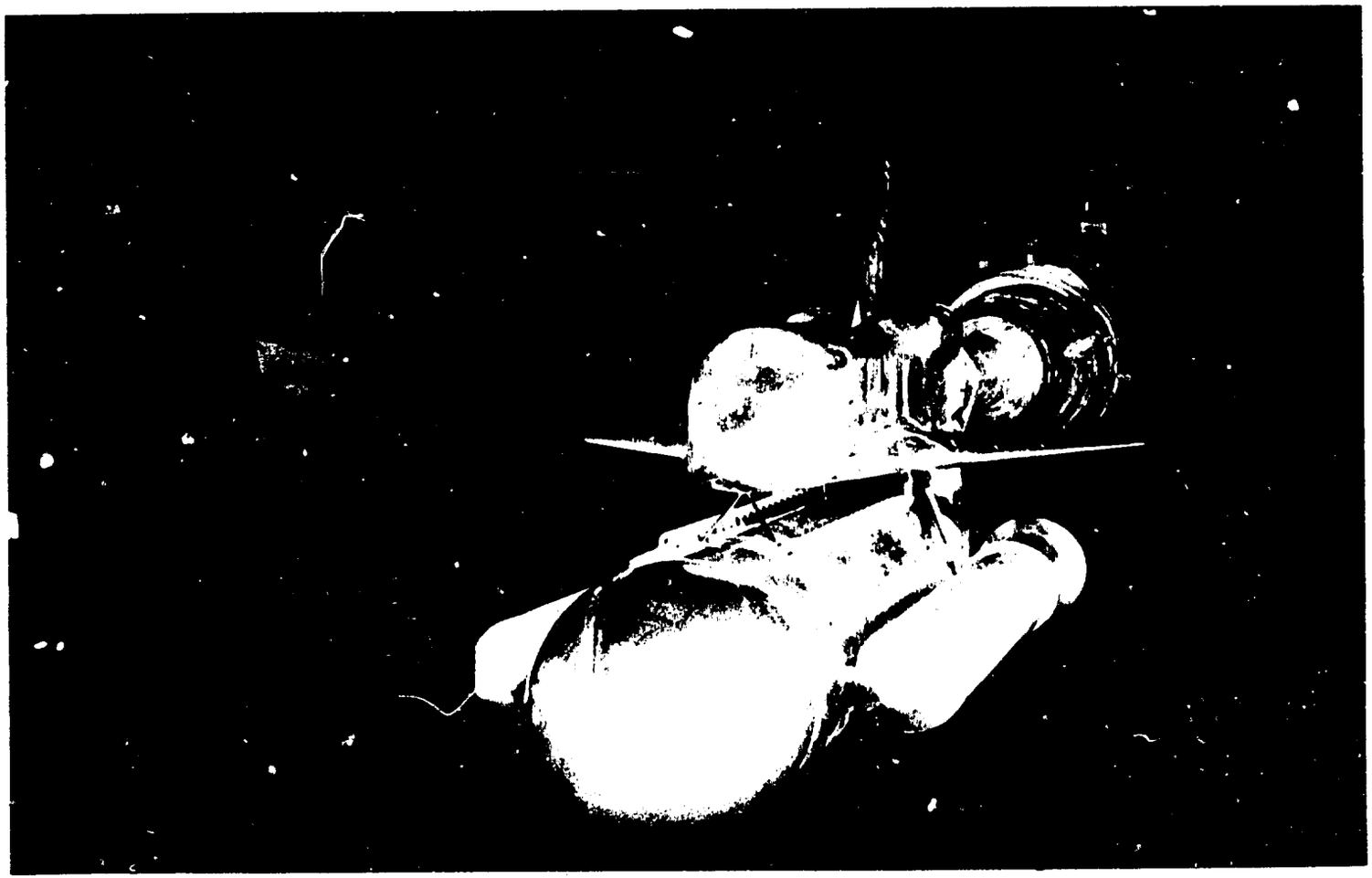

a. Front view of model installed in tunnel

Figure 3. - Model photographs.

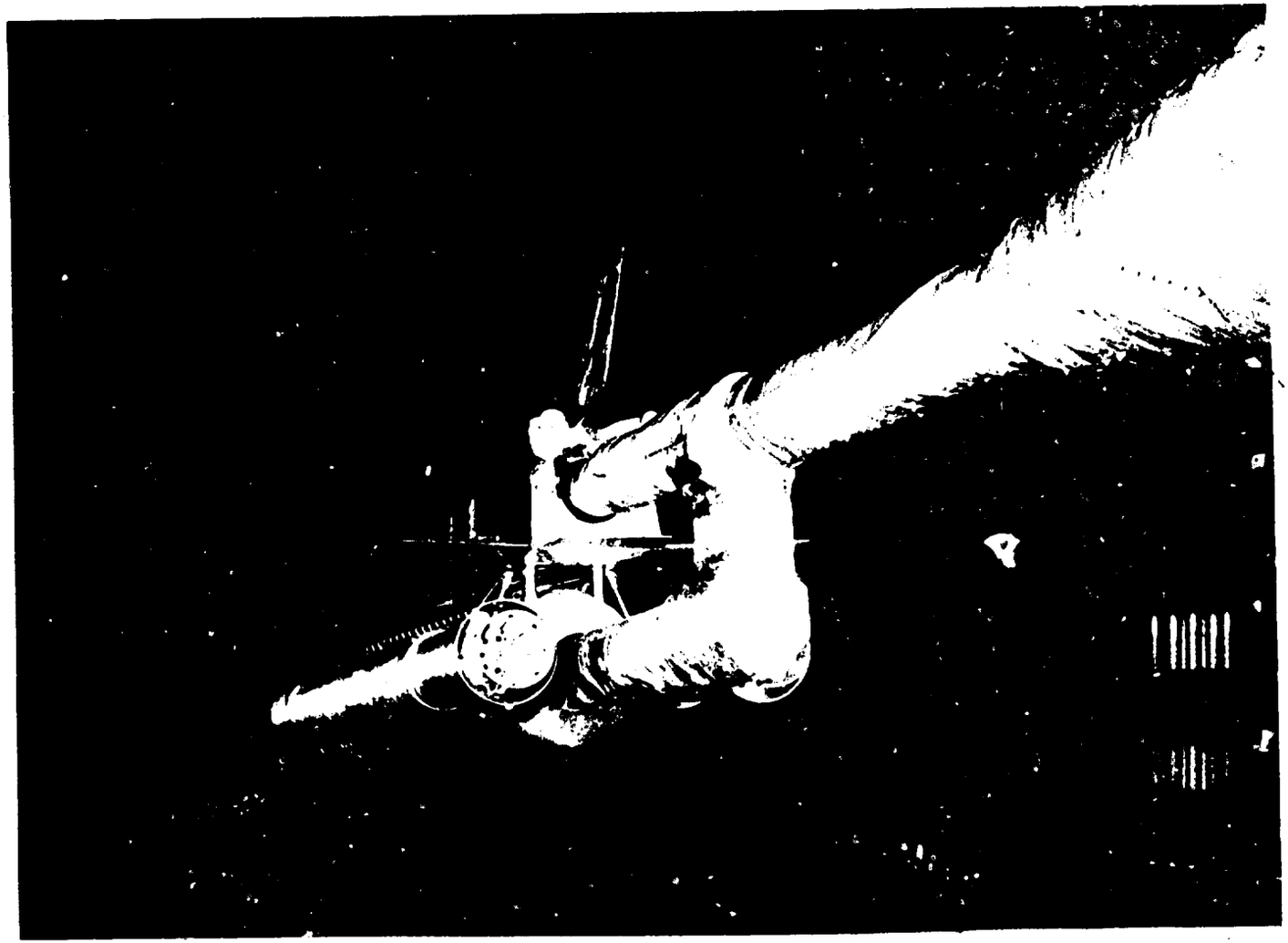

b. Rear view of model installed in tunnel

Figure 3. - Concluded.

TABULATED PRESSURE DATA

ARC11-716 IA14 O1+T12+S12N25+AT11 UPPER WING (RB1U17) (03 OCT 73)

REFERENCE DATA

SREF = 2.4210 SQ.FT. XMRP = 29.5800 INCHES
LREF = 38.7090 INCHES YMRP = .0000 INCHES
BREF = 38.7090 INCHES ZMRP = .0000 INCHES
SCALE = .0300 SCALE

PARAMETRIC DATA

BETAO = .000 ELEVON = .000
RUDDER = .000 SPOBRK = .000

MACH (1) = .898 ALPHAO(1) = -8.170

SECTION (1)UPPER WING DEPENDENT VARIABLE CP

Y/BW	.2990	.3640	.4270	.5340	.6730	.7800	.8870
X/CW							
.000	.0196	.0368	.1918	.1751	.0105	-.1124	-.0653
.020				.4727	.0000	.4186	.3650
.025			.3590				
.040		.1698					
.045			.3161				
.050	.0321			.3120	.3021	.2926	.2307
.080				.1796			
.085			.2295				
.086		.2479					
.094	.0640						
.150				-.0167	-.0142	-.0118	-.0025
.163		.0000					
.177			.0444				
.193		.1820					
.229	.1464						
.250				-.1758	-.2045	-.2427	-.3457
.274			-.0733				
.339		-.0516					
.362	.1454						
.400				-.2083	-.2947		-.4896
.402			-.1716				
.497	.0000						
.550				-.2399	-.3491		
.585			.0000				
.600							-.2513
.650						-.2631	
.700	-.1509				-.1928		
.725				-.1708			
.750						.0672	.0221
.760			-.1811				
.775				.0343	.0441		
.808			.0196				
.834	-.1145						
.850				.0044	.0461	.0675	
.857			.0013				
.865	.0176						
.900	-.0044			.0001			.0521
.905			-.0109		.0055		

ARC11-716 IA14 O1+T12+S12N25+AT11 UPPER WING (RB1U17)

MACH (1) = .898 ALPHAO(1) = -8.170

SECTION (1)UPPER WING DEPENDENT VARIABLE CP

Y/BW	.2990	.3640	.4270	.5340	.6730	.7800	.8870
X/CW							
.950				-.0384		.0312	
.953			-.0469				
.965	-.0792						

MACH (1) = .838 ALPHAO(2) = -4.140

SECTION (1)UPPER WING DEPENDENT VARIABLE CP

Y/BW	.2990	.3640	.4270	.5340	.6730	.7800	.8870
X/CW							
.000	.0152	.0969	.3134	.3472	.2320	.1543	.1921
.020				.3561	.0000	.3111	.2749
.025			.2886				
.040		.1781					
.045			.2147				
.050	.0224			.1468	.1310	.1088	.0437
.080				-.0139			
.085			.0866				
.086		.2149					
.094	.0348						
.150				-.2125	-.2260	-.2289	-.2934
.163		.0000					
.177			-.1231				
.193		.0772					
.229	.1114						
.250				-.3563	-.4079	-.4646	-.5545
.274			-.2208				
.339		-.1925					
.362	.0686						
.400				-.3111	-.4301		-.6792
.402			-.2901				
.497	.0000						
.550				-.3146	-.4585		
.565			.0000				
.600							-.6027
.650						-.5373	
.700	-.1123				-.1978		
.725				-.1976			
.750						.1231	.0037
.760			-.2016				
.775				.0394	.0702		
.800			.0053				
.834	-.1970						
.850				.0224	.0677	.1011	

ARC11-716 IA14 O1+T12+S12N25+AT11 UPPER WING (RB1U17)

MACH (1) = .896 ALPHAO(2) = -4.140

SECTION (1)UPPER WING DEPENDENT VARIABLE CP

X/CW \ Y/BW	.2990	.3640	.4270	.5340	.6730	.7800	.8870
.857			-.0040				
.865	-.0191						
.900	-.0226			.0177			.0877
.905			-.0085		.0187		
.950				-.0192		.0481	
.953			-.0406				
.965	-.0692						

MACH (1) = .896 ALPHAO(3) = -.220

SECTION (1)UPPER WING DEPENDENT VARIABLE CP

X/CW \ Y/BW	.2990	.3640	.4270	.5340	.6730	.7800	.8870
.000	-.0434	.0688	.3574	.4813	.4224	.3766	.3879
.020				.1705	.0000	.0809	.0241
.025			.1635				
.040		.1431					
.045			.0648				
.050	-.0302			-.0706	-.1226	-.1623	-.2532
.080				-.2553			
.085			-.0850				
.086		.1508					
.094	-.0096						
.150				-.4317	-.4939	-.4915	-.5338
.163		.0000					
.177			-.3013				
.193		-.0464					
.229	.0699						
.250				-.6093	-.6486	-.7149	-.7590
.274			-.3732				
.339		-.3835					
.362	-.0168						
.400				-.5445	-.6603		-.9665
.402			-.4809				
.497	.0000						
.550				-.4148	-.5145		
.565			.0000				
.600							-.7101
.650						-.6000	
.700	-.1652				-.1993		
.725				-.3346			
.750						.1715	.0960
.760			-.2371				

ARC11-716 IA14 O1+T12+S12N25+AT11 UPPER WING (RB1U17)

MACH (1) = .898 ALPHAO(3) = -.220

SECTION (1)UPPER WING DEPENDENT VARIABLE CP

X/CW \ Y/BW	.2990	.3640	.4270	.5340	.6730	.7800	.8870
.775				.0010	.0960		
.808			-.0040				
.834	-.2031						
.850				.0110	.0875	.1359	
.857			.0056				
.865	-.0551						
.900	-.0275			.0009			.1210
.905			.0059		.0316		
.950				-.0262		.0653	
.953			-.0177				
.965	-.0569						

MACH (1) = .898 ALPHAO(4) = 3.830

SECTION (1)UPPER WING DEPENDENT VARIABLE CP

X/CW \ Y/BW	.2990	.3640	.4270	.5340	.6730	.7800	.8870
.000	-.1312	-.0331	.3319	.5251	.4830	.4165	.3779
.020				-.0356	.0000	-.2455	-.3658
.025			.0179				
.040		.0050					
.045			-.0927				
.050	-.0895			-.2842	-.3925	-.4930	-.6360
.080				-.4825			
.085			-.2490				
.086		.0781					
.094	-.0494						
.150				-.6819	-.7960	-.7956	-.8339
.163		.0000					
.177			-.4543				
.193		-.1488					
.229	.0395						
.250				-.7537	-.8920	-.9903	-.8974
.274			-.5527				
.339		-.4875					
.362	-.0016						
.400				-.8016	-.9878		-.7244
.402			-.6860				
.497	.0000						
.550				-.3938	-.4197		
.565			.0000				
.600							-.5812
.650						-.5082	

ARC11-716 IA14 O1+T12+S12N25+AT11 UPPER WING (RB1U17)

MACH (1) = .898 ALPHAO(4) = 3.830

SECTION (1)UPPER WING DEPENDENT VARIABLE CP

X/CW \ Y/BW	.2990	.3640	.4270	.5340	.6730	.7800	.8870
.700	-.2255				-.1994		
.725				-.1801			
.750						-.3574	-.4768
.760			-.1390				
.775				-.0034	-.0615		
.808			-.0040				
.834	-.1755						
.850				.0088	-.0160	-.1992	
.857			.0039				
.865	-.0268						
.900	-.0036			.0108			-.3654
.905			.0024		.0090		
.950				-.0014		-.0850	
.953			-.0103				
.965	-.0265						

MACH (1) = .898 ALPHAO(5) = 8.030

SECTION (1)UPPER WING DEPENDENT VARIABLE CP

X/CW \ Y/BW	.2990	.3640	.4270	.5340	.6730	.7800	.8870
.000	-.2235	-.1585	.2811	.5230	.4245	.3149	.2355
.020				-.2304	.0000	-.5618	-.7307
.025			-.1316				
.040		.0015					
.045			-.2446				
.050	-.1614			-.4740	-.6234	-.7725	-.9621
.080				-.6570			
.083			-.4234				
.086		.0018					
.094	-.1042						
.150				-.8708	-1.0020	-1.0010	-.9879
.163		.0000					
.177			-.5829				
.193		-.2379					
.229	.0097						
.250				-.9751	-1.1210	-.9150	-.9198
.274			-.6862				
.339		-.5882					
.362	-.1301						
.400				-1.0350	-.8631		-.6614
.402			-.8375				
.497	.0000						

ARC11-716 IA14 O1+T12+S12N25+AT11 UPPER WING (RB1U17)

MACH (1) = .898 ALPHAO(5) = 8.030

SECTION (1)UPPER WING DEPENDENT VARIABLE CP

Y/BW	.2990	.3640	.4270	.5340	.6730	.7800	.8870
X/CW							
.550				-.3549	-.6786		
.565			.0000				
.600							-.5865
.650						-.5836	
.700	-.2349				-.2223		
.725				-.3205			
.750						-.4915	-.5506
.760			-.2247				
.775				-.2131	-.4225		
.808			-.0872				
.834	-.1789						
.850				-.1464	-.2950	-.4258	
.857			-.0589				
.865	-.0502						
.900	-.0308			-.0956			-.5128
.905			-.0415		-.1605		
.950				-.0722		-.3558	
.953			-.0318				
.965	-.0470						

MACH (2) = .977 ALPHAO(1) = -7.920

SECTION (1)UPPER WING DEPENDENT VARIABLE CP

Y/BW	.2990	.3640	.4270	.5340	.6730	.7800	.8870
X/CW							
.000	-.1291	.1388	.3025	.2972	.1246	.0020	.0265
.020				.5418	.4679	.4706	.4256
.025			.4419				
.040		.2525					
.045			.4024				
.050	.0265			.3846	.3597	.3416	.2924
.080				.2532			
.085			.3113				
.086		.3276					
.094	.0774						
.150				.0647	.0613	.0714	.0035
.163		.0000					
.177			.1316				
.193		.2662					
.229	.2201						
.250				-.1852	-.1119	-.1423	-.2475
.274			.0177				
.339		.0364					

ARC11-716 IA14 OL+T12+S12N25+AT11 UPPER WING (RB1U17)

MACH (2) = .977 ALPHAO(1) = -7.920

SECTION (1)UPPER WING DEPENDENT VARIABLE CP

Y/BW	.2990	.3640	.4270	.5340	.6730	.7800	.8870
X/CW							
.362	.2338						
.400				-.2032	-.1873		-.3811
.402			-.0756				
.497	.0000						
.550				-.2384	-.2464		
.565			.0000				
.600							-.4202
.650						-.3676	
.700	.0389				-.2414		
.725				-.3464			
.750						-.1418	-.0786
.760			-.2472				
.775				-.1232	-.0621		
.800			.0322				
.834	-.1886						
.850				-.0174	.0754	.0804	
.857			.0483				
.865	.0203						
.900	.0375			-.0083			.0821
.905			.0478		.0593		
.950				-.0472		.0687	
.953			.0143				
.965	-.0135						

MACH (2) = .976 ALPHAO(2) = -3.880

SECTION (1)UPPER WING DEPENDENT VARIABLE CP

Y/BW	.2990	.3640	.4270	.5340	.6730	.7800	.8870
X/CW							
.000	-.2663	.1731	.4002	.4428	.3237	.2499	.2843
.020				.4173	.3634	.3676	.3392
.025			.3588				
.040		.2473					
.045			.2854				
.050	.0330			.2094	.1880	.1642	.1219
.080				.0968			
.085			.1623				
.086		.2829					
.094	.0744						
.150				-.1338	-.1498	-.1481	-.1919
.163		.0000					
.177			-.0390				
.193		.1566					

ARC11-716 IA14 O1+T12+S12N25+AT11 UPPER WING (RB1U17)

MACH (2) = .976 ALPHAO(2) = -3.880

SECTION (1)UPPER WING DEPENDENT VARIABLE CP

X/CW \ Y/BW	.2990	.3640	.4270	.5340	.6730	.7800	.8870
.229	.1898						
.250				-.4095	-.3327	-.3669	-.4412
.274			-.1371				
.339		-.1050					
.362	.1531						
.400				-.3317	-.2889		-.5520
.402			-.2154				
.497	.0000						
.550				-.3103	-.3233		
.565			.0000				
.600							-.4893
.650						-.4393	
.700	-.0090				-.2737		
.725				-.4104			
.750						-.3108	-.2703
.760			-.2040				
.775				-.3744	-.2872		
.800			-.2121				
.834	-.2402						
.850				-.2478	-.0937	-.0435	
.857			-.1336				
.865	-.1669						
.900	-.1206			-.1030			-.0004
.905			-.0283		.0045		
.950				-.1113		.0080	
.953			-.0319				
.965	-.0722						

MACH (2) = .977 ALPHAO(3) = .090

SECTION (1)UPPER WING DEPENDENT VARIABLE CP

X/CW \ Y/BW	.2990	.3640	.4270	.5340	.6730	.7800	.8870
.000	-.3086	.1201	.4249	.5565	.4959	.4535	.4696
.020				.2554	.1983	.1669	.1175
.025			.2417				
.040		.2053					
.045			.1496				
.050	-.0103			.0225	-.0291	-.0963	-.1593
.060				-.1489			
.065			.0074				
.086		.2182					
.094	.0369						

ARC11-716 IA14 O1+T12+S12N25+AT11 UPPER WING (RB1U17)

MACH (2) = .977 ALPHAO(3) = .090

SECTION (1)UPPER WING DEPENDENT VARIABLE CP

Y/BW	.2990	.3640	.4270	.5340	.6730	.7800	.8870
X/CW							
.150				-.3440	-.3932	-.3948	-.4182
.163		.0000					
.177			-.1865				
.193		.0485					
.229	.1502						
.250				-.5041	-.5186	-.5729	-.6267
.274			-.2949				
.339		-.2589					
.362	.0817						
.400				-.5035	-.6249		-.8126
.402			-.3886				
.497	.0000						
.550				-.2661	-.3479		
.565			.0000				
.600							-.7559
.650						-.4316	
.700	-.0488				-.2721		
.725				-.3484			
.750						-.3024	-.3187
.760			-.3039				
.775				-.3233	-.3017		
.808			-.2509				
.834	-.2540						
.850				-.2956	-.1623	-.0559	
.857			-.2508				
.865	-.2078						
.900	-.2109			-.1868			-.0382
.905			-.1699		-.0439		
.950				-.1176		-.0157	
.953			-.1070				
.965	-.1611						

MACH (2) = .975 ALPHAO(4) = 4.020

SECTION (1)UPPER WING DEPENDENT VARIABLE CP

Y/BW	.2990	.3640	.4270	.5340	.6730	.7800	.8870
X/CW							
.000	-.3493	-.0168	.3782	.5877	.5444	.4743	.4421
.020				.0472	-.0105	-.1300	-.2431
.025			.0799				
.040		.1178					
.045			-.0179				
.050	-.0810			-.1816	-.2826	-.3823	-.4906

ARC11-716 IA14 O1+T12+S12N2J+AT11 UPPER WING (RB1U17)

MACH (2) = .973 ALPHAO(4) = 4.020

SECTION (1)UPPER WING DEPENDENT VARIABLE CP

Y/BW	.2990	.3640	.4270	.5340	.6730	.7800	.8970
X/CW							
.080				-.3675			
.085			-.1747				
.086		.1307					
.094	-.0248						
.150				-.5473	-.6623	-.6540	-.6946
.163		.0000					
.177			-.3414				
.193		-.0629					
.229	.1025						
.250				-.7669	-.7715	-.8445	-.8454
.274			-.4380				
.339		-.3679					
.362	.0107						
.400				-.8601	-.8644		-.9896
.402			-.5900				
.497	.0000						
.550				-.3646	-.7986		
.565			.0000				
.600							-.8538
.650						-.8317	
.700	-.1420				-.2757		
.725				-.4418			
.750						-.4089	-.6180
.760			-.3176				
.775				-.4132	-.2600		
.800			-.2840				
.834	-.1592						
.850				-.3495	-.1480	-.0873	
.857			-.2979				
.865	-.2429						
.900	-.2523			-.2889			-.5242
.905			-.2369		-.0981		
.950				-.2225		-.0313	
.953			-.1601				
.965	-.2247						

ARC11-716 IA14 O1+T12+S1PN25+AT11 UPPER WING (RB1U17)

MACH (2) = .977 ALPHAO(5) = 8.030

SECTION (1) UPPER WING DEPENDENT VARIABLE CP

X/CW \ Y/BW	.2995	.3610	.4270	.5340	.6730	.7800	.8870
.000	-.3768	-.1500	.3416	.6018	.5305	.4176	.3286
.020				-.1039	-.2030	-.3987	-.5600
.025			-.0314				
.040		.0533					
.045			-.1462				
.050	-.3682			-.3446	-.4736	-.6125	-.7767
.080				-.5159			
.085			-.3085				
.086		.0705					
.094	-.0659						
.150				-.7107	-.8226	-.8629	-.9120
.163		.0000					
.177			-.4383				
.195		-.1326					
.229	.0724						
.250				-.8873	-.9533	-.9762	-.9514
.274			-.5289				
.339		-.4278					
.362	-.0384						
.400				-.9461	-.9607		-.9460
.402			-.6783				
.497	.0000						
.550				-.6223	-.8537		
.565			.0000				
.600							-.7767
.650						-.7296	
.700	-.3087				-.2940		
.725				-.4086			
.750						-.6139	-.7319
.760			-.3163				
.775				-.3397	-.5124		
.808			-.2558				
.834	-.2596						
.850				-.3301	-.3521	-.5287	
.857			-.2669				
.865	-.2330						
.900	-.2311			-.3094			-.7230
.905			-.2293		-.1905		
.950				-.2860		-.5290	
.953			-.1798				
.965	-.2000						

ARC1'-716 IA14 O1+T12+S12N25+AT11 UPPER WING (RB1U17)

MACH (3) = 1.102 ALPHAO(1) = -7.940

SECTION (1)UPPER WING DEPENDENT VARIABLE CP

Y/BW	.2990	.3640	.4270	.5340	.6730	.7800	.8870
X/CW							
.000	-.2140	-.0857	.3002	.3723	.2388	.1327	.1520
.020				.5419	.4969	.5202	.5023
.025			.4002				
.040		0403					
.045			.3597				
.050	-.1182			.3789	.3911	.3929	.3797
.080				.2496			
.085			.2759				
.086		.2080					
.094	-.0944						
.150				.0864	.1112	.1511	.1194
.163		.0000					
.177			.1193				
.193		.2075					
.229	-.0298						
.250				-.1080	-.0423	-.0331	-.1017
.274			.0509				
.339		.0304					
.362	.1547						
.400				-.0249	-.0344		-.2318
.402			-.0101				
.497	.0000						
.550				-.0260	-.0857		
.565			.0000				
.600							-.2911
.650						-.2087	
.700	.1601				-.1913		
.725				-.1282			
.750						-.1545	-.1774
.760			-.1003				
.775				-.1013	-.1010		
.800			-.0270				
.834	-.0527						
.850				-.0805	-.0709	-.0556	
.857			.0112				
.865	.0229						
.900	.0497			.0258			.0458
.905			.0741		.0917		
.950				.0660		.077[illegible]	
.953			.0793				
.969	.0473						

DATE 10 JAN 75 TABULATED PRESSURE DATA - IA14A - VOL. 6 (RB1U17)

ARC11-716 IA14 O1+T12+S12N25+A711 UPPER WING

MACH (3) = 1.101 ALPHAO(2) = -3.890

SECTION (1)UPPER WING DEPENDENT VARIABLE CP

X/CW \ Y/BW	2990	.3640	.4270	.5340	.6730	.7800	.8870
.000	-.1879	-.0176	.3969	.4863	.3809	.3035	.3440
.020				.4291	.3743	.3802	.4046
.025			.3373				
.040		.0987					
.045			.2689				
.050	-.1905			.2278	.2022	.1803	.2075
.080				.0722			
.085			.1569				
.086		.2010					
.094	-.1213						
.150				-.1255	-.1370	-.1010	-.0760
.163		.0000					
.177			-.0158				
.193		.1268					
.229	-.0298						
.250				-.2608	-.2854	-.2708	-.3040
.274			-.1313				
.339		-.1116					
.362	.1135						
.400				-.2796	-.3015		-.4916
.402			-.2554				
.497	.0000						
.550				-.0117	-.1034		
.565			.0000				
.600							-.2276
.650						-.2309	
.700	.1169				-.1890		
.725				-.1031			
.750						-.1570	-.0712
.760			-.1182				
.775				-.0843	-.1248		
.808			-.0537				
.834	-.0810						
.850				-.0806	-.0817	.0309	
.857			-.0519				
.865	-.0016						
.900	-.0057			-.0423			.1205
.905			-.0057		.0657		
.950				.0441		.1081	
.953			.0158				
.965	-.0210						

ARC11-716 IA14 G1<T12+S12N25+AT11 UPPER WING (RB1U17)

MACH (3) = 1.103 ALPHAO(3) = .090

SECTION (1)UPPER WING DEPENDENT VARIABLE CP

X/CW \ Y/BW	.2990	.3640	.4270	.5340	.6730	.7800	.8870
.000	-.1972	-.0639	.4200	.5737	.5153	.5058	.5491
.020				.2757	.2527	.2450	.2214
.025			.2280				
.040		.0744					
.045			.1387				
.050	-.2518			.0608	.0367	.0032	-.0287
.080				-.1045			
.085			-.0022				
.086		.1613					
.094	-.1928						
.150				-.2922	-.3021	-.2740	-.2776
.163		.0000					
.177			-.1480				
.193		.0407					
.229	-.0489						
.250				-.4702	-.4303	-.4519	-.4740
.274			-.2436				
.339		-.2042					
.362	.0682						
.400				-.5670	-.5456		-.6502
.402			-.3984				
.497	.0000						
.550				-.1527	-.3449		
.56			.0000				
.600							-.6321
.650						-.5310	
.700	.0363				-.1927		
.725				-.1783			
.750						-.0190	-.2633
.760			-.1475				
.775				-.1489	-.1065		
.800			-.0713				
.834	-.0987						
.850				-.1449	-.0250	.0757	
.857			-.0835				
.865	-.0282						
.900	-.0384			-.1015			-.0884
.905			-.0560		.0503		
.950				-.0213		.1258	
.953			-.0232				
.965	-.0603						

ARC1.-716 IA14 O1+T12+S12N25+A111 UPPER WING (RB1U17)

MACH (3) = 1.100 ALPHAO(4) = 4.060

SECTION (1)UPPER WING DEPENDENT VARIABLE CP

Y/BW	.2990	.3640	.4270	.5340	.6730	.7800	.8870
X/CW							
.000	-.2123	-.2456	.3721	.6045	.5885	.5452	.5375
.020				.0857	.0804	-.0002	-.0872
.025			.0848				
.040		-.0263					
.045			-.0260				
.050	-.2740			-.1338	-.1664	-.2240	-.3095
.060				-.2901			
.065			-.1478				
.086		.0817					
.094	-.2745						
.150				-.4534	-.5065	-.4836	-.5022
.163		.0000					
.177			-.2725				
.193		-.0601					
.229	-.0815						
.250				-.6340	-.6263	-.6430	-.6373
.274			-.3693				
.339		-.2924					
.362	.0291						
.400				-.6986	-.7165		-.7829
.402			-.4990				
.497	.0000						
.550				-.3813	-.7036		
.565			.0000				
.600							-.7413
.650						-.7553	
.700	-.1544				-.2184		
.725				-.2860			
.750						-.5678	-.5739
.760			-.1903				
.775				-.2095	-.1417		
.808			-.0862				
.634	-.0984						
.850				-.1615	-.0729	-.3775	
.857			-.1112				
.865	-.0661						
.900	-.0718			-.1327			-.3921
.905			-.1035		-.0056		
.950				-.1005		-.0546	
.953			-.0860				
.965	-.1291						

'RC11-716 IA14 01*712^S12N25^AT11 UPPER WING (RB1U17)

MACH (3) = 1.099 ALPHAO(5) = 8.020

SECTION (1)UPPER WING DEPENDENT VARIABLE CP

Y/BW	.2990	.3640	.4270	.5340	.6730	.7860	.8870
X/CW							
.000	-.7260	-.5191	.2873	.6033	.5983	.5112	.4487
.020				-.0849	-.0948	-.2331	-.3663
.025			-.0555				
.040		-.1709					
.045			-.1591				
.050	-.2843			-.2770	-.3432	-.4367	-.5644
.080				-.4303			
.085			-.2902				
.086		-.0231					
.094	-.2802						
.150				-.6278	-.6561	-.6678	-.7015
.163		.0000					
.177			-.3856				
.193		-.1306					
.229	-.1377						
.250				-.8035	-.7784	-.7898	-.7948
.274			-.4609				
.339		-.3536					
.362	.0017						
.400				-.8334	-.8468		-.8340
.402			-.5636				
.497	.0000						
.550				-.7838	-.8233		
.565			.0000				
.600							-.7731
.650						-.7320	
.700	-.4090				-.2695		
.725				-.3689			
.750						-.6214	-.7106
.760			-.2317				
.775				-.3060	-.3039		
.800			-.1116				
.834	-.0904						
.850				-.2507	-.2309	-.5559	
.857			-.1417				
.865	-.0671						
.900	-.1164			-.2056			-.6770
.905			-.1392		-.0901		
.950				-.1712		-.5523	
.953			-.1392				
.965	-.1783						

ARC11-716 IA14 O1+T12+S12N25+AT11 UPPER WING (RB1U17)

MACH (4) = 1.248 ALPHAO(1) = -7.940

SECTION (1)UPPER WING DEPENDENT VARIABLE CP

Y/BW	.2990	.3640	.4270	.5340	.6730	.7800	.8870
X/CN							
.000	-.1566	-.1952	.1818	.3690	.2759	.2187	.2521
.020				.5267	.4768	.5050	.3009
.025			.3128				
.030		-.0662					
.045			.2840				
.050	-.1204			.3695	.3773	.3738	.3648
.080				.2324			
.085			.1886				
.086		.0469					
.094	-.0704						
.150				.0457	.0813	.1163	.1164
.163		.0000					
.177			.0914				
.193		.1273					
.229	-.0390						
.250				-.2107	-.0848	-.0791	-.1064
.274			-.0179				
.339		-.0269					
.362	.0798						
.400				-.3559	-.2370		-.2996
.402			-.1788				
.497	.0000						
.550				-.0364	-.1821		
.565			.0000				
.600							-.3781
.650						-.0836	
.700	.1245				-.1184		
.725				-.0367			
.750						.0365	-.1080
.760			.0118				
.775				-.0077	.0597		
.808			.0697				
.834	.0437						
.850				-.0336	.0563	.0778	
.857			.0607				
.865	.0974						
.900	.1000			-.0437			.1635
.905			.0894		.0856		
.950				.0023		.1502	
.953			.1124				
.965	.0958						

ARC11-716 IA14 O1+T12+S12N25+AT11 UPPER WING (RB1U17)

MACH (4) = 1.246 ALPHAO(2) = -3.840

SECTION (1)UPPER WING DEPENDENT VARIABLE CP

Y/BW	.2990	.3640	.4270	.5340	.6730	.7690	.8870
X/CW							
.000	-.1522	-.1197	.3128	.5102	.4338	.3651	.4036
.020				.4409	.4084	.4157	.4254
.025			.2907				
.040		-.0565					
.045			.2262				
.050	-.1821			.2542	.2447	.2326	.2315
.080				.1160			
.085			.1212				
.086		.0207					
.094	-.1471						
.150				-.0771	-.0805	-.0426	-.0196
.163		.0000					
.177			.0018				
.193		.0799					
.229	-.0820						
.250				-.2183	-.2129	-.2136	-.2303
.274			-.1058				
.339		-.0884					
.362	.0345						
.400				-.3390	-.3587		-.4128
.402			-.2671				
.497	.0000						
.550				-.3306	-.3963		
.565			.0000				
.600							-.4454
.630						-.4522	
.700	-.0006				-.1438		
.725				-.0229			
.750						-.2696	-.3952
.760			-.0309				
.775				.0350	-.0093		
.808			.0354				
.831	-.0006						
.850				.0188	.0250	-.1064	
.857			.0162				
.865	.0604						
.900	.0439			-.0048			-.1288
.905			.0220		.0582		
.950				.0025		.1211	
.953			.0230				
.965	.0062						

ARC11-716 IA14 O1+T12+S12N25+AT11 UPPER WING (RB1U17)

MACH (4) = 1.244 ALPHAO(3) = .050

SECTION (1)UPPER WING DEPENDENT VARIABLE CP

X/CW \ Y/BW	.2990	.3640	.4270	.5340	.6730	.7800	.8870
.000	-.1282	-.1179	.3679	.6015	.5435	.4879	.5171
.020				.3193	.3055	.2878	.2895
.025			.2113				
.040		-.0423					
.045			.1257				
.050	-.1942			.1066	.0960	.0745	.0732
.080				-.0488			
.085			.0159				
.086		.0199					
.094	-.1873						
.150				-.2317	-.2478	-.1986	-.1691
.163		.0000					
.177			-.1287				
.193		.0080					
.229	-.0961						
.250				-.4002	-.3617	-.3600	-.3566
.274			-.2088				
.339		-.1697					
.362	.0067						
.400				-.4933	-.4746		-.5229
.402			-.3533				
.497	.0000						
.550				-.5100	-.4875		
.565			.0000				
.600							-.5229
.650						-.5313	
.700	-.1876				-.1735		
.725				-.2114			
.750						-.4859	-.4595
.760			-.1026				
.775				-.0860	-.167.		
.808			.0094				
.834	-.0382						
.850				-.0571	-.1169	-.2462	
.857			-.0188				
.865	.0203						
.900	.0022			-.0777			-.2600
.905			-.0242		.0000		
.950				-.0826		-.1910	
.953			-.0340				
.965	-.0594						

ARC11-716 IA14 O1+T12+S12N25+AT11 UPPER WING (RB1U17)

MACH (4) = 1.249 ALPHAO(4) = 4.010

SECTION (1)UPPER WING DEPENDENT VARIABLE CP

Y/BW	.2990	.3640	.4270	.5340	.6730	.7800	.8870
X/CW							
.000	-.1269	-.2138	.3567	.6458	.6094	.5669	.6082
.020				.1419	.1678	.1125	.0783
.025			.0946				
.040		-.0986					
.045			-.0041				
.050	-.1815			-.0554	-.0654	-.0938	-.1361
.080				-.2003			
.085			-.1390				
.086		-.0398					
.094	-.1829						
.150				-.3892	-.3847	-.3446	-.3308
.163		.0000					
.177			-.2476				
.193		-.0760					
.229	-.1182						
.250				-.5936	-.5104	-.4855	-.4696
.274			-.3239				
.339		-.2443					
.362	-.0304						
.400				-.6135	-.5960		-.5975
.402			-.4151				
.497	.0000						
.550				-.6303	-.5970		
.565			.0000				
.600							-.5890
.650						-.6097	
.700	-.3349				-.2050		
.725				-.2913			
.750						-.5513	-.5875
.760			-.1456				
.775				-.2522	-.3544		
.800			-.0489				
.834	-.0278						
.850				-.2065	-.2042	-.4223	
.857			-.0427				
.865	-.0009						
.900	-.0120			-.1720			.4477
.905			-.0440		-.1294		
.950				-.1406		-.3683	
.953			-.0503				
.965	-.0917						

ARC11-716 IA14 D1+T12+S12N25+AT11 UPPER WING (RB1U17)

MACH (4) = 1.249 ALPHAO(5) = 7.930

SECTION (1)UPPER WING DEPENDENT VARIABLE CP

X/CW \ Y/BW	.2990	.3640	.4270	.5340	.6730	.7800	.8870
.000	-.1547	-.3104	.2667	.6329	.6330	.5741	.5450
.020				-.0385	.0157	-.0764	-.1673
.025			-.0674				
.040		-.2277					
.045			-.1625				
.050	-.1880			-.2105	-.2225	-.2687	-.3582
.080				-.3447			
.085			-.2807				
.086		-.1422					
.094	-.1945						
.150				-.5257	-.5072	-.4906	-.4988
.163		.0000					
.177			-.3743				
.193		-.1662					
.229	-.1774						
.250				-.6583	-.6149	-.6029	-.5928
.274			-.4331				
.339		-.3123					
.352	-.0633						
.400				-.6828	-.6973		-.6869
.402			-.4594				
.497	.0000						
.550				-.6095	-.6761		
.565			.0000				
.600							-.6613
.650						-.6730	
.700	-.4023				-.2320		
.725				-.2940			
.750						-.6137	-.6308
.760			-.2372				
.775				-.2478	-.5864		
.808			-.1367				
.834	-.0341						
.850				-.2500	-.5499	-.5460	
.857			-.1041				
.865	-.0099						
.900	-.0317			-.2330			-.5101
.905			-.0819		-.3467		
.950				-.2073		-.4656	
.953			-.0898				
.965	-.1097						

ARC11-716 IA14 O1+T12+S12N25+AT11 UPPER WING (RB1U18) (02 OCT 73)

REFERENCE DATA

SREF = 2.4210 SQ.FT. XMRP = 29.5000 INCHES
LREF = 38.7090 INCHES YMRP = .0000 INCHES
BREF = 38.7090 INCHES ZMRP = .0000 INCHES
SCALE = .0300 SCALE

PARAMETRIC DATA

ALPHAO = .000 ELEVON = .000
RUDDER = .000 SPDBRK = .000

MACH (1) = .050 BETAO (1) = -0.060

SECTION (1)UPPER WING DEPENDENT VARIABLE CP

Y/BW	.2990	.3640	.4270	.5340	.6730	.7800	.8870
X/CW							
.000	.0548	.1710	.4782	.6389	.6063	.5641	.5604
.020				.1573	.0000	.0561	.0125
.025			.1874				
.040		.2137					
.045			.0588				
.050	.0178			-.1195	-.1824	-.2316	-.3178
.080				-.3401			
.085			-.1407				
.086		.1924					
.094	.0315						
.150				-.5816	-.6391	-.6234	-.5953
.163		.0000					
.177			-.3912				
.193		-.0763					
.229	.1046						
.250				-.7569	-.7970	-.8476	-.8304
.274			-.5058				
.339		-.4442					
.362	-.0241						
.400				-.8021	-.9060		-.9582
.472			-.6284				
.497	.0000						
.550				-.2082	-.1935		
.565			.0000				
.600							-.4533
.650						-.2798	
.700	-.0208				-.1836		
.725				-.0639			
.750						.0342	-.1284
.760			-.0132				
.775				.0838	.1105		
.808			.1256				
.834	.0305						
.850				.0632	.1171	.1297	
.857			.1066				
.865	.1535						
.900	.1207			.0461			.0398
.905			.0784		.0684		

ARC11-716 IA14 D1+T12+S12N25+AT11 UPPER WING (RB1U18)

MACH (1) = .898 BETAO (1) = -8.060

SECTION (1) UPPER WING DEPENDENT VARIABLE CP

Y/BW	.2990	.3640	.4270	.5340	.6730	.7800	.8870
X/CW							
.950				-.0017		.1006	
.953			.0250				
.965	.0228						

MACH (1) = .898 BETAO (2) = -4.010

SECTION (1) UPPER WING DEPENDENT VARIABLE CP

Y/BW	.2990	.3640	.4270	.5340	.6730	.7800	.8870
X/CW							
.000	.0173	.1337	.4275	.5682	.5213	.4772	.4821
.020				.1791	.0000	.0710	.0179
.025			.1899				
.040		.1877					
.045			.0792				
.050	-.0006			-.0824	-.1544	-.1969	-.2993
.080				-.2876			
.085			-.1038				
.086		.1840					
.094	.0144						
.150				-.5130	-.5708	-.5700	-.5730
.163		.0000					
.177			-.3415				
.193		-.0527					
.229	.0930						
.250				-.6151	-.6942	-.7830	-.8022
.274			-.4541				
.339		-.4116					
.362	-.0147						
.400				-.6091	-.8594		-1.0060
.402			-.5588				
.497	.0000						
.550				-.3020	-.4549		
.565			.0000				
.600							-.4274
.650						-.2538	
.700	-.0997				-.1777		
.725				-.0826			
.750						.0994	-.0608
.760			-.0834				
.775				.0901	.0993		
.808			.0762				
.834	-.0649						
.850				.0665	.0952	.1416	

ARC11-716 IA14 OI+T12+S12M25+AT11 UPPER WING (RB1U13)

MACH (1) = .898 BETAO (2) = -4.010

SECTION (1)UPPER WING DEPENDENT VARIABLE CP

Y/BW	.2990	.3640	.4270	.5340	.6730	.7800	.8870
X/CW							
.857			.0563				
.865	.0716						
.890	.0574			.0551			.0767
.905			.0432		.0526		
.950				.0195		.0880	
.953			.0006				
.965	-.0147						

MACH (1) = .897 BETAO (3) = .030

SECTION (1)UPPER WING DEPENDENT VARIABLE CP

Y/BW	.2990	.3640	.4270	.5340	.6730	.7800	.8870
X/CW							
.000	-.0451	.0756	.3582	.4822	.4233	.3787	.3921
.020				.1679	.0000	.0798	.0281
.025			.1637				
.040		.1468					
.045			.0672				
.050	-.0253			-.0750	-.1275	-.1671	-.2647
.080				-.2609			
.085			-.0802				
.086		.1520					
.094	-.0074						
.150				-.4358	-.5014	-.4928	-.5413
.163		.0000					
.177			-.3025				
.193		-.0445					
.229	.0713						
.230				-.6250	-.6453	-.7177	-.7646
.274			-.3796				
.339		-.3674					
.362	-.0151						
.400				-.5707	-.6686		-.9746
.402			-.4924				
.497	.0700						
.550				-.4237	-.5165		
.565			.0000				
.600							-.7555
.650						-.6132	
.700	-.1625				-.2203		
.725				-.3362			
.750						.1477	.0686
.760			-.2552				

ARC11-716 IA14 O1+T12+S12N25+AT11 UPPER WING (RB1U18)

MACH (1) = .897 BETAO (3) = .030

SECTION (1)UPPER WING DEPENDENT VARIABLE CP

Y/BW	.2990	.3640	.4270	.5340	.6730	.7800	.8870
X/CW							
.775				-.0101	.0705		
.808			.0073				
.834	-.1961						
.850				.0037	.0808	.1166	
.857			.0100				
.865	-.0513						
.900	-.0213			-.0027			.1094
.905			.0058		.0272		
.950				-.0443		.0586	
.953			-.0154				
.965	-.0533						

MACH (1) = .898 BETAO (4) = 4.100

SECTION (1)UPPER WING DEPENDENT VARIABLE CP

Y/BW	.2990	.3640	.4270	.5340	.6730	.7800	.8870
X/CW							
.000	-.1224	.0116	.2436	.4166	.3356	.2864	.3059
.020				.1571	.0000	.0689	.0160
.025			.1160				
.040		.0777					
.045			.0474				
.050	-.0518			-.0570	-.1090	-.1447	-.2464
.060				-.2208			
.085			-.0717				
.086		.0965					
.094	-.0290						
.150				-.3736	-.4213	-.4564	-.5150
.163		.0000					
.177			-.2486				
.193		-.0324					
.229	.0507						
.230				-.4607	-.5735	-.6611	-.7337
.274			-.3285				
.339		-.2800					
.362	-.0160						
.400				-.4088	-.5420		-.6875
.402			-.3940				
.497	.0000						
.550				-.3721	-.5346		
.565			.0000				
.600							-.6755
.650						-.6452	

ARC11-716 IA14 O1+T12+S12N25+AT11 UPPER WING (RB1U18)

MACH (1) = .898 BETAO (4) = 4.100

SECTION (1)UPPER WING DEPENDENT VARIABLE CP

X/CW \ Y/BW	.2990	.3640	.4270	.5340	.6730	.7900	.8870
.700	-.2136				-.2712		
.725				-.4137			
.750						-.1606	-.1171
.760			-.3603				
.775				-.2413	-.1891		
.808			-.2178				
.834	-.3461						
.850				-.0648	-.0416	.0011	
.857			-.1076				
.865	-.2652						
.900	-.1605			-.0244			.0446
.905			-.0603		.0054		
.930				-.0158		.0169	
.953			-.0566				
.965	-.1111						

MACH (1) = .898 BETAO (5) = 8.130

SECTION (1)UPPER WING DEPENDENT VARIABLE CP

X/CW \ Y/BW	.2990	.3640	.4270	.5340	.6730	.7900	.8870
.000	-.2535	-.0228	.0000	.2432	.2799	.1963	.2107
.020				.1003	.0000	.0822	.0325
.025			.0325				
.040		.0136					
.045			-.0007				
.050	-.1360			-.0388	-.0599	-.1090	-.1962
.080				-.1539			
.085			-.0498				
.088		.0151					
.094	-.0099						
.150				-.2097	-.3462	-.3888	-.4612
.163		.0000					
.177			-.1620				
.195		-.0208					
.229	.0316						
.250				-.3725	-.49[illegible]	-.5621	-.6788
.274			-.2438				
.339		-.2069					
.382	-.0180						
.400				-.3708	-.5035		-.7623
.402			-.3114				
.497	.0000						

ARC11-716 IA14 O1+T12+S12N25+AT11 UPPER WING (RB1U18)

MACH (1) = .898 BETAO (5) = 8.130

SECTION (1)UPPER WING DEPENDENT VARIABLE CP

X/CW \ Y/BW	.2990	.3640	.4270	.5340	.6730	.7800	.8870
.550				-.3985	-.5342		
.565			.0000				
.600							-.6980
.650						-.6584	
.700	-.2481				-.2880		
.725				-.4112			
.750						-.2575	-.1596
.760			-.3632				
.775				-.3297	-.2675		
.808			-.2695				
.834	-.3127						
.850				-.1466	-.0913	-.0631	
.857			-.1542				
.865	-.2623						
.900	-.1874			-.0981			.0369
.905			-.0999		-.0035		
.950				-.0659		.0059	
.953			-.0874				
.965	-.1360						

MACH (2) = .978 BETAO (1) = -8.050

SECTION (1)UPPER WING DEPENDENT VARIABLE CP

X/CW \ Y/BW	.2990	.3640	.4270	.5340	.6730	.7800	.9870
.000	-.0799	.2109	.5367	.7019	.6666	.6277	.6229
.020				.2389	.2042	.1522	.1109
.025			.2497				
.040		.2592					
.045			.1283				
.050	-.0780			-.0248	-.0811	-.1454	-.1990
.080				-.2425			
.085			-.0612				
.086		.2497					
.094	.0236						
.150				-.4673	-.5240	-.4871	-.4671
.163		.0000					
.177			-.2861				
.193		.0094					
.229	.1632						
.250				-.7081	-.6734	-.7051	-.6843
.274			-.4030				
.339		-.3395					

ARC11-716 IA14 O1+T12+S12N25+AT11 UPPER WING (RB1U18)

MACH (2) = .978 BETAO (1) = -8.050

SECTION (1)UPPER WING DEPENDENT VARIABLE CP

X/CW \ Y/BW	.2990	.3640	.4270	.5340	.6730	.7800	.8870
.362	.0902						
.400				-.8364	-.8149		-.8462
.402			-.5712				
.497	.0000						
.550				-.2076	-.7251		
.565			.0000				
.600							-.6145
.650						-.5391	
.700	-.0162				-.2146		
.725				-.1242			
.750						-.3967	-.4288
.760			-.0274				
.775				.0729	.1016		
.808			.1474				
.834	-.0140						
.850				.0661	.1388	-.2037	
.857			.1338				
.865	.1626						
.900	.1536			.0524			-.3267
.905			.1140		.1113		
.950				-.0140		-.0184	
.953			.0550				
.965	.0648						

MACH (2) = .976 BETAO (2) = -4.010

SECTION (1)UPPER WING DEPENDENT VARIABLE CP

X/CW \ Y/BW	.2990	.3640	.4270	.5340	.6730	.7800	.8870
.000	-.1834	.1870	.4943	.6368	.5892	.5491	.5513
.020				.2631	.2148	.1694	.1172
.025			.2673				
.040		.2516					
.045			.1599				
.050	-.0300			.0106	-.0454	-.1116	-.1728
.060				-.1794			
.085			-.0117				
.086		.2511					
.094	.0512						
.150				-.3966	-.4502	-.4433	-.4397
.163		.0000					
.177			-.2281				
.193		.0395					

ARC11-716 IA14 O1+T12+S12N25+AT11 UPPER WING (RB1U18)

MACH (2) = .976 BETAO (2) = -4.010

SECTION (1)UPPER WING DEPENDENT VARIABLE CP

X/CW \ Y/BW	.2990	.3640	.4270	.5340	.6730	.7800	.8870
.229	.1663						
.250				-.6487	-.5853	-.6434	-.6565
.274			-.3433				
.339		-.2922					
.362	.0762						
.400				-.7649	-.7366		-.8582
.402			-.4976				
.497	.0000						
.550				-.2800	-.4023		
.565			.0000				
.600							-.8185
.650						-.6414	
.700	-.0162				-.2587		
.725				-.3802			
.750						-.1039	-.3857
.760			-.2725				
.775				-.2618	-.1247		
.808			-.1065				
.834	-.2159						
.850				-.0656	.0462	.0511	
.857			.0088				
.865	-.1083						
.900	-.0132			-.0330			-.1198
.905			.0339		.0465		
.950				-.0778		.0639	
.953			.0009				
.965	-.0071						

MACH (2) = .975 BETAO (3) = .040

SECTION (1)UPPER WING DEPENDENT VARIABLE CP

X/CW \ Y/BW	.2990	.3640	.4270	.5340	.6730	.7800	.8870
.000	-.2952	.1311	.4262	.5517	.4871	.4429	.4593
.020				.2683	.2138	.1831	.1340
.025			.2513				
.040		.2114					
.045			.1605				
.050	-.0067			.0357	-.0158	-.0728	-.1380
.060				-.1408			
.085			.0169				
.086		.2267					
.094	.0427						

ARC11-716 IA14 O4+T12+S12N25+AT11 UPPER WING (RB1U18)

MACH (2) = .975 BETAO (3) = .040

SECTION (1)UPPER WING DEPENDENT VARIABLE CP

Y/BW	.2990	.3640	.4270	.5340	.6790	.7890	.8870
X/CW							
.150				-.3280	-.3780	-.3755	-.4020
.163		.0000					
.177			-.1806				
.193		.0543					
.229	.1527						
.250				-.5119	-.5117	-.5635	-.6146
.274			-.2899				
.339		-.2558					
.362	.0829						
.400				-.5095	-.6076		-.8069
.402			-.3915				
.497	.0000						
.550				-.2807	-.3540		
.565			.0000				
.600							-.7486
.650						-.4437	
.700	-.0482				-.2713		
.725				-.3657			
.750						-.3104	-.2900
.760			-.2980				
.775				-.3386	-.3046		
.808			-.2527				
.834	-.2570						
.850				-.3095	-.1577	-.0543	
.857			-.2506				
.865	-.2077						
.900	-.2104			-.1832			-.0295
.905			-.1599		-.0426		
.950				-.1217		-.0165	
.953			-.0929				
.965	-.1449						

MACH (2) = .976 BETAO (4) = 4.070

SECTION (1)UPPER WING DEPENDENT VARIABLE CP

Y/BW	.2990	.3640	.4270	.5340	.6730	.7800	.8870
X/CW							
.000	-.2429	.0772	.2994	.4769	.3977	.3473	.3691
.020				.2499	.1926	.1687	.1265
.025			.1861				
.040		.1544					
.045			.1286				
.090	-.0631			.0433	-.0016	-.0578	-.1178

ARC11-716 IA14 O1+T12+S12N25+AT11 UPPER WING (RB1U18)

MACH (2) = .976 BETAO (4) = 4.070

SECTION (1)UPPER WING DEPENDENT VARIABLE CP

Y/BW	.2990	.3640	.4270	.5340	.6730	.7800	.8870
X/CW							
.080				-.1149			
.085			.0264				
.086		.1612					
.094	.0014						
.150				-.2569	-.3164	-.3262	-.3761
.163		.0000					
.177			-.1367				
.193		.0675					
.229	.1231						
.250				-.4049	-.4575	-.5209	-.5848
.274			-.2168				
.339		-.1800					
.362	.0818						
.400				-.3484	-.4250		-.7500
.402			-.2799				
.497	.0000						
.550				-.2770	-.3788		
.565			.0000				
.600							-.5341
.650						-.4930	
.700	-.0917				-.2799		
.725				-.3558			
.750						-.3849	-.3160
.780			-.3201				
.775				-.3435	-.3577		
.808			-.2976				
.834	-.2858						
.850				-.3381	-.2953	-.1674	
.857			-.3052				
.865	-.2613						
.900	-.2613			-.2938			-.0849
.905			-.2629		-.1405		
.950				-.1946		-.0834	
.953			-.2075				
.965	-.2442						

ARC11-716 IA14 O1+T12+S12N25+AT11 UPPER WING (RB1U18)

MACH (2) = .974 BETAO (5) = 8.120

SECTION (11UPPER WING DEPENDENT VARIABLE CP

Y/BW	.2990	.3640	.4270	.5340	.6730	.7800	.8870
X/CW							
.000	-.4533	-.0120	.1202	.3047	.3382	.2573	.2705
.020				.1892	.1956	.1670	.1297
.025			.0768				
.040		.0343					
.045			.0545				
.050	-.2220			.0564	.0263	-.0268	-.0828
.080				-.0545			
.085			.0169				
.086		.0227					
.094	-.1617						
.150				-.1810	-.2479	-.2733	-.3338
.163		.0000					
.177			-.0748				
.193		.0617					
.229	.0882						
.250				-.2347	-.3735	-.4442	-.5445
.274			-.1486				
.339		-.1158					
.362	.0542						
.400				-.2302	-.3810		-.6395
.402			-.2094				
.497	.0000						
.550				-.2456	-.4005		
.565			.0000				
.600							-.5848
.650						-.5273	
.700	-.1377				-.2804		
.725				-.3184			
.750						-.4475	-.3912
.760			-.3398				
.775				-.3078	-.4071		
.808			-.3186				
.834	-.3131						
.850				-.2699	-.3540	-.2739	
.857			-.2875				
.865	-.2902						
.900	-.2678			-.2109			-.1480
.905			-.2454		-.1521		
.990				-.1471		-.1395	
.993			-.1988				
.965	-.2198						

ARC11-716 IA14 O1+T12+S12N25+AT11 UPPER WING (RB1U18)

MACH (3) = 1.102 BETAO (1) = -8.090

SECTION (1)UPPER WING DEPENDENT VARIABLE CP

Y/BW	.2990	.3640	.4270	.5340	.6730	.7800	.8870
X/CW							
.000	.0182	.0006	.5611	.7416	.7198	.6944	.7046
.020				.3080	.3139	.2834	.2569
.025			.2859				
.040		.1071					
.045			.1608				
.050	-.1230			.0550	.0478	.0066	-.0284
.080				-.1430			
.085			-.0351				
.086		.2041					
.094	-.1134						
.150				-.3618	-.3661	-.3041	-.2873
.163		.0000					
.177			-.2221				
.193		.0134					
.229	-.0465						
.250				-.5339	-.5241	-.5155	-.4878
.274			-.3446				
.339		-.2831					
.362	.0629						
.400				-.5655	-.6396		-.6836
.402			-.4545				
.497	.0000						
.550				-.5511	-.6764		
.565			.0000				
.600							-.6614
.650						-.6679	
.700	-.0373				-.2280		
.725				-.1670			
.750						-.4400	-.5853
.760			-.1300				
.775				-.0251	-.0844		
.808			.0432				
.834	-.0227						
.850				.0492	.1292	-.3342	
.857			.0824				
.865	.0875						
.900	.0928			.1048			-.3226
.905			.1634		.1588		
.950				.1026		-.2633	
.953			.1532				
.965	.1478						

ARC11-716 IA14 O1+T12+S12N25+AT11 UPPER WING (RB1U10)

MACH (3) = 1.100 BETAO (2) = -4.010

SECTION (1)UPPER WING DEPENDENT VARIABLE CP

X/CW \ Y/BW	.2990	.3640	.4270	.5340	.6730	.7800	.8870
.000	-.0654	-.0628	.4928	.6641	.6152	.5870	.6202
.020				.3048	.2880	.2685	.2366
.025			.2622				
.040		.0353					
.045			.1567				
.090	-.1908			.0892	.0435	.0059	-.0275
.080				-.1164			
.085			-.0066				
.086		.1349					
.094	-.1570						
.150				-.3229	-.3536	-.3001	-.2877
.163		.0000					
.177			-.1755				
.193		.0210					
.229	-.0705						
.250				-.5227	-.4818	-.4900	-.4894
.274			-.2856				
.339		-.2273					
.362	.0552						
.400				-.6168	-.6072		-.6737
.402			-.4430				
.497	.0000						
.550				-.2605	-.6261		
.565			.0000				
.600							-.6747
.650						-.6238	
.700	.0034				-.2010		
.725				-.1948			
.750						-.4176	-.4672
.760			-.1399				
.775				-.0930	-.0337		
.808			-.0235				
.834	-.0682						
.850				-.0374	.0560	-.1646	
.857			-.0300				
.865	.0203						
.900	.0029			.0525			-.2116
.905			.0252		.1041		
.950				.0757		.1516	
.953			.0788				
.965	.0390						

DATE 10 JAN 75 TABULATED PRESSURE DATA - IA14A - VOL. 6 (RB1U18)

ARC11-716 IA14 O1+T12+S12N25+AT11 UPPER WING

MACH (3) = 1.102 BETAO (3) = .030

SECTION (1)UPPER WING DEPENDENT VARIABLE CP

X/CW \ Y/BW	.2990	.3640	.4270	.5340	.6730	.7800	.8870
.000	-.1883	-.0609	.4190	.5714	.5000	.4623	.5394
.020				.2897	.2579	.2619	.2435
.025			.2383				
.040		.0659					
.045			.1504				
.050	-.2497			.0777	.0443	.0241	-.0028
.060				-.0876			
.065			.0151				
.086		.1620					
.094	-.1865						
.150				-.2837	-.2971	-.2642	-.2619
.163		.0000					
.177			-.1398				
.193		.0426					
.229	-.0559						
.250				-.4005	-.4250	-.4413	-.4624
.274			-.2369				
.339		-.1928					
.362	.0675						
.400				-.5053	-.5445		-.6386
.402			-.3957				
.497	.0000						
.550				-.1168	-.3006		
.565			.0000				
.600							-.6277
.650						-.5030	
.700	.0270				-.1961		
.725				-.1314			
.750						-.0353	-.2654
.760			-.1482				
.775				-.1048	-.1018		
.800			-.0715				
.834	-.0994						
.850				-.1037	-.0187	.0736	
.857			-.0818				
.865	-.0260						
.900	-.0354			-.0609			-.0679
.905			-.0482		.0557		
.950				.0138		.1246	
.953			-.0148				
.965	-.0613						

ARC11-716 IA14 O1+T12+S12N25+AT11 UPPER WING (RB1U18)

MACH (3) = 1.100 BETAO (4) = 4.000

SECTION (1)UPPER WING DEPENDENT VARIABLE CP

X/CW \ Y/BW	.2990	.3640	.4270	.5340	.6730	.7800	.8870
.000	-.3313	-.1102	.2880	.9205	.4262	.3779	.4327
.020				.2850	.2349	.2228	.2182
.025			.1687				
.040		.0420					
.045			.1220				
.050	-.3012			.0914	.0902	.0157	-.0048
.060				-.0482			
.065			.0905				
.086		.0933					
.094	-.1725						
.150				-.2151	-.2535	-.2448	-.2460
.163		.0000					
.177			-.0798				
.193		.0674					
.229	-.0021						
.250				-.3809	-.3558	-.3904	-.4380
.274			-.1724				
.339		-.1227					
.362	.0656						
.400				-.4629	-.4773		-.5870
.402			-.2999				
.497	.0000						
.550				-.1442	-.1651		
.565			.0000				
.600							-.5594
.650						-.2453	
.700	.0080				-.2129		
.725				-.2066			
.750						-.1752	-.1034
.760			-.1978				
.775				-.1889	-.1692		
.808			-.1270				
.834	-.1467						
.850				-.2086	-.1401	-.0055	
.857			-.1449				
.865	-.1050						
.900	-. 756			-.2135			.0851
.935			-.1289		-.0234		
.950				-.1636		.0738	
.953			-.1135				
.965	-.1320						

ARC11-716 IA14 OI+T12+S12N25+AT11 UPPER WING (RB1U18)

MACH (3) = 1.100 BETA (5) = 8.130

SECTION (1)UPPER WING DEPENDENT VARIABLE CP

X/CW \ Y/BW	.2990	.3640	.4270	.5340	.6730	.7800	.8870
.000	-.5700	-.0408	.0983	.2802	.3730	.3243	.3524
.020				.1862	.2288	.2257	.2217
.025			.0701				
.040		-.0176					
.045			.0589				
.050	-.3448			.0698	.0737	.0514	.0306
.080				-.0189			
.085			.0261				
.086		-.0447					
.094	-.2122						
.150				-.1396	-.1819	-.1638	-.1837
.163		.0000					
.177			-.0532				
.193		.0838					
.229	.0426						
.250				-.2501	-.2861	-.2965	-.3667
.274			-.1236				
.339		-.1156					
.362	.0568						
.400				-.1467	-.2104		-.4495
.402			-.1323				
.497	.0000						
.550				-.1240	-.2043		
.565			.0000				
.600							-.3798
.650						-.3209	
.700	.0106				-.2219		
.725				-.2209			
.750						-.2541	-.2253
.760			-.2047				
.775				-.1904	-.2147		
.808			-.1602				
.834	-.1686						
.850				-.2105	-.1972	-.1446	
.857			-.1797				
.865	-.1386						
.900	-.1501			-.2[illegible]11			-.0079
.905			-.1396		-.1188		
.950				-.174[illegible]		-.0265	
.953			-.1[illegible]35				
.965	-.1699						

ARC11-716 IA14 O1+T12+S12N25+AT11 UPPER WING (RB1L10)

MACH (4) = 1.252 BETAO (1) = -8.080

SECTION (1)UPPER WING DEPENDENT VARIABLE CP

X/CW \ Y/BW	.2990	.3640	.4270	.5340	.6750	.7800	.8870
.000	.0265	.0183	.4860	.7694	.7234	.6618	.6873
.020				.4164	.4056	.3870	.4011
.025			.2895				
.040		.0354					
.045			.1849				
.050	-.0213			.1699	.1621	.1412	.1463
.080				-.0134			
.085			.0344				
.086		.0688					
.094	-.0681						
.150				-.2446	-.2243	-.1609	-.1215
.163		.0000					
.177			-.1466				
.193		.0164					
.229	-.0557						
.250				-.4451	-.3830	-.3518	-.3177
.274			-.2564				
.339		-.1938					
.362	.0429						
.400				-.5452	-.5170		-.4961
.402			-.3866				
.497	.0000						
.550				-.5858	-.5512		
.565			.0000				
.600							-.5166
.650						-.5356	
.700	-.3140				-.1986		
.725				-.2597			
.750						-.5474	-.5054
.760			-.1194				
.775				-.1759	-.4195		
.808			-.0051				
.834	-.0057						
.850				-.1242	-.2865	-.3936	
.857			.0389				
.865	.1115						
.900	.1096			-.0924			-.4212
.905			.0640		-.2540		
.950				-.0710		-.2704	
.953			.0608				
.965	.0366						

ARC11-716 IA14 O1+T12+S12N23+AT11 UPPER WING (RB1U18)

MACH (4) = 1.244 BETAO (2) = -4.030

SECTION (1)UPPER WING DEPENDENT VARIABLE CP

Y/BW	.2990	.3640	.4270	.5340	.6730	.7800	.8870
X/CW							
.000	-.0558	-.0414	.4148	.6883	.6395	.5763	.4039
.020				.3975	.3748	.3503	.3552
.025			.2594				
.040		-.0026					
.045			.1586				
.050	-.0973			.1613	.1434	.1172	.1165
.080				-.0151			
.085			.0367				
.086		.0462					
.094	-.1265						
.150				-.2339	-.2332	-.1744	-.1439
.163		.0000					
.177			-.1457				
.193		.0127					
.229	-.0810						
.250				-.4032	-.3757	-.3641	-.3431
.274			-.2553				
.339		-.2016					
.362	.0216						
.400				-.5071	-.5101		-.5133
.402			-.3899				
.497	.0000						
.550				-.5454	-.5412		
.565			.0000				
.600							-.5432
.650						-.5463	
.700	-.2886				-.1822		
.725				-.2287			
.750						-.5280	-.4971
.760			-.0905				
.775				-.1546	-.2989		
.808			.0435				
.834	-.0065						
.850				-.0701	-.1973	-.3025	
.857			.0371				
.865	.0835						
.900	.0680			-.0308			-.3655
.905			.0366		-.0840		
.950				-.0044		-.2484	
.953			.0165				
.965	-.0023						

ARC11-718 IA14 O1+T12+S12N25+AT11 UPPER WING (RB1U18)

MACH (4) = 1.249 BETAO (3) = .030

SECTION (1)UPPER WING DEPENDENT VARIABLE CP

Y/BW	.2990	.3640	.4270	.5340	.6730	.7800	.8870
X/CW							
.000	-.1173	-.1121	.3635	.6007	.5399	.4857	.5149
.020				.3369	.3205	.3005	.3057
.025			.2219				
.040		-.0459					
.045			.1353				
.050	-.1820			.1263	.1106	.0884	.0890
.050				-.0338			
.085			.0352				
.086		.0230					
.094	-.1795						
.150				-.2183	-.2266	-.1833	-.1539
.163		.0000					
.177			-.1192				
.193		.0143					
.229	-.0924						
.250				-.3728	-.3474	-.3450	-.3409
.274			-.1986				
.339		-.1635					
.362	.0088						
.400				-.4588	-.4627		-.5095
.402			-.3408				
.497	.0000						
.550				-.4814	-.4772		
.565			.0000				
.600							-.5100
.650						-.5322	
.700	-.1845				-.1750		
.725				-.1909			
.750						-.4803	-.4606
.760			-.0985				
.775				-.0658	-.1821		
.800			.0157				
.834	-.0295						
.850				-.0374	-.1114	-.2381	
.857			-.0128				
.865	.0251						
.900	.0064			-.0545			-.2640
.905			-.0115		.0030		
.950				-.0599		-.1844	
.953			-.0264				
.965	-.0479						

ARC11-716 IA14 O1+T12+S12N25+AT11 UPPER WING (RB1U18)

MACH (4) = 1.246 BETAO (4) = 4.090

SECTION (1)UPPER WING DEPENDENT VARIABLE CP

Y/BW	.2990	.3640	.4270	.5340	.6730	.7800	.8870
X/CW							
.000	-.2520	-.1344	.2681	.5139	.4430	.4012	.4653
.020				.2770	.2620	.2706	.2743
.025			.1514				
.040		-.0217					
.045			.0960				
.050	-.2618			.0903	.0738	.0764	.0740
.080				-.0439			
.085			.0028				
.086		.0232					
.094	-.2149						
.150				-.1910	-.2143	-.1663	-.1518
.163		.0000					
.177			-.0851				
.193		.0334					
.229	-.0678						
.250				-.3280	-.3238	-.3176	-.3342
.274			-.1699				
.339		-.1430					
.362	.0419						
.400				-.4156	-.4163		-.4942
.402			-.3164				
.497	.0000						
.550				-.3917	-.4348		
.565			.0000				
.600							-.4869
.650						-.4969	
.700	-.0960				-.1640		
.725				-.0845			
.750						-.2995	-.3544
.760			-.0981				
.775				-.0115	-.0625		
.800			.0009				
.834	-.0562						
.850				-.0301	-.0105	-.1555	
.857			-.0263				
.865	.0049						
.900	.0083			-.0622			-.1749
.905			-.0202		.0410		
.950				-.0636		.0804	
.953			-.0250				
.965	-.0314						

DATE 10 JAN 75 TABULATED PRESSURE DATA - IA14A - VOL. 6 (RB1U18)

ARC11-716 IA14 O1+T12+S12N25+AT11 UPPER WING

MACH (4) = 1.248 BETAO (5) = 0.150

SECTION (1)UPPER WING DEPENDENT VARIABLE CP

Y/BW	.2990	.3640	.4270	.5340	.6730	.7800	.8870
X/CW							
.000	-.4841	-.0935	.1085	.3505	.3838	.3158	.3427
.020				.2145	.2459	.2229	.2097
.025			.0798				
.040		-.0436					
.045			.0566				
.050	-.3583			.0811	.0777	.0502	.0384
.060				-.0267			
.085			.0206				
.086		-.0290					
.094	-.2307						
.150				-.1526	-.1838	-.1694	-.1647
.163		.0000					
.177			-.0695				
.193		.0662					
.229	.0390						
.250				-.2653	-.2779	-.3080	-.3323
.274			-.1469				
.339		-.1434					
.352	.0560						
.400				-.3458	-.3929		-.4787
.402			-.2710				
.497	.0000						
.550				-.1554	-.3704		
.565			.0000				
.600							-.4714
.650						-.4252	
.700	-.0525				-.1685		
.725				-.1116			
.750						-.1795	-.3922
.760			-.1201				
.775				-.0492	-.0622		
.800			-.0470				
.834	-.0626						
.850				-.0660	-.0448	-.0496	
.857			-.0652				
.865	-.0335						
.900	-.0478			-.0776			-.1157
.905			-.0650		-.0295		
.950				-.0814		.0615	
.953			-.0663				
.965	-.0951						

ARC11-716 IA14 O1+T12+S12N25+AT10 UPPER WING (RB1U24) (27 SEP 73)

REFERENCE DATA

SREF = 2.4210 SQ.FT. XMRP = 29.5800 INCHES
LREF = 38.7090 INCHES YMRP = .0000 INCHES
BREF = 38.7090 INCHES ZMRP = .0000 INCHES
SCALE = .0300 SCALE

PARAMETRIC DATA

ALPHAO = -10.000 ELEVON = .000
RUDDER = .000 SPDBRK = .000

MACH (1) = .902 BETAO (1) = -9.890

SECTION (1)UPPER WING DEPENDENT VARIABLE CP

Y/BW	.2990	.3640	.4270	.5340	.6730	.7800	.8870
X/CW							
.000	.0334	.0240	.2687	.3275	.2186	.1037	.1340
.020				.6113	.4917	.5903	.5513
.025			.5013				
.040		.2607					
.045			.4402				
.050	.1362			.4165	.4259	.4306	.3813
.080				.2541			
.085			.3115				
.086		.3537					
.094	.1515						
.150				.0302	.0530	.0709	.0357
.163		.0000					
.177			.0913				
.193		.2526					
.229	.2323						
.250				-.1336	-.1440	-.1787	-.2496
.274			-.0328				
.339		-.0016					
.362	.2175						
.400				-.0984	-.1765		-.3238
.402			-.0635				
.497	.0000						
.550				-.0424	-.1154		
.565			.0000				
.600							-.1737
.650						-.0999	
.700	.1400				-.1529		
.725				-.0013			
.750						.1496	.0842
.760			.0041				
.775				.1710	.1468		
.808			.1634				
.834	.0826						
.850				.1200	.1444	.1516	
.857			.1327				
.865	.1980						
.900	.1452			.1096			.1193
.905			.1028		.0975		

ARC11-716 IA14 O1+T12+S12N25+AT10 UPPER WING (RB1U24)

MACH (1) = .902 BETAO (1) = -9.890

SECTION (1)UPPER WING DEPENDENT VARIABLE CP

Y/BW	.2990	.3640	.4270	.5340	.6730	.7800	.8870
X/CW							
.950				.0510		.1199	
.953			.0402				
.965	.0340						

MACH (1) = .899 BETAO (2) = 10.090

SECTION (1)UPPER WING DEPENDENT VARIABLE CP

Y/BW	.2990	.3640	.4270	.5340	.6730	.7800	.8870
X/CW							
.000	-.1145	-.0055	.0183	-.0461	-.3235	-.4890	-.4973
.020				.4633	.3467	.2804	.1845
.025			.3288				
.040		.0812					
.045			.3266				
.050	-.0112			.3873	.3189	.2633	.1669
.080				.2939			
.085			.2784				
.086		.1897					
.094	.0286						
.150				.1320	.0984	.0638	-.0426
.163		.0000					
.177			.1323				
.193		.1785					
.229	.1096						
.250				-.0371	-.0779	-.1328	-.2700
.274			.0210				
.339		-.0174					
.362	.0887						
.400				-.1553	-.2270		-.4400
.402			-.1320				
.497	.0000						
.550				-.2834	-.3610		
.565			.0000				
.600							-.5926
.650						-.5100	
.700	-.1836				-.2425		
.725				-.3713			
.750						-.2044	-.1177
.760			-.3521				
.775				-.1622	-.1574		
.808			-.1697				
.834	-.2807						
.850				-.1032	-.0414	-.0044	

ARC11-716 IA14 O1+T12+S12N25+AT19 UPPER WING (RB1U24)

MACH (1) = .899 BETAO (2) = 10.090

SECTION (1)UPPER WING DEPENDENT VARIABLE CP

Y/BW	.2990	.3640	.4270	.5340	.6730	.7800	.8670
X/CW							
.857			-.1530				
.865	-.1932						
.900	-.1576			-.0643			.0486
.905			-.1292		.0035		
.950				-.0626		.0371	
.953			-.1448				
.965	-.1715						

ARC11-716 IA14 O1+T12+S12N25+AT10 UPPER WING (R81U25) (27 SEP 73)

REFERENCE DATA

SREF = 2.4210 SQ.FT. XMRP = 29.5800 INCHES
LREF = 38.7090 INCHES YMRP = .0000 INCHES
BREF = 38.7090 INCHES ZMRP = .0000 INCHES
SCALE = .0300 SCALE

PARAMETRIC DATA

ALPHAO = -8.000 ELEVON = .000
RUDDER = .000 SPDBRK = .000

MACH (1) = .899 BETAO (1) = -9.930

SECTION (1,UPPER WING DEPENDENT VARIABLE CP

Y/BW	.2990	.3640	.4270	.5340	.6730	.7800	.8870
X/CW							
.000	.0645	.0983	.3553	.4131	.3174	.2266	.2670
.020				.5449	.4127	.5372	.5108
.025			.4635				
.040		.2755					
.045			.3928				
.050	.1225			.3243	.3285	.3386	.2880
.080				.1481			
.085			.2331				
.086		.3334					
.094	.1309						
.150				-.0799	-.0726	-.0447	-.0687
.163		.0000					
.177			-.0102				
.193		.1859					
.229	.2006						
.250				-.2266	-.2586	-.3053	-.3696
.274			-.1203				
.339		-.0864					
.362	.1667						
.400				-.1497	-.2512		-.4443
.402			-.1274				
.497	.0000						
.550				-.0586	-.1511		
.565			.0000				
.600							-.2004
.650						-.1132	
.700	.1100				-.1548		
.725				.0042			
.750						.1442	.0715
.760			.0051				
.775				.1724	.1466		
.800			.1623				
.834	.0729						
.850				.1290	.1426	.1562	
.857			.1313				
.865	.1071						
.900	.1400			.1167			.1265
.905			.1040		.0978		

ARC11-716 IA14 O1+T12+S12N25+AT10 UPPER WING (RB1U25)

MACH (1) = .899 BETAO (1) = -9.930

SECTION (1)UPPER WING DEPENDENT VARIABLE CP

X/CW \ Y/BW	.2990	.3640	.4270	.5340	.6730	.7800	.8870
.950				.0661		.1268	
.993			.0510				
.985	.0311						

MACH (1) = .898 BETAO (2) = 10.090

SECTION (1)UPPER WING DEPENDENT VARIABLE CP

X/CW \ Y/BW	.2990	.3640	.4270	.5340	.6730	.7800	.8870
.000	-.1205	.0186	.0484	.0232	-.2028	-.3804	-.3646
.020				.4285	.2571	.2860	.2020
.025			.2755				
.040		.0723					
.045			.2684				
.050	-.0337			.3245	.2735	.2273	.1386
.060				.2288			
.065			.2234				
.086		.1568					
.094	.0108						
.150				.0572	.0269	.0023	-.0990
.163		.0000					
.177			.0822				
.193		.1502					
.229	.0963						
.250				-.0757	-.1484	-.1963	-.3316
.274			-.0327				
.339		-.0415					
.362	.0831						
.400				-.1808	-.2811		-.4934
.402			-.1703				
.497	.0000						
.550				-.2993	-.4010		
.565			.0000				
.600							-.6256
.650						-.5471	
.700	-.1993				-.2560		
.725				-.3928			
.750						-.2748	-.1358
.760			-.3529				
.775				-.2127	-.2443		
.808			-.1977				
.834	-.3078						
.850				-.0917	-.0566	-.0333	

ARC11-716 IA14 O1+T12+S12N25+AT10 UPPER WING (R81U25)

MACH (1) = .898 BETAO (2) = 10.090

SECTION (1)UPPER WING DEPENDENT VARIABLE CP

Y/BW	.2990	.3640	.4270	.5340	.6730	.7800	.8870
X/CW							
.857			-.1710				
.865	-.2247						
.900	-.1719			-.0515			.0481
.905			-.1362		.0023		
.950				-.0551		.0393	
.953			-.1350				
.965	-.1571						

ARC11-716 IA14 O1+T12+S12N25+AT10 UPPER WING (RB1UR6) (27 SEP 73)

REFERENCE DATA

SREF = 2.4210 SQ.FT. XMRP = 29.5000 INCHES
LREF = 38.7090 INCHES YMRP = .0000 INCHES
BREF = 38.7090 INCHES ZMRP = .0000 INCHES
SCALE = .0300 SCALE

PARAMETRIC DATA

ALPHAO = -6.000 ELEVON = .000
RUDDER = .000 SPOBRK = .000

MACH (1) = .897 BETAO (1) = -9.940

SECTION (1)UPPER WING DEPENDENT VARIABLE CP

Y/BW	.2990	.3640	.4270	.5340	.6730	.7800	.8870
X/CW							
.000	.0901	.1504	.4214	.4969	.4207	.3362	.3682
.020				.4693	.4222	.4596	.4430
.025			.4115				
.040		.2774					
.045			.3108				
.050	.1063			.2189	.2191	.2227	.1763
.060				.0259			
.065			.1489				
.086		.3065					
.094	.1117						
.150				-.2015	-.1977	-.1764	-.1876
.163		.0000					
.177			-.1145				
.193		.1196					
.229	.1783						
.250				-.3448	-.4066	-.4519	-.4904
.274			-.2208				
.339		-.1747					
.362	.1132						
.400				-.2100	-.3359		-.6086
.402			-.1950				
.497	.0000						
.550				-.0887	-.1732		
.565			.0000				
.600							-.1990
.650						-.1126	
.700	.0855				-.1637		
.725				-.0004			
.750						.1355	.0509
.760			.0084				
.775				.1660	.1410		
.808			.1580				
.834	.0665						
.850				.1258	.1420	.1506	
.857			.1308				
.865	.1793						
.900	.1425			.1164			.1237
.905			.1020		.0984		

ARC11-716 IA14 O1+T12+S12N25+AT10 UPPER WING (RB1U26)

MACH (1) = .697 BETAO (1) = -9.940

SECTION (1)UPPER WING DEPENDENT VARIABLE CP

X/CW \ Y/BW	.2990	.3640	.4270	.5340	.6730	.7800	.8870
.950				.0661		.1222	
.955			.0499				
.965	.0344						

MACH (1) = .898 BETAO (2) = 10.070

SECTION (1)UPPER WING DEPENDENT VARIABLE CP

X/CW \ Y/BW	.2990	.3640	.4270	.5340	.6730	.7800	.8870
.000	-.1770	.0203	.0813	.0875	-.0703	-.2472	-.2092
.020				.3676	.3367	.2752	.2027
.025			.2226				
.040		.0657					
.045			.2143				
.050	-.0657			.2559	.2195	.1793	.0927
.080				.1480			
.085			.1781				
.086		.1342					
.094	-.0045						
.150				-.0189	-.0401	-.0664	-.1634
.163		.0000					
.177			.0360				
.193		.1165					
.229	.0791						
.250				-.1365	-.2111	-.2560	-.4060
.274			-.0740				
.339		-.0644					
.362	.0737						
.400				-.2196	-.3256		-.5520
.402			-.2012				
.497	.0000						
.590				-.3176	-.4318		
.595			.0000				
.600							-.6541
.650						-.5048	
.700	-.2107				-.2556		
.725				-.3063			
.750						-.3264	-.1891
.760			-.3741				
.775				-.2727	-.3132		
.800			-.2535				
.834	-.3204						
.850				-.1184	-.0829	-.0635	

ARC11-716 IA14 O1+T12+S12N25+AT10 UPPER WING (RB1U26)

MACH (1) = .898 BETAO (2) = 10.070

SECTION (1)UPPER WING DEPENDENT VARIABLE CP

Y/BW	.2990	.3640	.4270	.5340	.6730	.7800	.8870
X/CW							
.857			-.1804				
.865	-.2613						
.900	-.2070			-.0633			.0044
.905			-.1368		.0004		
.950				-.0532		.0234	
.953			-.1353				
.965	-.1730						

ARC11-716 IA14 O1+T12+S12N25+AT10 UPPER WING (RB1U27) (27 SEP 73)

REFERENCE DATA

SREF = 2.4210 SQ.FT. XMRP = 29.5800 INCHES
LREF = 38.7090 INCHES YMRP = .0000 INCHES
BREF = 38.7090 INCHES ZMRP = .0000 INCHES
SCALE = .0300 SCALE

PARAMETRIC DATA

ALFMAO = -4.000 ELEVON = .000
RUDDER = .000 SPOBRK = .000

MACH (1) = .899 BETAO (1) = -9.990

SECTION (1)UPPER WING DEPENDENT VARIABLE CP

Y/BW	.2990	.3640	.4270	.5340	.6730	.7800	.8870
X/CW							
.000	.0977	.1888	.4715	.5821	.5246	.4620	.4766
.020				.3780	.3748	.3475	.3319
.025			.3467				
.040		.2716					
.045			.2317				
.050	.0889			.1016	.0877	.0880	.0364
.080				-.1083			
.085			.0447				
.086		.2780					
.094	.0933						
.150				-.3413	-.3486	-.3269	-.3191
.163		:0000					
.177			-.2213				
.193		.0526					
.229	.1577						
.250				-.4734	-.5573	-.5867	-.6001
.274			-.3206				
.339		-.2635					
.362	.0287						
.400				-.2556	-.3571		-.8226
.402			-.2744				
.497	.0000						
.550				-.1106	-.1859		
.565			.0000				
.600							-.0986
.650						-.0841	
.700	.0660				-.1569		
.725				.0068			
.750						.1400	.0546
.760			.0103				
.775				.1658	.1448		
.808			.1567				
.834	.0687						
.850				.1308	.1417	.1496	
.857			.1312				
.865	.1840						
.900	.1469			.1167			.1170
.905			.1037		.0942		

ARC11-716 IA14 O1+T12+S12N25+A710 UPPER WING (RB1U27)

MACH (1) = .899 BETAO (1) = -9.990

SECTION (1)UPPER WING DEPENDENT VARIABLE CP

Y/BW	.2990	.3640	.4270	.5340	.6730	.7800	.8870
X/CW							
.950				.0684		.1076	
.953			.3519				
.965	.0446						

ARC11-716 IA14 O1+T12+S12N25+AT10 UPPER WING (RB1UEC) (27 SEP 73)

REFERENCE DATA

SREF = 2.4210 SQ.FT. XMRP = 29.5800 INCHES
LREF = 38.7090 INCHES YMRP = .0000 INCHES
BREF = 38.7090 INCHES ZMRP = .0000 INCHES
SCALE = .0300 SCALE

PARAMETRIC DATA

ALPHAO = .000 ELEVON = .000
RUDDER = .000 SPDBRK = .000

MACH (1) = 1.246 BETAO (1) = -10.080

SECTION (1)UPPER WING DEPENDENT VARIABLE CP

Y/BW	.2990	.3640	.4270	.5340	.6730	.7800	.8870
X/CW							
.000	.0481	.0739	.5478	.7921	.7296	.6848	.7411
.020				.4519	.4397	.4189	.4459
.025			.3289				
.040		.0770					
.045			.2517				
.050	.0169			.2042	.1877	.1889	.1807
.080				.0107			
.085			.0955				
.086		.1123					
.094	-.0251						
.150				-.2180	-.1972	-.1295	-.0938
.163		.0000					
.177			-.1167				
.193		.0449					
.229	-.0159						
.250				-.3316	-.3534	-.3272	-.2944
.274			-.2283				
.339		-.1589					
.362	.0834						
.400				-.4351	-.4939		-.4699
.402			-.3802				
.497	.0000						
.550				-.4742	-.5316		
.565			.0000				
.600							-.4983
.650						-.5253	
.700	-.2934				-.1860		
.725				-.2155			
.750						-.5103	-.4919
.760			-.1307				
.775				-.1007	-.4376		
.800			.0117				
.834	.0108						
.850				-.0235	-.2583	-.3937	
.857			.0582				
.865	.1293						
.900	.1300			.0159			-.4080
.905			.0863		-.2070		

DATE 10 JAN 75 TABULATED PRESSURE DATA - IA14A - VOL. 6

ARC11-716 IA14 O1+T12+S12N25+AT10 UPPER WING (RB1U20)

MACH (1) = 1.246 BETAO (1) = -10.080

SECTION (1)UPPER WING DEPENDENT VARIABLE CP

Y/BW	.2990	.3640	.4270	.5340	.6730	.7800	.8870
X/CW							
.950				.0362		-.2448	
.955			.0800				
.965	.0549						

MACH (1) = 1.245 BETAO (2) = -7.960

SECTION (1)UPPER WING DEPENDENT VARIABLE CP

Y/BW	.2990	.3640	.4270	.5340	.6730	.7800	.8870
X/CW							
.000	.0186	.0310	.4955	.7589	.6977	.6451	.6864
.020				.4341	.4202	.3991	.4281
.025			.2965				
.040		.0519					
.045			.2243				
.050	-.0213			.1904	.1712	.1736	.1731
.080				.0045			
.085			.0816				
.086		.0905					
.094	-.0692						
.150				-.2227	-.2003	-.1453	-.1056
.163		.0000					
.177			-.1253				
.193		.0144					
.229	-.0462						
.250				-.3367	-.3595	-.3399	-.3065
.274			-.2383				
.339		-.1758					
.362	.0494						
.400				-.4413	-.5001		-.4977
.402			-.3751				
.497	.0000						
.550				-.4788	-.5359		
.565			.0000				
.600							-.5156
.650						-.5328	
.700	-.3107				-.1806		
.725				-.1794			
.750						-.5279	-.5005
.760			-.1315				
.775				-.1184	-.3725		
.808			.0211				
.834	.0074						
.850				-.0567	-.2728	-.3392	

ARC11-716 IA14 O1+T12+S12N25+AT10 UPPER WING (RB1U28)

MACH (1) = 1.245 BETAO (2) = -7.960

SECTION (1)UPPER WING DEPENDENT VARIABLE CP

X/CW \ Y/BW	.2990	.3640	.4270	.5340	.6730	.7800	.8870
.857			.0587				
.865	.1213						
.900	.1126			-.0156			-.4159
.905			.0625		-.2260		
.950				.0194		-.2204	
.953			.0671				
.965	.0423						

MACH (1) = 1.248 BETAO (3) = -6.020

SECTION (1)UPPER WING DEPENDENT VARIABLE CP

X/CW \ Y/BW	.2990	.3640	.4270	.5340	.6730	.7800	.8870
.000	-.0177	-.0396	.4572	.7219	.6626	.6066	.6384
.020				.4217	.4054	.3775	.3935
.025			.2742				
.040		.0339					
.045			.2057				
.050	-.0572			.1051	.1623	.1590	.1481
.080				.0020			
.085			.0646				
.086		.0679					
.094	-.0909						
.150				.2173	-.2113	-.1510	-.1207
.163		.0000					
.177			-.1169				
.193		.0153					
.229	-.0605						
.290				-.3187	-.3562	-.3439	-.3159
.274			-.2305				
.339		-.1740					
.362	.0402						
.400				-.4344	-.4945		-.4997
.402			-.3729				
.497	.0000						
.550				-.4794	-.5326		
.565			.0000				
.600							-.5291
.650						-.5336	
.700	-.3045				-.1827		
.725				-.1779			
.750						-.5235	-.4966
.700			-.1215				

ARC11-716 IA14 O1+T12+S12N25+AT10 UPPER WING (RB1U28)

MACH (1) = 1.248 BETAO (3) = -6.020

SECTION (1)UPPER WING DEPENDENT VARIABLE CP

Y/BW	.2990	.3640	.4270	.5340	.6730	.7800	.8870
X/CW							
.775				-.1311	-.3362		
.808			.0375				
.834	.0033						
.850				-.0642	-.2692	-.3074	
.857			.0521				
.865	.1035						
.900	.0904			-.0100			-.4080
.905			.0626		-.1518		
.950				.0361		-.2165	
.953			.0422				
.965	.0172						

MACH (1) = 1.247 BETAO (4) = -3.950

SECTION (1)UPPER WING DEPENDENT VARIABLE CP

Y/BW	.2990	.3640	.4270	.5340	.6730	.7800	.8870
X/CW							
.000	-.0603	-.0388	.4157	.6842	.6249	.5627	.5922
.020				.4077	.3851	.3547	.3678
.025			.2399				
.040		.0075					
.045			.1721				
.050	-.0979			.1754	.1507	.1439	.1325
.080				-.0009			
.085			.0557				
.086		.0519					
.094	-.1236						
.150				-.2165	-.2161	-.1625	-.1304
.163		.0000					
.177			-.1199				
.193		.0036					
.229	-.0744						
.250				-.3258	-.3511	-.3478	-.3273
.274			-.2374				
.339		-.1051					
.362	.0305						
.400				-.4260	-.4886		-.5059
.402			-.3757				
.497	.0000						
.550				-.4670	-.5249		
.565			.0000				
.600							-.5329
.650						-.5391	

ARC11-716 IA14 O1+T12+S12N25+AT10 UPPER WING (RB1U28)

MACH (1) = 1.247 BETAO (4) = -3.950

SECTION (1)UPPER WING DEPENDENT VARIABLE CP

X/CW \ Y/BW	.2990	.3640	.4270	.5340	.6730	.7800	.8870
.700	-.2688				-.1686		
.725				-.1697			
.750						-.50 .	-.4936
.760			-.1157				
.775				-.0928	-.2635		
.808			.0459				
.834	.0080						
.850				-.0143	-.1837	-.2811	
.857			.0434				
.865	.0899						
.900	.0741			.0196			-.3794
.905			.0457		-.0841		
.950				.0389		-.2178	
.953			.0178				
.965	.0032						

MACH (1) = 1.246 BETAO (5) = -2.040

SECTION (1)UPPER WING DEPENDENT VARIABLE CP

X/CW \ Y/BW	.2990	.3640	.4270	.5340	.6730	.7800	.8870
.000	-.1007	-.0694	.3757	.6437	.5786	.5249	.5507
.020				.3828	.3620	.3309	.3403
.025			.2204				
.040		-.0177					
.045			.1629				
.050	-.1386			.1587	.1352	.1289	.1152
.080				-.0065			
.085			.0457				
.086		.0414					
.094	-.1540						
.150				-.2087	-.2209	-.1693	-.1392
.163		.0000					
.177			-.1112				
.193		-.0013					
.229	-.0833						
.250				-.3163	-.3465	-.3433	-.3337
.274			-.2118				
.339		-.1661					
.362	.0077						
.400				-.4093	-.4722		-.5129
.402			-.3497				
.497	.0000						

ARC11-716 IA14 O1+T12+S12N25+AT10 UPPER WING (RB1U28)

MACH (1) = 1.246 BETAO (5) = -2.040

SECTION (1)UPPER WING DEPENDENT VARIABLE CP

X/CW \ Y/BW	.2990	.3640	.4270	.5340	.6730	.7800	.8870
.550				-.4356	-.4979		
.565			.0000				
.600							-.5134
.650						-.5415	
.700	-.2248				-.1616		
.725				-.1526			
.750						-.4778	-.4697
.760			-.1104				
.775				-.0461	-.2079		
.808			.0416				
.834	-.0031						
.850				.0081	-.1404	-.2431	
.857			.0209				
.865	.0636						
.900	.0439			.0084			-.2775
.905			.0232		-.0174		
.950				.0120		-.2169	
.953			-.0046				
.965	-.0255						

MACH (1) = 1.246 BETAO (6) = .010

SECTION (1)UPPER WING DEPENDENT VARIABLE CP

X/CW \ Y/BW	.2990	.3640	.4270	.5340	.6730	.7800	.8870
.000	-.1260	-.0978	.3867	.5930	.5249	.4737	.5039
.020				.3413	.3254	.3034	.3161
.025			.2101				
.040		-.0379					
.045			.1576				
.050	-.1883			.1336	.1137	.1100	.1001
.080				-.0264			
.085			.0362				
.086		.0346					
.094	-.1849						
.150				-.2006	-.2177	-.1736	-.1433
.163		.0000					
.177			-.0991				
.193		.0101					
.229	-.0960						
.250				-.3258	-.3526	-.3572	-.3333
.274			-.1932				
.339		-.1581					

ARC11-716 IA14 O!+T12+S12N25+AT10 UPPER WING (RB1U28)

MACH (1) = 1.246 BETAO (6) = .010

SECTION (1)UPPER WING DEPENDENT VARIABLE CP

Y/BW	.2990	.3640	.4270	.5340	.6730	.7800	.8870
X/CW							
.362	.0172						
.400				-.4245	-.4552		-.5118
.492			-.3409				
.497	.0000						
.550				-.4424	-.4898		
.565			.0000				
.600							-.5039
.650						-.5407	
.700	-.1658				-.1540		
.725				-.1556			
.750						-.4409	-.4532
.760			-.1151				
.775				-.0328	-.1748		
.808			.0127				
.834	-.0270						
.850				-.0173	-.1080	-.2221	
.857			-.0136				
.865	.0291						
.900	.0111			-.0381			-.2487
.935			-.0064		.0113		
.950				-.0408		-.1842	
.953			-.0254				
.965	-.0477						

ARC11-716 IA14 O1+T12+S12N25+AT10 UPPER WING (RB1U29) (27 SEP 73)

REFERENCE DATA

SREF = 2.4210 SQ.FT. XMRP = 29.5800 INCHES
LREF = 38.7090 INCHES YMRP = .0000 INCHES
BREF = 38.7090 INCHES ZMRP = .0000 INCHES
SCALE = .0300 SCALE

PARAMETRIC DATA

ALPHAO = -10.000 ELEVON = .000
RUDDER = .000 SPOBRK = .000

MACH (1) = 1.245 BETAO (1) = .030

SECTION (1)UPPER WING DEPENDENT VARIABLE CP

Y/BW	.2990	.3640	.4270	.5340	.6730	.7800	.8870
X/CW							
.000	-.1571	-.2840	.0786	.3125	.1891	.1072	.1514
.020				.5799	.5007	.5187	.5216
.025			.3170				
.040		-.1039					
.045			.3196				
.050	-.0706			.4435	.4246	.4316	.4243
.080				.3202			
.085			.2761				
.086		.0554					
.094	-.0278						
.150				.1346	.1595	.1500	.1878
.163		.0000					
.177			.1656				
.193		.1533					
.229	-.0131						
.250				-.0164	-.0182	-.0095	-.0356
.274			.0541				
.339		.0382					
.362	.1220						
.400				-.1200	-.1497		-.2458
.402			-.0930				
.497	.0000						
.550				.1674	.1287		
.565			.0000				
.600							-.0558
.650						.0057	
.700	.2153				-.1115		
.725				.0634			
.750						.0317	-.0282
.760			-.0043				
.775				.0977	.0599		
.808			.0899				
.834	.0817						
.850				.0804	.0604	.0610	
.857			.0983				
.865	.1272						
.900	.1521			.1026			.1232
.905			.1807		.1061		

ARC11-716 IA14 O1+:2+S12N25+AT10 UPPER WING (RB1U29)

MACH (1) = 1.245 BETAO (1) = .030

SECTION (1)UPPER WING DEPENDENT VARIABLE CP

Y/BW	.2990	.3640	.4270	.5540	.6730	.7800	.8870
X/CW							
.950				.1728		.1419	
.955			.1725				
.965	.1900						

ARC11-716 IA14 O1+T12+S12N25+AT11 UPPER WING (RB1U30) (02 OCT 73)

REFERENCE DATA

SREF = 2.4210 SQ.FT. XMRP = 29.5800 INCHES
LREF = 35.7090 INCHES YMRP = .0000 INCHES
BREF = 38.7090 INCHES ZMRP = .0000 INCHES
SCALE = .0300 SCALE

PARAMETRIC DATA

ALPHAO = .000 ELEVON = .000
RUDDER = .000 SPOBRK = .000

MACH (1) = .972 BETAO (1) = .040

SECTION (1)UPPER WING DEPENDENT VARIABLE CP

Y/BW	.2990	.3640	.4270	.5340	.6730	.7800	.8870
X/CW							
.000	-.2807	.1329	.4198	.5412	.4774	.4335	.4546
.020				.2686	.2080	.1818	.1366
.025			.2496				
.040		.2092					
.045			.1608				
.050	.0001			.0387	-.0277	-.0556	-.1375
.080				-.1378			
.085			.0195				
.086		.2233					
.094	.0442						
.150				-.3237	-.3774	-.3804	-.3982
.163		.0000					
.177			-.1831				
.193		.0517					
.229	.1488						
.250				-.4610	-.5033	-.5609	-.6119
.274			-.2890				
.339		-.2592					
.362	.0787						
.400				-.4601	-.5982		-.8094
.402			-.3889				
.497	.0000						
.550				-.2476	-.3635		
.565			.0000				
.600							-.7758
.650						-.4611	
.700	-.0524				-.2752		
.725				-.3224			
.750						-.3249	-.2594
.760			-.2679				
.775				-.3030	-.3104		
.808			-.2594				
.834	-.2605						
.850				-.2756	-.1640	-.0634	
.857			-.2595				
.865	-.2144						
.900	-.2255			-.1540			-.0158
.905			-.1687		-.0593		

ARC11-716 IA14 O1+T12+S12N25+AT11 UPPER WING (RB1U30)

MACH (1) = .972 BETAO (1) = .040

SECTION (1)UPPER WING DEPENDENT VARIABLE CP

X/CW \ Y/BW	.2990	.3640	.4270	.5340	.6730	.7800	.8870
.950				-.0904		-.0269	
.953			-.1006				
.965	-.1945						

MACH (2) = 1.002 BETAO (1) = .040

SECTION (1)UPPER WING DEPENDENT VARIABLE CP

X/CW \ Y/BW	.2990	.3640	.4270	.5340	.6730	.7800	.8870
.000	-.3165	.1039	.4383	.5683	.5108	.4687	.4889
.020				.2886	.2366	.2152	.1741
.025			.2572				
.040		.1961					
.045			.1765				
.050	-.3227			.0656	.0100	-.0151	-.0975
.080				-.1032			
.085			.0404				
.086		.2275					
.094	-.1476						
.150				-.2847	-.3244	-.3255	-.3455
.163		.0000					
.177			-.1422				
.193		.0771					
.229	.1433						
.250				-.3992	-.4409	-.4995	-.5531
.274			-.2353				
.339		-.2086					
.362	.1028						
.450				-.3866	-.5263		-.7412
.492			-.3235				
.497	.0000						
.550				-.1870	-.3084		
.565			.0000				
.600							-.7110
.650						-.4007	
.700	-.0040				-.2627		
.725				-.2599			
.750						-.2706	-.2101
.760			-.2241				
.775				-.2371	-.2332		
.808			-.1977				
.834	-.2142						
.850				-.2067	-.1102	-.0132	

ARC11-716 IA14 O1+T12+S12N25+AT11 UPPER WING (RB1U30)

MACH (2) = 1.002 BETAO (1) = .040

SECTION (1)UPPER WING DEPENDENT VARIABLE CP

Y/BW	.2990	.3640	.4270	.5340	.6730	.7800	.8870
X/CW							
.857			-.1949				
.865	-.1541						
.900	-.1620			-.0919			.0317
.935			-.1079		-.0118		
.950				-.0387		.0232	
.953			-.0548				
.965	-.1051						

MACH = 1.025 BETAO (1) = .040

SECTION (1)UPPER WING DEPENDENT VARIABLE CP

Y/BW	.2990	.3640	.4270	.5340	.6730	.7800	.8870
X/CW							
.000	-.2940	.0613	.4185	.5644	.5181	.4831	.5095
.020				.2870	.2403	.2193	.1836
.025			.2444				
.040		.1683					
.045			.1590				
.050	-.3136			.0669	.0129	-.0064	-.0820
.080				-.0919			
.085			.0340				
.086		.1963					
.094	-.1985						
[illegible]				-.2909	-.3213	-.3174	-.3268
[illegible]		.0000					
[illegible]			-.1414				
[illegible]		.0593					
.229	.0890						
.250				-.4674	-.4238	-.4859	-.5322
.274			-.2443				
.339		-.2128					
.362	.0856						
.400				-.4485	-.5645		-.7131
.402			-.3061				
.497	.0000						
.550				-.2132	-.2703		
.565			.0000				
.600							-.6931
.650						-.3549	
.700	.0153				-.2458		
.725				-.2890			
.750						-.2289	-.1899
.760			-.2011				

ARC11-716 IA14 O1+T12+S12N25+AT11 UPPER WING (R81U30)

MACH (3) = 1.025 BETAO (1) = .040

SECTION (1)UPPER WING DEPENDENT VARIABLE CP

Y/BW	.2990	.3640	.4270	.5340	.6790	.7800	.8470
X/CW							
.775				-.2648	-.2192		
.808			-.1664				
.834	-.1827						
.850				-.2345	-.0010	.0192	
.857			-.1640				
.865	-.1183						
.900	-.1257			-.1263			.0587
.905			-.0696		.0171		
.930				-.0554		.0552	
.953			-.0318				
.965	-.0894						

ARC11-716 IA14 OI+T12+S12N25+AT10 UPPER WING (RB1U31) (06 FEB 74)

REFERENCE DATA

SREF = 2.4210 SQ.FT. XMRP = 29.5800 INCHES
LREF = 38.7090 INCHES YMRP = .0000 INCHES
BREF = 38.7090 INCHES ZMRP = .0000 INCHES
SCALE = .0300 SCALE

PARAMETRIC DATA

MACH = .900 ELEVON = .000
RUDDER = .000 SPOBRK = .000

ALPHAO(1) = -10.140 BETAO (1) = -8.370

SECTION (1)UPPER WING DEPENDENT VARIABLE CP

Y/BW	.2990	.3640	.4270	.5340	.6730	.7800	.8870
X/CW							
.000	.0155	.0114	.2465	.3000	.1720	.0533	.1028
.020				.5903	.4273	.5662	.5236
.025			.4770				
.040		.2466					
.045			.4218				
.050	.1275			.4071	.4119	.4090	.3555
.080				.2493			
.085			.2979				
.086		.3355					
.094	.1266						
.150				.0396	.0464	.0608	.0115
.163		.0000					
.177			.0772				
.193		.2438					
.229	.2111						
.250				-.1267	-.1509	-.1819	-.2668
.274			-.0334				
.339		-.0120					
.362	.2015						
.400				-.1068	-.1932		-.3532
.402			-.0811				
.497	.0000						
.550				-.0560	-.1481		
.565			.0000				
.600							-.1866
.650						-.1197	
.700	.1067				-.1459		
.725				-.0117			
.750						.1261	.0581
.760			-.0179				
.775				.1507	.1293		
.808			.1554				
.834	.0458						
.850				.1074	.1255	.1324	
.857			.1189				
.865	.1644						
.900	.1291			.0958			.0985
.905			.0887		.0790		

ARC11-716 IA14 O1+T12+S12N25+AT10 UPPER WING (RB1U31)

ALPHAO(1) = -10.140 BETAO (1) = -8.370

SECTION (1)UPPER WING DEPENDENT VARIABLE CP

Y/BW	.2990	.3640	.4270	.5340	.6730	.7800	.8870
X/CW							
.950				.0407		.0997	
.955			.0327				
.965	.0062						

ALPHAO(1) = -10.130 BETAO (2) = -6.560

SECTION (1)UPPER WING DEPENDENT VARIABLE CP

Y/BW	.2990	.3640	.4270	.5340	.6730	.7800	.8870
X/CW							
.000	.0119	-.0057	.2039	.2567	.1174	-.0098	.0472
.020				.5863	.4050	.5437	.4952
.025			.4568				
.040		.2183					
.045			.4181				
.050	.1122			.4088	.4042	.4035	.3438
.080				.2597			
.085			.3028				
.086		.3149					
.094	.1171						
.150				.0430	.0558	.0718	.0102
.163		.0000					
.177			.0883				
.193		.2459					
.229	.2054						
.250				-.1142	-.1367	-.1666	-.2596
.274			-.0262				
.339		-.0047					
.362	.2069						
.400				-.1077	-.1952		-.3522
.402			-.0843				
.497	.0000						
.550				-.0782	-.1604		
.565			.0000				
.600							-.1948
.550						-.1284	
.700	.0860				-.1326		
.725				-.0330			
.750						.1115	.0500
.760			-.0423				
.775				.1306	.1098		
.808			.1285				
.834	.0189						
.850				.0931	.1075	.1166	

ARC11-716 IA14 OI+T12+S12N25+AT10 UPPER WING (RB1U31)

ALPHAO(1) = -10.130 BETAO (2) = -6.560

SECTION (1)UPPER WING DEPENDENT VARIABLE CP

Y/BW	.2990	.3640	.4270	.5340	.6730	.7800	.8870
X/CW							
.857			.0956				
.865	.1409						
.900	.1126			.0863			.0894
.905			.0677		.0621		
.950				.0332		.0839	
.953			.0156				
.965	-.0072						

ALPHAO(1) = -10.130 BETAO (3) = -4.040

SECTION (1)UPPER WING DEPENDENT VARIABLE CP

Y/BW	.2990	.3640	.4270	.5340	.6730	.7800	.8870
X/CW							
.000	.0026	-.0240	.1716	.2086	.0635	-.0654	-.0165
.020				.5694	.3831	.5190	.4682
.025			.4465				
.040		.2028					
.045			.4105				
.050	.1012			.4110	.3982	.3915	.3301
.080				.2684			
.085			.3131				
.086		.3086					
.094	.1064						
.150				.0602	.0620	.0747	.0081
.163		.0000					
.177			.1087				
.193		.2487					
.229	.1991						
.250				-.1027	-.1259	-.1579	-.2515
.274			-.0137				
.339		.0041					
.362	.2076						
.400				-.1188	-.1954		-.3577
.402			-.0911				
.497	.0000						
.550				-.1022	-.1836		
.565			.0000				
.600							-.2061
.650						-.1461	
.700	.0564				-.1289		
.725				-.0579			
.750						.0928	.0384
.760			-.0658				

ARC11-716 IA14 O1+T12+S12N25+AT10 UPPER WING (RB1U31)

ALPHAO(1) = -10.130 BETAO (3) = -4.840

SECTION (1)UPPER WING DEPENDENT VARIABLE CP

X/CW \ Y/BW	.2990	.3640	.4270	.5340	.6730	.7800	.8870
.775				.1078	.0932		
.808			.1042				
.834	-.0061						
.850				.0748	.0915	.1013	
.857			.0733				
.865	.1104						
.900	.0825			.0660			.0735
.905			.0518		.0465		
.950				.0166		.0656	
.953			.0009				
.965	-.0262						

ALPHAO(1) = -10.080 BETAO (4) = -3.250

SECTION (1)UPPER WING DEPENDENT VARIABLE CP

X/CW \ Y/BW	.2990	.3640	.4270	.5340	.6730	.7800	.8870
.000	.0005	-.0290	.1496	.1705	.0141	-.1258	-.0610
.020				.5606	.3612	.4966	.4398
.025			.4285				
.040		.1871					
.045			.3982				
.050	.0939			.4052	.3894	.3817	.3176
.080				.2717			
.085			.3105				
.086		2948					
.094	.1024						
.150				.0692	.0650	.0762	.0089
.163		.0000					
.177			.1168				
.193		.2491					
.229	.1911						
.250				-.0968	-.1235	-.1559	-.2476
.274			-.0064				
.339		.0130					
.362	.2053						
.400				-.1243	-.2082		-.3673
.402			-.0906				
.497	.0000						
.550				-.1250	-.2142		
.565			.0000				
.600							-.2193
.650						-.1674	

ARC11-716 IA14 O1+T12+S12N25+AT10 UPPER WING (R01U31)

ALPHAO(1) = -10.080 BETAO (4) = -3.250

SECTION (1)UPPER WING DEPENDENT VARIABLE CP

Y/BW	.2990	.3640	.4270	.5340	.6730	.7800	.8870
X/CW							
.700	.0391				-.1360		
.725				-.0806			
.750						.0789	.0216
.760			-.0857				
.775				.0860	.0730		
.808			.0845				
.834	-.0317						
.850				.0525	.0708	.0869	
.857			.0593				
.865	.0893						
.900	.0649			.0468			.0584
.905			.0360		.0310		
.950				.0026		.0463	
.953			-.0111				
.965	-.0357						

ALPHAO(1) = -10.040 BETAO (5) = -1.600

SECTION (1)UPPER WING DEPENDENT VARIABLE CP

Y/BW	.2990	.3640	.4270	.5340	.6730	.7800	.8870
X/CW							
.000	-.0001	-.0415	.1229	.1250	-.0308	-.1754	-.1223
.020				.5381	.3411	.4702	.4112
.025			.4086				
.040		.1693					
.045			.3957				
.050	.0713			.4023	.3813	.3684	.3048
.080				.2677			
.085			.3098				
.086		.2798					
.094	.0894						
.150				.0690	.0710	.0772	.0063
.163		.0000					
.177			.1207				
.193		.2502					
.229	.1805						
.250				-.0862	-.1165	-.1524	-.2498
.274			.0013				
.339		.0226					
.362	.2033						
.400				-.1252	-.2124		-.3808
.492			-.1024				
.497	.0000						

ARC11-716 IA14 O1+T12+S12N25+AT10 UPPER WING (RB1U31)

ALPHAO(1) = -10.040 BETAO (5) = -1.600

SECTION (1)UPPER WING DEPENDENT VARIABLE CP

X/CW \ Y/BW	.2990	.3640	.4270	.5340	.6730	.7800	.8870
.550				-.1456	-.2388		
.585			.0000				
.600							-.2213
.650						-.1807	
.700	.0155				-.1466		
.725				-.1017			
.750						.0670	.0170
.760			-.1191				
.775				.0680	.0603		
.808			.0524				
.834	-.0564						
.850				.0411	.0630	.0774	
.857			.0329				
.865	.0604						
.900	.0429			.0384			.0547
.905			.0138		.0216		
.950				-.0062		.0414	
.953			-.0300				
.965	-.0551						

ALPHAO(1) = -10.040 BETAO (6) = .100

SECTION (1)UPPER WING DEPENDENT VARIABLE CP

X/CW \ Y/BW	.2990	.3640	.4270	.5340	.6730	.7800	.8870
.000	.0082	-.0129	.1086	.0828	-.0892	-.2344	-.1876
.020				.5207	.3174	.4408	.3771
.025			.3893				
.040		.1602					
.045			.3702				
.050	.0669			.3920	.3688	.3517	.2844
.060				.2679			
.073			.3027				
.086		.2634					
.094	.0889						
.150				.0721	.0752	.0767	-.0046
.163		.0000					
.177			.1240				
.193		.2465					
.229	.1794						
.250				-.0703	-.1111	-.1481	-.2489
.274			.0059				
.339		.0256					

ARC11-716 IA14 D1+T12+S12N25+AT10 UPPER WING (RB1U31)

ALPHAD(1) = -10.040 BETAD (6) = .100

SECTION (1)UPPER WING DEPENDENT VARIABLE CP

Y/BW	.2990	.3640	.4270	.5340	.6730	.7800	.8870
X/CW							
.362	.2030						
.400				-.1344	-.2165		-.3902
.492			-.1042				
.497	.0000						
.550				-.1702	-.2591		
.565			.0000				
.600							-.2162
.650						-.1931	
.700	-.0086				-.1507		
.725				-.1241			
.750						.0589	.0128
.760			-.1469				
.775				.0501	.0476		
.808			.0330				
.834	-.0768						
.850				.0286	.0526	.0688	
.857			.0188				
.865	.0450						
.900	.0301			.0296			.0539
.905			.0009		.0174		
.950				-.0108		.0412	
.953			-.0372				
.965	-.0636						

ALPHAD(1) = -10.040 BETAD (7) = 1.810

SECTION (1)UPPER WING DEPENDENT VARIABLE CP

Y/BW	.2990	.3640	.4270	.5340	.6730	.7800	.8970
X/CW							
.000	.0210	.0198	.1058	.0563	-.1310	-.2863	-.2473
.020				.5040	.2846	.4143	.3428
.025			.3740				
.040		.1523					
.045			.3614				
.050	.0660			.3820	.3539	.3341	.2619
.080				.2621			
.085			.2986				
.086		.2528					
.094	.0791						
.150				.0734	.0696	.0694	-.0170
.165		.0000					
.177			.1239				
.193		.2334					

ARC11-716 IA14 O1+T12+S12N25+AT10 UPPER WING (RB1U51)

ALPHAO(1) = -10.040 BETAO (7) = 1.810

SECTION (1)UPPER WING DEPENDENT VARIABLE CP

X/CW \ Y/BW	.2990	.3640	.4270	.5340	.6730	.7800	.8870
.229	.1621						
.250				-.0799	-.1159	-.1516	-.2568
.274			.0043				
.339		.0186					
.362	.1852						
.400				-.1478	-.2313		-.4113
.422			-.1177				
.497	.0000						
.550				-.1987	-.3019		
.565			.0000				
.600							-.2478
.650						-.2548	
.700	-.0468				-.1705		
.725				-.1628			
.750						.0535	.0156
.760			-.1784				
.774				.0280	.0321		
.808			.0118				
.834	-.1065						
.850				.0116	.0367	.0631	
.857			-.0019				
.865	.0060						
.900	-.0046			.0133			.0547
.905			-.0178		.0043		
.950				-.0208		.0256	
.953			-.0565				
.965	-.0805						

ALPHAO(1) = -10.130 BETAO (8) = 3.580

SECTION (1)UPPER WING DEPENDENT VARIABLE CP

X/CW \ Y/BW	.2990	.3640	.4270	.5340	.6730	.7800	.8870
.000	.0105	.0421	.1090	.0345	-.1807	-.3295	-.2941
.020				.4951	.2624	.3794	.3353
.025			.3621				
.040		.1431					
.045			.3467				
.050	.0612			.3799	.3421	.3127	.2373
.070				.2707			
.085			.2873				
.086		.2367					
.094	.0813						

ARC11-716 IA14 D1+T12+S12N25+AT10 UPPER WING (RB1U31)

ALPHAO(1) = -10.130 BETAO (8) = 3.580

SECTION (1)UPPER WING DEPENDENT VARIABLE CP

Y/BW	.2990	.3640	.4270	.5340	.6730	.7800	.8870
X/CW							
.150				.0847	.0735	.0622	-.0308
.163		.0000					
.177			.1284				
.193		.2183					
.229	.1530						
.250				-.0726	-.1105	-.1509	-.2693
.274			.0070				
.339		.0169					
.362	.1689						
.400				-.1500	-.2375		-.4343
.402			-.1192				
.497	.0000						
.550				-.2316	-.3320		
.565			.0000				
.600							-.5103
.650						-.3330	
.700	-.0797				-.1787		
.725				-.2042			
.750						.0458	.0354
.760			-.2186				
.775				.0020	.0188		
.808			-.0208				
.834	-.1408						
.850				-.0114	.0336	.0652	
.857			-.0384				
.865	-.0422						
.900	-.0376			-.0010			.0618
.905			-.0474		.0104		
.950				-.0380		.0436	
.953			-.0834				
.965	-.1163						

ALPHAO(1) = -10.130 BETAO (9) = 5.250

SECTION (1)UPPER WING DEPENDENT VARIABLE CP

Y/BW	.2990	.3640	.4270	.5340	.6730	.7800	.8870
X/CW							
.000	-.0223	.0188	.0911	.0166	-.2102	-.3711	-.3490
.020				.4832	.2355	.3556	.2756
.025			.3441				
.040		.1185					
.045			.3335				
.050	.0337			.3736	.3306	.2955	.2200

ARC11-716 IA14 O1+T12+S12N25+AT10 UPPER WING (RB1U31)

ALFMAD(1) = -10.130 BETAD (9) = 5.250

SECTION (1)UPPER WING DEPENDENT VARIABLE CP

Y/BW	.2990	.3640	.4270	.5340	.6730	.7800	.8870
X/CW							
.080				.2638			
.085			.2763				
.086		.2167					
.094	.0618						
.150				.0840	.0684	.0582	-.0375
.163		.0000					
.177			.1231				
.193		.2085					
.229	.1401						
.250				-.0714	-.1104	-.1515	-.2698
.274			.0110				
.339		.0156					
.362	.1525						
.400				-.1565	-.2429		-.4416
.402			-.1240				
.497	.0000						
.550				-.2511	-.3544		
.565			.0000				
.600							-.5511
.650						-.4770	
.700	-.1085				-.2014		
.725				-.2471			
.750						.0222	.0376
.760			-.2501				
.775				-.0223	-.0049		
.808			-.0618				
.834	-.1695						
.850				-.0258	.0209	.0567	
.857			-.0638				
.865	-.0847						
.900	-.0719			-.0208			.0593
.905			-.0630		.0073		
.950				-.0502		.0431	
.953			-.0974				
.965	-.1308						

ARC11-716 IA14 D1+T12+S12N25+AT10 UPPER WING (RB1U31)

ALPHAO(1) = -10.120 BETAO (10) = 7.010

SECTION (1)UPPER WING DEPENDENT VARIABLE CP

X/CW \ Y/BW	.2990	.3640	.4270	.5340	.6730	.7800	.8870
.000	-.0534	-.0051	.0677	-.0029	-.2584	-.4205	-.4010
.020				.4795	.2175	.3286	.2423
.025			.3349				
.040		.1917					
.045			.3297				
.050	.0043			.3773	.3268	.2847	.2019
.080				.2766			
.085			.2812				
.086		.2034					
.094	.0513						
.150				.0968	.0790	.0628	-.0408
.163		.0000					
.177			.1296				
.193		.2019					
.229	.1264						
.250				-.0570	-.0971	-.1399	-.2649
.274			.0177				
.339		.0133					
.362	.1341						
.400				-.1550	-.2368		-.4424
.402			-.1208				
.497	.0000						
.550				-.2630	-.3557		
.565			.0000				
.600							-.5723
.650						-.4898	
.700	-.1357				-.2215		
.725				-.3201			
.750						-.0823	-.0141
.760			-.2853				
.775				-.0764	-.0785		
.808			-.1045				
.834	-.2155						
.850				-.0475	-.0004	.0286	
.857			-.0893				
.865	-.1229						
.930	-.1011			-.0305			.0583
.909			- 0906		.0130		
.950				-.0594		.0425	
.953			-.1153				
.965	-.1462						

ARC11-716 IA14 O1+T12+S12N25+AT10 UPPER WING (RB1U31)

ALPHAO(1) = -10.130 BETAO (1) = 8.780

SECTION (1)UPPER WING DEPENDENT VARIABLE CP

Y/BW	.2990	.3640	.4270	.5340	.6730	.7800	.8870
X/CW							
.000	-.0943	-.0053	.0314	-.0274	-.2941	-.4593	-.4488
.020				.4687	.2012	.3008	.2120
.025			.3229				
.040		.0892					
.045			.3247				
.050	-.0091			.3813	.3220	.2724	.1841
.080				.2876			
.085			.2787				
.086		.1904					
.094	.0357						
.150				.1162	.0901	.0661	-.0427
.153		.0700					
.177			.1328				
.193		.1923					
.229	.1136						
.250				-.0382	-.0857	-.1345	-.2608
.274			.0220				
.339		-.0005					
.362	.1102						
.400				-.1489	-.2342		-.4404
.402			-.1232				
.497	.0000						
.550				-.2688	-.3582		
.565			.0000				
.600							-.5810
.650						-.4951	
.700	-.1638				-.2338		
.725				-.3443			
.750						-.1881	-.1030
.760			-.3200				
.775				-.1224	-.1350		
.800			-.1435				
.834	-.2527						
.850				-.0788	-.0331	-.0012	
.857			-.1195				
.865	-.1732						
.900	-.1369			-.0472			.0521
.905			-.1096		.0162		
.950				-.0551		.0358	
.955			-.1195				
.965	-.1469						

ARC11-716 IA14 O1+T12+S12N25+AT10 UPPER WING (RB1U31)

ALPHAO(2) = -6.110 BETAO (1) = -8.350

SECTION (1)UPPER WING DEPENDENT VARIABLE CP

X/CW \ Y/BW	.2990	.3640	.4270	.5340	.6730	.7800	.8870
.000	.0498	.0850	.3341	.3854	.2861	.1870	.2280
.020				.5335	.3974	.5228	.4877
.025			.4401				
.040		.2566					
.045			.3673				
.050	.1036			.3153	.3229	.3253	.2771
.080				.1463			
.085			.2241				
.086		.3209					
.094	.1144						
.150				-.0789	-.0618	-.0413	-.0793
.163		.0000					
.177			-.0095				
.193		.1842					
.229	.1923						
.250				-.2216	-.2501	-.2989	-.3578
.274			-.1235				
.339		-.0874					
.362	.1581						
.400				-.1586	-.2758		-.4679
.402			-.1429				
.497	.0000						
.550				-.0855	-.1729		
.555			.0000				
.600							-.1963
.650						-.1167	
.700	.0888				-.1417		
.725				-.0095			
.750						.1304	.0597
.760			-.0169				
.775				.1539	.1318		
.808			.1421				
.834	.0422						
.850				.1182	.1273	.1386	
.857			.1150				
.865	.1616						
.900	.1320			.1065			.1140
.905			.0897		.0810		
.950				.0515		.1072	
.953			.0352				
.965	.0102						

ARC11-716 IA14 O1+T12+S12N25+AT10 UPPER WING (RB1U31)

ALPHAO(2) = -8.120 BETAO (2) = -6.640

SECTION (1)UPPER WING DEPENDENT VARIABLE CP

Y/BW	.2990	.3640	.4270	.5340	.6730	.7800	.8870
X/CW							
.000	.0382	.0633	.3013	.5435	.2260	.1207	.1791
.020				.5255	.3764	.5028	.4655
.025			.4293				
.040		.2379					
.045			.3649				
.050	.0902			.3201	.3231	.3209	.2638
.080				.1547			
.085			.2325				
.086		.3083					
.094	.1036						
.150				-.0865	-.0522	-.0424	-.0886
.163		.0000					
.177			-.0002				
.193		.1867					
.229	.1833						
.250				-.2111	-.2442	-.2881	-.3600
.274			-.1122				
.339		-.0792					
.362	.1554						
.400				-.1733	-.2914		-.4798
.402			-.1454				
.497	.0000						
.550				-.1167	-.2155		
.565			.0000				
.600							-.2137
.650						-.1400	
.700	.0608				-.1414		
.725				-.0434			
.750						.1097	.0436
.760			-.0452				
.775				.1263	.1113		
.808			.1164				
.834	.0121						
.850				.0921	.1071	.1204	
.857			.0933				
.865	.1310						
.900	.1056			.0843			.1011
.905			.0702		.0651		
.950				.0344		.0869	
.953			.0180				
.965	-.0006						

ARC11-716 IA14 O1+T12+S12N25+AT10 UPPER WING (RB1U31)

ALPHAO(2) = -8.120 BETAO (3) = -4.940

SECTION (1)UPPER WING DEPENDENT VARIABLE CP

Y/BW	.2990	.3640	.4270	.5340	.6730	.7600	.8870
X/CW							
.000	.0267	.0486	.2704	.2990	.1844	.0704	.1235
.020				.5232	.3569	.4860	.4426
.025			.4145				
.040		.2200					
.045			.3652				
.050	.0806			.3259	.3255	.3148	.2579
.080				.1702			
.085			.2383				
.086		.2957					
.094	.0938						
.150				-.0511	-.0412	-.0280	-.0860
.163		.0000					
.177			.0150				
.193		.1895					
.229	.1758						
.250				-.1985	-.2340	-.2717	-.3569
.274			-.0988				
.339		-.0681					
.362	.1582						
.400				-.1775	-.2954		-.4811
.402			-.1549				
.497	.0000						
.550				-.1483	-.2506		
.565			.0000				
.600							-.2126
.650						-.1571	
.700	.0317				-.1409		
.725				-.0684			
.750						.0944	.0310
.760			-.0733				
.775				.1028	.0950		
.808			.0919				
.834	-.0195						
.850				.0739	.0918	.1093	
.857			.0701				
.865	.1020						
.900	.0814			.0667			.0690
.905			.0513		.0516		
.950				.0186		.0729	
.953			-.0004				
.965	-.0232						

DATE 10 JAN 75 TABULATED PRESSURE DATA - IA14A - VOL. 6

ARC11-716 IA14 O1+T12+S12N25+AT10 UPPER WING (RE1U31)

ALPHAO(2) = -8.130 BETAO (4) = -3.270

SECTION (1)UPPER WING DEPENDENT VARIABLE CP

Y/BW	.2990	.3640	.4270	.5340	.6730	.7800	.8870
X/CW							
.000	.0217	.0368	.2411	.2595	.1280	.0105	.0612
.020				.5092	.3387	.4652	.4187
.025			.4047				
.040		.2017					
.045			.3532				
.050	.0725			.3249	.3164	.3138	.2486
.080				.1753			
.085			.2381				
.086		.2829					
.094	.0842						
.150				-.0348	-.0269	-.0142	-.0846
.163		.0000					
.177			.0274				
.193		.1938					
.229	.1679						
.230				-.1813	-.2172	-.2530	-.3433
.274			-.0861				
.339		-.0572					
.362	.1595						
.400				-.1840	-.2956		-.4777
.402			-.1578				
.497	.0000						
.550				-.1733	-.2838		
.565			.0000				
.600							-.2072
.650						-.1712	
.700	.0088				-.1492		
.725				-.0923			
.750						.0810	.0263
.760			-.1018				
.775				.0842	.0775		
.808			.0692				
.834	-.0443						
.850				.0569	.0795	.0944	
.857			.0477				
.865	.0767						
.900	.0554			.0509			.0792
.905			.0309		.0389		
.950				.0045		.0637	
.953			-.0145				
.965	-.0395						

ARC11-716 IA14 OI+T12+S12N25+AT10 UPPER WING (RB1U31)

ALPHAO(2) = -9.130 BETAO (5) = -1.600

SECTION (1)UPPER WING DEPENDENT VARIABLE CP

Y/BW	.2990	.3640	.4270	.5340	.6730	.7800	.8870
X/CW							
.000	.0221	.0315	.2190	.2159	.0777	-.0444	.0116
.020				.4950	.3147	.4475	.3964
.025			.3869				
.040		.1862					
.045			.3412				
.050	.0659			.3244	.3142	.3094	.2380
.080				.1840			
.085			.2397				
.086		.2691					
.094	.0777						
.150				-.0245	-.0142	-.0060	-.0822
.163		.0000					
.177			.0411				
.193		.1912					
.229	.1592						
.250				-.1699	-.2024	-.2439	-.3351
.274			-.0727				
.339		-.0501					
.362	.1590						
.400				-.1898	-.2963		-.4743
.402			-.1623				
.497	.0000						
.550				-.1980	-.3086		
.565			.0000				
.600							-.1971
.650						-.1834	
.700	-.0230				-.1439		
.725				-.1114			
.750						.0747	.0206
.760			-.1337				
.775				.0638	.0660		
.808			.0441				
.834	-.0770						
.850				.0397	.0665	.0859	
.857			.0266				
.865	.0487						
.900	.0318			.0375			.0703
.905			.0085		.0207		
.950				.0003		.0520	
.953			-.0334				
.965	-.0576						

ARC11-716 IA14 O1+T12+S12N25+AT10 UPPER WING (RB1U31)

ALPHAO(2) = -8.130 BETAO (6) = .010

SECTION (1)UPPER WING DEPENDENT VARIABLE CP

Y/BW	.2990	.3640	.4270	.5340	.6730	.7800	.8870
X/CW							
.000	.0237	.0369	.1987	.1759	.0253	-.1099	-.0464
.020				.4826	.2881	.4222	.3676
.025			.3686				
.040		.1750					
.045			.3297				
.050	.0577			.3182	.3030	.2944	.2266
.080				.1890			
.085			.2408				
.086		.2581					
.094	.0724						
.150				-.0083	-.0126	-.0125	-.0865
.163		.0000					
.177			.0548				
.193		.1931					
.229	.1528						
.250				-.1610	-.2015	-.2397	-.3343
.274			-.0655				
.339		-.0405					
.362	.1583						
.400				-.1926	-.3020		-.4861
.402			-.1583				
.497	.0000						
.550				-.2235	-.3339		
.565			.0000				
.600							-.2054
.650						-.2074	
.700	-.0448				-.1526		
.725				-.1380			
.750						.0636	.0138
.760			-.1568				
.775				.0362	.0484		
.808			.0220				
.834	-.1086						
.850				.0191	.0523	.0736	
.857			.0090				
.865	.0207						
.900	.0192			.0240			.0589
.905			-.0046		.0251		
.950				-.0100		.0420	
.953			-.0443				
.965	-.0884						

DATE 10 JAN 75 TABULATED PRESSURE DATA - IA14A - VOL. 6

ARC11-716 IA14 O1+T12+S12N25+AT10 UPPER WING (RB1U31)

ALPHAO(2) = -8.120 BETAO (7) = 1.700

SECTION (1)UPPER WING DEPENDENT VARIABLE CP

Y/BW	.2990	.3640	.4270	.5340	.6730	.7800	.8870
X/CW							
.000	.0245	.0589	.1921	.1470	-.0163	-.1610	-.1030
.020				.4619	.2639	.3984	.3411
.025			.3471				
.040		.1666					
.045			.3125				
.050	.0544			.3104	.2934	.2797	.2137
.080				.1886			
.083			.2341				
.086		.2405					
.094	.0678						
.150				-.0065	-.0109	-.0091	-.0909
.163		.0000					
.177			.0568				
.193		.1834					
.229	.1452						
.250				-.1543	-.1930	-.2332	-.3347
.274			-.0521				
.339		-.0371					
.362	.1502						
.400				-.2009	-.3014		-.4921
.402			-.1652				
.497	.0000						
.550				-.2469	-.3650		
.565			.0000				
.600							-.3599
.650						-.2964	
.700	-.0727				-.1753		
.725				-.1722			
.750						.0586	.0253
.760			-.1834				
.775				.0168	.0322		
.808			-.0025				
.834	-.1332						
.850				.0031	.0403	.0643	
.857			-.0133				
.865	-.0151						
.900	-.0148			.0078			.0551
.905			-.0188		.0064		
.950				-.0252		.0313	
.953			-.0503				
.965	-.0064						

ARC11-716 IA14 O1+T12+S12N25+AT10 UPPER WING (RB1U31)

ALPHAO(2) = -0.110 BETAO (8) = 3.340

SECTION (1)UPPER WING DEPENDENT VARIABLE CP

Y/BW	.2990	.3640	.4270	.5340	.6730	.7800	.8870
X/CW							
.000	.0060	.0622	.1773	.1188	-.0668	-.2037	-.1554
.020				.4562	.2426	.3687	.3079
.025			.3388				
.040		.1525					
.045			.3056				
.050	.0430			.3148	.2857	.2637	.1888
.080				.1923			
.085			.2306				
.086		.2233					
.094	.0607						
.150				.0018	-.0025	-.0121	-.1041
.163		.0000					
.177			.0608				
.193		.1755					
.229	.1344						
.250				-.1510	-.1895	-.2273	-.3438
.274			-.0577				
.339		-.0338					
.362	.1391						
.400				-.2058	-.304[illegible]		-.5018
.402			-.1693				
.497	.0000						
.550				-.2716	-.3821		
.565			.0000				
.600							-.5448
.650						-.4532	
.700	-.1019				-.1670		
.725				-.2143			
.750						.0587	.0368
.760			-.2172				
.775				.0010	.0240		
.800			-.0302				
.834	-.1589						
.850				-.0045	.0357	.0671	
.857			-.0420				
.865	-.0543						
.900	-.0385			.0044			.0587
.905			-.0385		.0136		
.950				-.0185		.0321	
.953			-.0637				
.965	-.0840						

ARC11-716 IA14 O1+T12+J12N25+AT10 UPPER WING (RB1U31)

ALPHAO(2) = -8.090 BETAO (9) = 4.950

SECTION (1)UPPER WING DEPENDENT VARIABLE CP

Y/BW	.2990	.3640	.4270	.5340	.6730	.7800	.8870
X/CW							
.000	-.0452	.0383	.1549	.1093	-.0844	-.2347	-.1979
.020				.4457	.2287	.3497	.2849
.025			.3259				
.040		.1286					
.045			.2955				
.050	.0207			.3096	.2757	.2506	.1783
.060				.1879			
.065			.2251				
.086		.1989					
.094	.0530						
.150				.0039	-.0025	-.0094	-.1007
.163		.0000					
.177			.0590				
.193		.1650					
.229	.1221						
.250				-.1371	-.1809	-.2232	-.3385
.274			-.0496				
.339		-.0315					
.362	.1280						
.400				-.2010	-.2949		-.5025
.402			-.1685				
.497	.0000						
.550				-.2805	-.3869		
.565			.0000				
.600							-.5843
.650						-.5099	
.700	-.1296				-.2111		
.725				-.3246			
.750						-.0813	-.0283
.760			-.2945				
.775				-.0380	-.0448		
.808			-.0810				
.834	-.2027						
.850				-.0323	.0197	.0382	
.857			-.0643				
.865	-.1055						
.900	-.0885			-.0098			.0602
.905			-.0581		.0145		
.950				-.0348		.0274	
.953			-.0818				
.965	-.1187						

ARC11-716 IA14 O1+T12+S12N25+AT10 UPPER WING (RB1U31)

ALPHAO(2) = -8.0[illegible] [illegible]AO (10) = 6.750

SECTION (1)UPPER WING DEPENDENT VARIABLE CP

Y/BW	.2990	.3640	.4270	.5340	.6730	.7800	.8670
X/CW							
.000	-.0771	.0240	.1005	.0895	-.1313	-.2930	-.2590
.020				.4453	.2131	.3272	.2526
.025			.3135				
.040		.1008					
.045			.2909				
.050	-.0083			.3163	.2771	.2448	.1671
.080				.2031			
.085			.2269				
.086		.1923					
.094	.0325						
.150				.0235	.0083	-.0027	-.1008
.163		.0000					
.177			.0764				
.193		.1669					
.229	.1128						
.250				-.1225	-.1660	-.2127	-.3331
.274			-.0350				
.339		-.0222					
.362	.1202						
.400				-.2003	-.2896		-.5000
.402			-.1809				
.497	.0000						
.550				-.2907	-.3923		
.565			.0000				
.600							-.6046
.650						-.5253	
.700	-.1516				-.1840		
.725				-.3633			
.750						-.1609	-.1015
.760			-.3143				
.775				-.1267	-.1266		
.800			-.1191				
.834	-.2449						
.850				-.0573	-.0037	.0104	
.857			-.1014				
.865	-.1516						
.900	-.1202			-.0358			.0461
.905			-.0800		.0193		
.950				-.0385		.0434	
.953			-.0887				
.965	-.1331						

ARC11-716 IA14 O1+T12+S12N25+AT10 UPPER WING (RB1U31)

ALPHAO(2) = -8.090 BETAO (11) = 8.570

SECTION (1)UPPER WING DEPENDENT VARIABLE CP

Y/BW	.2995	.3640	.4270	.5340	.6730	.7800	.8670
X/CW							
.000	-.1036	.0193	.0558	.0613	-.1698	-.3333	-.3146
.020				.4362	.2017	.3062	.2240
.025			.2935				
.040		.0785					
.045			.2916				
.050	-.0162			.3209	.2758	.2340	.1490
.060				.2140			
.065			.2364				
.076		.1702					
.094	.0181						
.150				.0427	.0197	-.0002	-.1032
.163		.0000					
.177			.0828				
.193		.1647					
.229	.1082						
.250				-.1011	-.1546	-.2038	-.3295
.274			-.0256				
.339		-.0231					
.362	.1069						
.400				-.1937	-.2857		-.4988
.402			-.1597				
.497	.0000						
.550				-.2974	-.3957		
.565			.0000				
.600							-.6177
.650						-.5346	
.700	-.1093				-.2383		
.725				-.3751			
.750						-.2272	-.1333
.760			-.3304				
.775				-.1716	-.1648		
.808			-.1614				
.834	-.2553						
.850				-.0872	-.0346	-.0032	
.857			-.1327				
.865	-.1915						
.900	-.1571			-.0440			.0515
.905			-.1019		.0155		
.950				-.0478		.0453	
.953			-.1076				
.965	-.1506						

ARC11-716 IA14 O1+T12+S12N25+AT10 UPPER WING (RB1U31)

ALPHAO(3) = -8.100 BETAO (1) = -8.140

SECTION (1)UPPER WING DEPENDENT VARIABLE CP

Y/BW	.2990	.3640	.4270	.5340	.6730	.7800	.8870
X/CW							
.000	.0716	.1418	.4005	.4669	.3840	.3014	.3305
.020				.4626	.4063	.4427	.4221
.025			.3992				
.040		.2632					
.045			.3019				
.050	.0910			.2194	.2107	.2150	.1657
.080				.0311			
.085			.1420				
.086		.2978					
.094	.0994						
.150				-.1921	-.1855	-.1696	-.2010
.163		.0000					
.177			-.0980				
.193		.1221					
.229	.1695						
.250				-.3409	-.3852	-.4376	-.4753
.274			-.2050				
.339		-.1750					
.362	.1123						
.400				-.2209	-.3684		-.6121
.402			-.2030				
.497	.0000						
.550				-.1192	-.2095		
.565			.0000				
.600							-.1806
.650						-.1102	
.700	.0561				-.1412		
.725				-.0162			
.750						.1271	.0428
.760			-.0147				
.775				.1475	.1283		
.808			.1393				
.834	.0323						
.857				.1121	.1266	.1347	
.857			.1149				
.865	.1563						
.900	.1321			.1047			.1153
.901			.0884		.0799		
.950				.0552		.1035	
.953			.0382				
[illegible]	.0234						

ARC11-716 IA14 O1+T12+S12N25+AT10 UPPER WING (RB1U51)

ALPHAO(3) = -6.110 BETAO (2) = -6.480

SECTION (1)UPPER WING DEPENDENT VARIABLE CP

Y/BW	.2990	.3640	.4270	.5340	.6730	.7800	.8870
X/CW							
.000	.0588	.1209	.3732	.4332	.3383	.2517	.2056
.020				.4579	.3956	.4327	.4034
.025			.3897				
.040		.2467					
.045			.3016				
.050	.0815			.2276	.2201	.2154	.1610
.080				.0506			
.085			.1509				
.086		.2867					
.094	.0095						
.150				-.1741	-.1715	-.1590	-.1982
.163		.0000					
.177			-.0866				
.193		.1207					
.229	.1613						
.251				-.3221	-.3632	-.4156	-.4667
.274			-.1925				
.339		-.1629					
.362	.1142						
.400				-.2335	-.3727		-.6068
.402			-.2149				
.497	.0000						
.550				-.1586	-.2617		
.565			.0000				
.600							-.1664
.650						-.1199	
.700	.0266				-.1420		
.725				-.0423			
.750						.1149	.0383
.760			-.0467				
.775				.1301	.1154		
.808			.1174				
.834	.0015						
.850				.0973	.1159	.1260	
.857			.0926				
.865	.1269						
.900	.1053			.0888			.1075
.905			.0603		.0709		
.950				.0422		.0978	
.953			.0201				
.965	.0015						

ARC11-716 IA14 O1+T12+S12N25+AT10 UPPER WING (RB1U31)

ALPHAO(3) = -6.130 BETAO (3) = -4.820

SECTION (1)UPPER WING DEPENDENT VARIABLE CP

Y/BW	.2990	.3640	.4270	.5340	.6730	.7800	.8670
X/CW							
.000	.0459	.1037	.3395	.3867	.2903	.1978	.2332
.020				.4598	.3695	.4211	.3872
.025			.3821				
.040		.2321					
.045			.3063				
.050	.0678			.2369	.2232	.2149	.1587
.080				.0615			
.085			.1650				
.086		.2782					
.094	.0804						
.150				-.1599	-.1571	-.1494	-.1934
.163		.0000					
.177			-.0728				
.193		.1346					
.229	.1564						
.250				-.2981	-.3361	-.4015	-.4609
.274			-.1770				
.339		-.1395					
.362	.1137						
.400				-.2384	-.3834		-.5920
.402			-.2214				
.497	.0000						
.550				-.1847	-.3118		
.565			.0000				
.600							-.1625
.650						-.1349	
.700	.0030				-.1405		
.725				-.0651			
.750						.1013	.0268
.760			-.0741				
.775				.1051	.0980		
.800			.0902				
.834	-.0236						
.850				.0727	.1015	.1134	
.857			.0730				
.865	.0970						
.900	.0841			.0690			.0972
.905			.0522		.0594		
.950				.0249		.0881	
.953			.0061				
.965	-.0151						

ARC11-716 IA14 O1+T12+S12N25+AT10 UPPER WING (RB1U31)

ALPHAO(3) = -6.140 BETAO (4) = -3.220

SECTION (1)UPPER WING DEPENDENT VARIABLE CP

X/CW \ Y/BW	.2990	.3640	.4270	.5340	.6730	.7800	.8870
.000	.0405	.0922	.3167	.3526	.2418	.1461	.1895
.020				.4526	.3502	.4120	.3737
.025			.3734				
.040		.2138					
.045			.3041				
.050	.0623			.2383	.2302	.2192	.1572
.080				.0768			
.085			.1669				
.086		.2686					
.094	.0707						
.150				-.1347	-.1349	-.1292	-.1896
.163		.0000					
.177			-.0533				
.193		.1393					
.229	.1489						
.250				-.2780	-.3151	-.3739	-.4506
.274			-.1642				
.339		-.1321					
.362	.1155						
.400				-.2424	-.3848		-.5859
.402			-.2233				
.497	.0000						
.550				-.2185	-.3586		
.565			.0000				
.600							-.1263
.650						-.1469	
.700	-.0246				-.1481		
.725				-.0953			
.750						.0975	.0306
.760			-.1005				
.775				.0827	.0869		
.808			.0680				
.834	-.0602						
.850				.0577	.0847	.1032	
.857			.0471				
.865	.0603						
.900	.0504			.0547			.0910
.905			.0323		.0386		
.950				.0110		.0661	
.953			-.0135				
.965	-.0375						

DATE 10 JAN 75 TABULATED PRESSURE DATA - IA14A - VOL. 6

ARC11-716 IA14 O1+T12+S12N25+AT10 UPPER WING (RB1U31)

ALPHAO(S) = -6.030 BETAO (S) = -1.620

SECTION (1)UPPER WING DEPENDENT VARIABLE CP

Y/BW	.2990	.3640	.4270	.5340	.6730	.7800	.8870
X/CW							
.000	.0349	.0832	.2913	.3117	.1899	.0958	.1460
.020				.4447	.3154	.3976	.3527
.025			.3577				
.040		.1995					
.045			.2950				
.050	.0562			.2408	.2299	.2174	.1465
.080				.0888			
.085			.1758				
.086		.2545					
.094	.0647						
.150				-.1196	-.1218	-.1170	-.1881
.163		.0000					
.177			-.0417				
.193		.1394					
.229	.1335						
.250				-.2635	-.2999	-.3495	-.4437
.274			-.1472				
.339		-.1195					
.362	.1185						
.400				-.2501	-.3809		-.5838
.402			-.2210				
.497	.0000						
.550				-.2444	-.3746		
.565			.0000				
.600							-.1385
.650						-.1668	
.700	-.0530				-.1433		
.725				-.1227			
.750						.0903	.0330
.760			-.1309				
.775				.0626	.0740		
.800			.0425				
.834	-.0853						
.850				.0470	.0707	.0962	
.857			.0263				
.865	.0387						
.900	.0316			.0440			.0911
.905			.0128		.0321		
.950				.0090		.0552	
.953			-.0252				
.965	-.0910						

ARC11-716 IA14 O1+T12+S12N25+AT10 UPPER WING (RB1U31)

ALPHAO(3) = -6.030 BETAO (6) = .000

SECTION (1)UPPER WING DEPENDENT VARIABLE CP

Y/BW	.2990	.3640	.4270	.5340	.6730	.7800	.8870
X/CW							
.000	.0286	.0841	.2756	.2807	.1446	.0445	.1023
.020				.4275	.2860	.3767	.3315
.025			.3418				
.040		.1845					
.045			.2820				
.050	.0464			.2367	.2196	.2100	.1390
.080				.0878			
.085			.1661				
.086		.2409					
.094	.0968						
.150				-.1096	-.1187	-.1140	-.1908
.163		.0000					
.177			-.0300				
.193		.1344					
.229	.1333						
.250				-.2521	-.2913	-.3443	-.4380
.274			-.1456				
.339		-.1176					
.362	.1130						
.400				-.2534	-.3902		-.5798
.402			-.2249				
.497	.0000						
.550				-.2716	-.4047		
.565			.0000				
.600							-.5172
.650						-.3545	
.700	-.0857				-.1664		
.725				-.1675			
.750						.0916	.0594
.760			-.1670				
.775				.0337	.0572		
.806			.0146				
.834	-.1276						
.850				.0210	.0622	.0902	
.857			.0025				
.865	.0005						
.900	-.0012			.0220			.0800
.905			-.0032		.0215		
.950				-.0132		.0497	
.955			-.0403				
.965	-.0705						

ARC11-716 IA14 OI+T12+S12N25+AT10 UPPER WING (RB1U31)

ALPHAO(3) = -6.030 BETAO (7) = 1.640

SECTION (1)UPPER WING DEPENDENT VARIABLE CP

Y/BW	.2990	.3640	.4270	.5340	.6730	.7800	.8870
X/CW							
.000	.0105	.0820	.2592	.2436	.1085	-.0047	.0493
.020				.4056	.2567	.3593	.3141
.025			.3167				
.040		.1682					
.045			.2629				
.050	.0343			.2233	.2111	.2028	.1329
.080				.0866			
.085			.1555				
.086		.2237					
.094	.0474						
.150				-.1092	-.1095	-.1066	-.1815
.163		.0000					
.177			-.0332				
.193		.1261					
.229	.1237						
.250				-.2418	-.2796	-.3325	-.4199
.274			-.1390				
.339		-.1076					
.362	.1068						
.400				-.2519	-.3889		-.5733
.402			-.2299				
.497	.0000						
.550				-.2906	-.4134		
.565			.0000				
.600							-.5733
.650						-.5257	
.700	-.1101				-.1902		
.725				-.2512			
.750						.0679	.0241
.760			-.2217				
.775				.0058	.0425		
.808			-.0228				
.834	-.1621						
.850				-.0016	.0475	.0010	
.857			-.0204				
.865	-.0376						
.900	-.0346			.0001			.0723
.905			-.0180		.0135		
.950				-.0174		.0338	
.953			-.0448				
.965	-.0843						

ARC11-716 IA14 O1+T12+S12N25+AT10 UPPER WING (RB1U31)

ALPHAO(3) = -6.180 BETAO (8) = 3.330

SECTION (1)UPPER WING DEPENDENT VARIABLE CP

Y/BW	.2990	.3640	.4270	.5340	.6730	.7800	.8870
X/CW							
.000	-.0113	.0759	.2397	.2126	.0975	-.0568	-.0004
.020				.3988	.2312	.3406	.2849
.025			.3051				
.040		.1525					
.045			.2573				
.050	.0293			.2324	.2122	.1961	.1223
.080				.1032			
.065			.1635				
.086		.2045					
.094	.0482						
.150				-.0812	-.0938	-.1008	-.1848
.163		.0000					
.177			-.0163				
.193		.1280					
.229	.1179						
.250				-.2257	-.2661	-.3111	-.4123
.274			-.1187				
.339		-.0967					
.362	.1033						
.400				-.2486	-.3830		-.5686
.402			-.2207				
.497	.0000						
.550				-.3002	-.4209		
.565			.0000				
.600							-.5931
.650						-.5363	
.700	-.1318				-.2125		
.725				-.3543			
.750						-.0598	-.0057
.760			-.2862				
.775				-.0597	-.0344		
.808			-.0630				
.834	-.2150						
.850				-.0112	.0210	.0415	
.857			-.0404				
.865	-.0986						
.900	-.0748			-.0067			.0542
.905			-.0406		.0037		
.950				-.0302		.0191	
.953			-.0623				
.965	-.0983						

ARC11-716 IA14 OI+T12+S12N25+AT10 UPPER WING (RB1U31)

ALPHAO(3) = -6.160 BETAO (9) = 5.010

SECTION (1)UPPER WING DEPENDENT VARIABLE CP

Y/BW	.2990	.3640	.4270	.5340	.6730	.7800	.8870
X/CW							
.000	-.0490	.0518	.1895	.2052	.0308	-.0973	-.0498
.020				.3979	.2105	.3204	.2657
.025			.2964				
.040		.1222					
.045			.2563				
.050	.0324			.2349	.2043	.1851	.1142
.080				.1046			
.085			.1672				
.086		.1875					
.094	.0362						
.150				-.0769	-.0910	-.0943	-.1782
.163		.0000					
.177			-.0029				
.193		.1274					
.229	.1064						
.250				-.2152	-.2561	-.3020	-.4056
.274			-.1045				
.339		-.0856					
.362	.0987						
.400				-.2512	-.3832		-.5663
.402			-.2173				
.497	.0000						
.550				-.3150	-.4272		
.565			.0000				
.600							-.6066
.650						-.5463	
.700	-.1519				-.2078		
.725				-.3598			
.750						-.0993	-.0352
.760			-.3029				
.775				-.0872	-.0947		
.808			-.1120				
.834	-.2434						
.850				-.0283	-.0115	.0207	
.857			-.0754				
.865	-.1527						
.900	-.1115			-.0121			.0611
.905			-.0642		-.0050		
.950				-.0332		.0093	
.953			-.0749				
.965	-.1190						

ARC11-716 IA14 O1+T12+S12N25+AT10 UPPER WING (RB1U31)

ALPHAO(3) = -6.140 BETAO (10) = 6.740

SECTION (1)UPPER WING DEPENDENT VARIABLE CP

Y/BW	.2990	.3540	.4270	.5340	.6750	.7800	.8870
X/CW							
.000	-.1008	.0370	.1135	.1856	-.0061	-.1525	-.1051
.020				.3926	.2074	.3073	.2440
.025			.2675				
.040		.0893					
.045			.2455				
.050	-.0283			.2462	.2113	.1897	.1124
.080				.1229			
.085			.1741				
.086		.1595					
.094	.0140						
.150				-.0572	-.0659	-.0814	-.1714
.163		.0000					
.177			.0111				
.193		.1335					
.229	.0964						
.250				-.1847	-.2381	-.2822	-.3909
.274			-.0968				
.339		-.0696					
.362	.0944						
.400				-.2420	-.3789		-.5586
.402			-.2093				
.497	.0000						
.550				-.3204	-.4267		
.565			.0000				
.600							-.6276
.650						-.5556	
.700	-.1666				-.2353		
.725				-.3849			
.750						-.3096	-.2034
.760			-.3250				
.775				-.2547	-.2510		
.808			-.1831				
.834	-.2580						
.850				-.1069	-.0691	-.0521	
.857			-.1180				
.865	-.1915						
.900	-.1483			-.0540			.0015
.905			-.0906		-.0079		
.950				-.0597		-.0009	
.953			-.0901				
.965	-.1346						

ARC11-716 IA14 O1+T12+S12N25+AT10 UPPER WING (RB1U31)

ALPHAO(3) = -6.140 BETAO (11) = 8.500

SECTION (1)UPPER WING DEPENDENT VARIABLE CP

Y/BW	.2990	.3640	.4270	.5340	.6730	.7800	.8870
X/CW							
.000	-.1515	.0263	.0854	.1340	-.0411	-.1965	-.1555
.020				.3833	.1936	.2891	.2226
.025			.2393				
.040		.0720					
.045			.2247				
.050	-.0512			.2541	.2136	.1830	.1018
.080				.1414			
.085			.1778				
.086		.1407					
.094	.0014						
.150				-.0331	-.0528	-.0716	-.1660
.163		.0000					
.177			.0276				
.193		.1301					
.229	.0866						
.250				-.1591	-.2167	-.2719	-.3785
.274			-.0738				
.339		-.0541					
.362	.0846						
.400				-.2334	-.3723		-.5519
.402			-.1958				
.497	.0000						
.550				-.3242	-.4273		
.565			.0000				
.600							-.6341
.650						-.5573	
.700	-.1873				-.2381		
.725				-.3932			
.750						-.3079	-.1979
.760			-.3368				
.775				-.2534	-.2894		
.800			-.2278				
.834	-.2835						
.850				-.1213	-.0847	-.0582	
.857			-.1592				
.865	-.2329						
.900	-.1960			-.0658			.0165
.905			-.1258		-.0056		
.950				-.0584		.0092	
.953			-.1189				
.965	-.1616						

ARC11-716 IA14 O1+T12+S12N25+AT10 UPPER WING (RB1U31)

ALPHAO(4) = -4.170 BETAO (1) = -9.980

SECTION (1)UPPER WING DEPENDENT VARIABLE CP

Y/BW	.2990	.3640	.4270	.5340	.6730	.7800	.8870
X/CW							
.000	.0985	.1917	.4713	.5774	.5293	.4704	.4834
.020				.3714	.3736	.3458	.3324
.025			.3472				
.040		.2710					
.045			.2313				
.050	.0874			.0991	.0832	.0834	.0295
.080				-.1069			
.085			.0439				
.086		.2756					
.094	.0919						
.150				-.3442	-.3533	-.3264	-.3229
.163		.0000					
.177			-.2232				
.193		.0558					
.229	.1576						
.250				-.4698	-.5532	-.5868	-.5844
.274			-.3212				
.339		-.2625					
.362	.0696						
.400				-.2584	-.4080		-.8245
.402			-.2799				
.497	.0000						
.550				-.1090	-.1844		
.565			.0000				
.600							-.0897
.650						-.0706	
.700	.0805				-.1349		
.725				.0134			
.750						.1409	.0526
.760			.0149				
.775				.1641	.1472		
.808			.1601				
.834	.0595						
.850				.1315	.1430	.1458	
.857			.1348				
.865	.1804						
.900	.1569			.1199			.1183
.905			.1081		.0891		
.950				.0705		.1095	
.953			.0591				
.965	.0421						

ARC11-716 IA14 O1+T12+S12N25+AT10 UPPER WING (RB1U31)

ALPHAO(4) = -4.190 BETAO (2) = -7.970

SECTION (1)UPPER WING DEPENDENT VARIABLE CP

Y/BW	.2990	.3640	.4270	.5340	.6730	.7800	.8870
X/CW							
.000	.0795	.1721	.4464	.5451	.4845	.4154	.4375
.020				.3745	.3943	.3451	.3220
.025			.3445				
.040		.2567					
.045			.2314				
.050	.0726			.1127	.0917	.0867	.0327
.080				-.0916			
.085			.0547				
.086		.2683					
.094	.0804						
.150				-.3216	-.3306	-.3169	-.3181
.163		.0000					
.177			-.2060				
.193		.0618					
.229	.1494						
.250				-.4571	-.5382	-.5706	-.5802
.274			-.2999				
.339		-.2552					
.362	.0693						
.400				-.2738	-.4275		-.8188
.402			-.2857				
.497	.0000						
.550				-.1535	-.2494		
.565			.0000				
.600							-.0793
.650						-.0828	
.700	.0322				-.1347		
.725				-.0164			
.750						.1311	.0476
.760			-.0146				
.775				.1398	.1314		
.808			.1324				
.834	.0305						
.850				.1125	.1257	.1340	
.857			.1114				
.865	.1514						
.900	.1316			.1028			.1104
.905			.0869		.0776		
.930				.0564		.0909	
.953			.0404				
.965	.0230						

ARC11-716 IA14 O1+T12+S12N25+AT10 UPPER WING (RB1U31)

ALPHAO(4) = -4.210 BETAO (3) = -5.970

SECTION (1)UPPER WING DEPENDENT VARIABLE CP

Y/BW	.2990	.3640	.4270	.5340	.6730	.7800	.8870
X/CW							
.000	.0628	.1513	.4129	.4987	.4294	.3569	.3839
.020				.3758	.3995	.3345	.3096
.025			.3369				
.040		.2390					
.045			.2301				
.050	.0613			.1243	.1013	.0943	.0321
.080				-.0594			
.085			.0679				
.086		.2590					
.094	.0674						
.150				-.2910	-.2961	-.3009	-.3173
.163		.0000					
.177			-.1833				
.193		.0686					
.229	.1409						
.250				-.4297	-.5029	-.5542	-.5740
.274			-.2868				
.339		-.2368					
.362	.0703						
.400				-.2924	-.4517		-.7843
.402			-.3014				
.497	.0000						
.550				-.2073	-.3519		
.565			.0000				
.600							-.0891
.650						-.0983	
.700	-.0027				-.1371		
.725				-.0473			
.750						.1217	.0460
.760			-.0470				
.771				.1187	.1146		
.808			.1057				
.834	-.0097						
.850				.0904	.1097	.1229	
.857			.0837				
.865	.1117						
.900	.0988			.0802			.0982
.905			.0657		.0622		
.950				.0398		.0819	
.953			.0197				
.965	-.0032						

ARC11-716 IA14 01+T12+S12N25+AT10 UPPER WING (RB1U31)

ALPHAO(4) = -4.190 BETAO (4) = -3.980

SECTION (1)UPPER WING DEPENDENT VARIABLE CP

Y/BW	.2990	.3640	.4270	.5340	.6730	.7800	.8870
X/CW							
.000	.0518	.1331	.3854	.4597	.3733	.2982	.3247
.020				.3783	.3899	.3269	.2952
.025			.3353				
.040		.2232					
.045			.2546				
.050	.0535			.1361	.1080	.0950	.0298
.080				-.0389			
.085			.0816				
.086		.2506					
.094	.0588						
.150				-.2580	-.2833	-.2799	-.3166
.163		.0000					
.177			-.1592				
.193		.0763					
.229	.1328						
.250				-.4086	-.4713	-.5199	-.5655
.274			-.2597				
.339		-.2226					
.362	.0744						
.400				-.2978	-.4773		-.7367
.402			-.3047				
.497	.0000						
.550				-.2494	-.3906		
.565			.0000				
.600							-.1154
.650						-.1162	
.700	-.0478				-.1384		
.725				-.0441			
.750						.1126	.0457
.760			-.0835				
.775				.0883	.0949		
.800			.0777				
.833	-.0551						
.850				.0686	.0939	.1104	
.857			.0582				
.865	.0712						
.900	.0628			.0679			.0967
.905			.0412		.0486		
.950				.0268		.0695	
.953			-.0020				
.965	-.0252						

ARC11-716 IA14 Q1+T12+S12N25+AT10 UPPER WING (RB1U31)

ALPHAO(4) = -4.180 BETAO (5) = -1.980

SECTION (1)UPPER WING DEPENDENT VARIABLE CP

Y/BW	.2990	.3640	.4270	.5340	.6730	.7800	.8870
X/CW							
.000	.0403	.1178	.3564	.4095	.3199	.2378	.2728
.020				.3757	.3808	.3252	.2893
.025			.3243				
.040		.2051					
.045			.2353				
.050	.0443			.1474	.1261	.1091	.0430
.080				-.0204			
.085			.0970				
.086		.2387					
.094	.0508						
.150				-.2276	-.2497	-.2551	-.2991
.163		.0500					
.177			-.1341				
.193		.0232					
.229	.1266						
.250				-.3745	-.4337	-.4924	-.5447
.274			-.2372				
.339		-.1961					
.362	.0773						
.400				-.3036	-.4676		-.6864
.402			-.2981				
.497	.0000						
.550				-.2800	-.4354		
.565			.0000				
.600							-.4983
.650						-.2844	
.700	-.0791				-.1418		
.725				-.1204			
.750						.1256	.0789
.760			-.1276				
.775				.0647	.0899		
.808			.0439				
.834	-.0998						
.850				.0498	.0857	.1141	
.857			.0318				
.865	.0248						
.900	.0260			.0449			.0954
.905			.0209		.0317		
.950				.0117		.0618	
.953			-.0164				
.965	-.0469						

ARC11-716 IA14 O1+T12+S12N25+AT10 UPPER WING (RB1U31)

ALPHAO(4) = -4.100 BETAO (6) = .030

SECTION (1)UPPER WING DEPENDENT VARIABLE CP

Y/BW	.2990	.3640	.4270	.5340	.6730	.7800	.8870
X/CW							
.000	.0225	.1033	.3263	.3600	.2541	.1673	.2099
.020				.3590	.3543	.3124	.2757
.025			.3031				
.040		.1871					
.045			.2232				
.050	.0296			.1469	.1289	.1094	.0442
.080				-.0085			
.085			.0934				
.086		.2203					
.[illegible]4	.0424						
.150				-.2083	-.2259	-.2299	-.2908
.163		.0000					
.177			-.1173				
.193		.0831					
.229	.1169						
.250				-.3418	-.4069	-.4544	-.5269
.274			-.2171				
.339		-.1862					
.362	.0742						
.400				-.2989	-.4715		-.6627
.402			-.2934				
.497	.0000						
.550				-.4053	-.4511		
.565			.0000				
.600							-.5955
.650						-.5299	
.700	-.1109				-.1737		
.725				-.2033			
.750						.1087	.0680
.760			-.1887				
.775				.0299	.0669		
.808			.0018				
.834	-.1387						
.850				.0235	.0682	.1030	
.857			.0049				
.865	-.0256						
.900	-.0149			.0255			.0032
.905			-.0040		.0226		
.950				-.0052		.0437	
.953			-.0355				
.965	-.0735						

ARC11-716 IA14 01+T12+S12N25+AT10 UPPER WING (RB1U31)

ALPHA0(4) = -4.170 BETA0 (7) = 2.020

SECTION (1)UPPER WING DEPENDENT VARIABLE CP

Y/BW	.2990	.3640	.4270	.5340	.6730	.7800	.8870
X/CW							
.000	.0041	.0940	.3044	.3336	.2144	.1135	.1560
.020				.3386	.3262	.2919	.2545
.025			.2752				
.040		.1653					
.045			.2045				
.050	.0200			.1339	.1193	.1053	.0364
.080				-.0054			
.085			.0858				
.086		.2006					
.094	.0365						
.150				-.1982	-.2141	-.2142	-.2900
.163		.0000					
.177			-.1141				
.193		.0746					
.220	.1083						
.250				-.3281	-.3836	-.4274	-.5243
.274			-.2083				
.339		-.1733					
.362	.0691						
.400				-.5023	-.4705		-.6541
.402			-.2896				
.497	.0000						
.550				-.3209	-.4618		
.565			.0000				
.600							-.6141
.650						-.5635	
.700	-.1377				-.2173		
.725				-.3744			
.750						-.0386	-.0115
.760			-.2559				
.775				-.0406	-.0102		
.808			-.0446				
.834	-.2110						
.850				-.0034	.0397	.0658	
.857			-.0252				
.865	-.0884						
.900	-.0596			.0033			.0746
.905			-.0227		.0031		
.950				-.0190		.0335	
.953			-.0515				
.965	-.0919						

ARC11-716 IA14 01+712+812N25+AT10 UPPER WING (R01U31)

ALPHAO(4) = -4.240 BETAO (8) = 4.040

SECTION (5)UPPER WING DEPENDENT VARIABLE CP

Y/B	.2990	.3640	.4270	.5340	.6750	.7800	.8670
X/CW							
.000	-.0499	.0757	.2375	.3045	.1646	.0662	.1023
.020				.3772	.2950	.2714	.2276
.025			.2595				
.040		.1302					
.045			.2059				
.050	.0502			.1469	.1201	.0961	.0240
.080				.0103			
.085			.1012				
.087		.1760					
.094	.0305						
.150				-.1701	-.1942	-.2008	-.2074
.163		.0000					
.177			-.0802				
.193		.0854					
.229	.0983						
.250				-.2904	-.3517	-.4088	-.5148
.274			-.1793				
.339		-.1476					
.342	.0685						
.400				-.2954	-.4612		-.6307
.402			-.2701				
.497	.0000						
.550				-.3354	-.4692		
.583			0000				
.600							-.0260
.650						-.5786	
.700	-.1611				-.2377		
.725				-.38:9			
.750						-.1677	-.0882
.760			-.3222				
.775				-.1638	-.1430		
.808			-.1544				
.834	-.2770						
.850				-.0532	-.0096	-.0014	
.857			-.0868				
.865	-.1831						
.900	-.1351			-.0308			.0498
.905			-.0711		.0040		
.950				-.0467		.0200	
.953			-.0983				
.965	-.1446						

ARC11-716 IA14 D1+T12+S12N25+AT10 UPPER WING (RB1U31)

ALPHAD(4) = -4.230 BETAD (9) = 6.050

SECTION (1)UPPER WING DEPENDENT VARIABLE CP

Y/BW	.2990	.3440	.4270	.5340	.6730	.7800	.8870
X/CW							
.000	-.1025	.0529	.1556	.3000	.1304	.0071	.0400
.020				.3244	.2662	.2643	.2147
.025			.2113				
.040		.0921					
.045			.1867				
.050	-.0328			.1562	.1279	.1054	.0325
.080				.0259			
.085			.1120				
.086		.1391					
.094	.0019						
.150				-.1405	-.1695	-.1764	-.2659
.163		.0000					
.177			-.0504				
.193		.0890					
.229	.0870						
.250				-.2675	-.3239	-.3807	-.4814
.274			-.1536				
.339		-.1181					
.362	.0652						
.400				-.2876	-.4508		-.6150
.402			-.2454				
.497	.0000						
.550				-.3413	-.4688		
.565			.0000				
.600							-.6302
.650						-.5881	
.700	-.1784				-.2438		
.725				-.3934			
.750						-.2598	-.1746
.760			-.3175				
.775				-.2885	-.2493		
.808			-.2260				
.834	-.2219						
.850				-.1099	-.0742	-.0549	
.857			-.1564				
.865	-.2411						
.900	-.1928			-.0710			.0083
.905			-.1172		.0016		
.950				-.0757		-.0005	
.953			-.1333				
.965	-.1702						

ARC11-716 IA14 O1+T12+S12N25+AT10 UPPER WING (RB1U31)

ALPHAO(4) = -4.200 BETAO (10) = 8.070

SECTION (1)UPPER WING DEPENDENT VARIABLE CP

Y/BW	.2990	.3640	.4270	.5340	.6730	.7800	.8870
X/CW							
.000	-.1449	.0348	.1200	.2151	.0926	-.0465	-.0150
.020				.2983	.2337	.2532	.1961
.025			.1883				
.040		.0675					
.045			.1704				
.050	-.0487			.1585	.1378	.1078	.0265
.080				.0539			
.085			.1119				
.086		.1176					
.094	-.0131						
.150				-.1112	-.1460	-.1626	-.2564
.163		.0000					
.177			-.0281				
.193		.0861					
.229	.0714						
.250				-.2332	-.2975	-.3545	-.4645
.274			-.1315				
.339		-.1043					
.362	.0604						
.400				-.2789	-.4432		-.6080
.402			-.2351				
.497	.0000						
.500				-.3509	-.4732		
.565			.0000				
.600							-.6538
.650						-.5987	
.700	-.2040				-.2532		
.725				-.4011			
.750						-.2914	-.1616
.760			-.3177				
.775				-.3149	-.2865		
.808			-.2488				
.834	-.2968						
.850				-.1468	-.0933	-.0632	
.857			-.1879				
.865	-.2653						
.900	-.2213			-.0961			.0047
.905			-.1412		-.0072		
.950				-.0837		.0099	
.953			-.1447				
.965	-.1813						

ARC11-716 IA14 D1+T12+S12N25+AT10 UPPER WING (RB1U31)

ALPHAO(4) = -4.200 BETAO (11) = 10.080

SECTION (1)UPPER WING DEPENDENT VARIABLE CP

X/CW \ Y/BW	.2990	.3640	.4270	.5340	.5730	.7800	.8870
.000	-.2086	.0274	.0980	.1363	.0663	-.0855	-.0713
.020				.2865	.2087	.2458	.1820
.025			.1668				
.040		.0599					
.045			.1560				
.050	-.0885			.1703	.1470	.1162	.0365
.080				.0786			
.085			.1067				
.086		.1084					
.094	-.0229						
.150				-.0818	-.1226	-.1383	-.2367
.163		.0000					
.177			-.0161				
.193		.0797					
.229	.0628						
.250				-.2060	-.2736	-.3326	-.4445
.274			-.1125				
.339		-.0979					
.362	.0519						
.400				-.2711	-.4319		-.5917
.402			-.2223				
.497	.0000						
.550				-.3548	-.4706		
.565			.0000				
.600							-.6619
.650						-.5959	
.700	-.2200				-.2576		
.725				-.4169			
.750						-.3755	-.2493
.760			-.3518				
.775				-.3461	-.3910		
.808			-.2898				
.834	-.3123						
.850				-.1894	-.1226	-.1033	
.857			-.1968				
.865	-.2926						
.900	-.2517			-.1139			-.0361
.905			-.1572		-.0244		
.950				-.0680		.0053	
.953			-.1376				
.965	-.1939						

ARC11-716 IA14 O1+T12+S12N25+AT10 UPPER WING (RB1U31)

ALPHAO(9) = -2.870 BETAO (1) = -9.990

SECTION (1)UPPER WING DEPENDENT VARIABLE CP

Y/BW	.2990	.3640	.4270	.5340	.6730	.7800	.8870
X/CW							
.000	.0976	.2030	.4927	.6170	.5836	.5338	.5400
.020				.3027	.4097	.2575	.2360
.025			.2966				
.040		.2618					
.045			.1733				
.050	.0731			.0171	-.0094	-.0225	-.0823
.080				-.1908			
.085			-.0207				
.086		.2573					
.094	.0779						
.150				-.4273	-.4657	-.4247	-.4116
.163		.0000					
.177			-.2869				
.193		.0148					
.229	.1457						
.250				-.5323	-.5907	-.6659	-.6548
.274			-.3754				
.339		-.3461					
.362	.0412						
.400				-.2814	-.5715		-.9070
.402			-.3416				
.497	.0000						
.550				-.1158	-.1841		
.565			.0000				
.600							-.1574
.650						-.0198	
.700	.0442				-.1374		
.725				.0184			
.750						.1608	.0826
.760			.0255				
.775				.1627	.1489		
.806			.1595				
.834	.0598						
.850				.1306	.1450	.1519	
.857			.1356				
.865	.1856						
.900	.1646			.1187			.1215
.905			.1123		.0964		
.950				.0698		.1114	
.953			.0614				
.965	.0452						

ARC11-716 IA14 O1+T12+S12N25+AT10 UPPER WING (RB1U31)

ALPHAD(5) = -2.890 BETAD (2) = -7.990

SECTION (1)UPPER WING DEPENDENT VARIABLE CP

Y/BW	.2990	.3640	.4270	.5340	.6730	.7800	.8870
X/CW							
.000	.0785	.1816	.4694	.5875	.5394	.4913	.4953
.020				.3076	.3797	.2533	.2299
.025			.2960				
.040		.2457					
.045			.1767				
.050	.0535			.0332	-.0008	-.0136	-.0776
.080				-.1771			
.085			-.0079				
.086		.2440					
.094	.0646						
.150				-.4099	-.4383	-.4020	-.4084
.153		.0000					
.177			-.2691				
.193		.0159					
.229	.1316						
.250				-.5181	-.5909	-.6524	-.6460
.274			-.3635				
.339		-.3299					
.362	.0361						
.400				-.3189	-.5282		-.8995
.402			-.3789				
.497	.0000						
.550				-.1727	-.2650		
.565			.0000				
.600							-.1760
.650						-.0539	
.700	.0101				-.1364		
.725				-.0117			
.750						.1447	.0855
.760			-.0076				
.775				.1397	.1315		
.800			.1312				
.834	.0222						
.850				.1122	.1298	.1393	
.857			.1118				
.865	.1452						
.900	.1311			.1045			.1128
.905			.0855		.0791		
.950				.0543		.0959	
.953			.0377				
.965	.0237						

ARC11-716 IA14 O1+T12+S12N25+AT10 UPPER WING (RB1U31)

ALPHAO(5) = -2.870 BETAO (3) = -5.970

SECTION (1)UPPER WING DEPENDENT VARIABLE CP

Y/BW	.2990	.3640	.4270	.5340	.6730	.7800	.8870
X/CW							
.000	.0620	.1609	.4484	.5465	.4960	.4373	.4493
.020				.3135	.3442	.2524	.2197
.025			.2941				
.040		.2361					
.045			.1851				
.050	.0469			.0484	.0093	-.0085	-.0766
.080				-.1514			
.085			.0144				
.086		.2420					
.094	.0593						
.150				-.3714	-.4064	-.3925	-.4040
.163		.0000					
.177			-.2418				
.193		.0296					
.229	.1302						
.250				-.5043	-.5891	-.6371	-.6389
.274			-.3440				
.339		-.3050					
.362	.0430						
.400				-.3347	-.5015		-.8883
.402			-.3750				
.497	.0000						
.500				-.2271	-.3756		
.565			.0000				
.600							-.1281
.650						.0754	
.700	-.0235				-.1366		
.725				-.0474			
.750						.1301	.0764
.760			-.0420				
.775				.1147	.1198		
.800			.1033				
.834	-.0148						
.850				.0938	.1141	.1289	
.857			.0914				
.865	.1064						
.900	.0968			.0841			.1072
.905			.0731		[illegible].24		
.950				.0415		.0833	
.953			.0231				
.965	-.0004						

ARC11-716 IA14 .1+T12+S12N25+AT10 UPPER WING (RB1U31)

ALPHAD(5) = -2.860 BETAD (4) = -3.980

SECTION (1)UPPER WING DEPENDENT VARIABLE CP

X/CW \ Y/BW	.2990	.3640	.4270	.5340	.6730	.7900	.8870
.000	.0425	.1432	.4058	.5033	.4403	.3777	.3972
.020				.3143	.3139	.2536	.2133
.025			.2860				
.040		.2153					
.045			.1835				
.050	.0375			.0577	.0285	.0061	-.0720
.080				-.1293			
.085			.0271				
.086		.2275					
.094	.0457						
.150				-.3493	-.3675	-.3704	-.3949
.163		.0000					
.177			-.2228				
.193		.0371					
.229	.1178						
.250				-.4773	-.5591	-.6131	-.6379
.274			-.3321				
.339		-.2776					
.362	.0435						
.400				-.3424	-.5033		-.8647
.402			-.3751				
.497	.0000						
.550				-.2693	-.4533		
.565			.0000				
.600							-.1367
.650						-.1099	
.700	-.0830				-.1467		
.725				-.0748			
.750						.1257	.0764
.760			-.0836				
.775				.0924	.1017		
.800			.0726				
.834	-.0481						
.850				.0737	.0965	.1156	
.857			.0608				
.865	.0720						
.900	.0655			.0638			.1027
.905			.0439		.0491		
.950				.0230		.0664	
.953			.0001				
.965	-.0169						

ARC11-716 IA14 O1+T12+S12N25+AT10 UPPER WING (RB1U31)

ALPHAO(5) = -2.840 BETAO (5) = -1.990

SECTION (1)UPPER WING DEPENDENT VARIABLE CP

Y/BW	.2990	.3640	.4270	.5340	.6730	.7800	.8870
X/CW							
.000	.0335	.1249	.3803	.4598	.3903	.3218	.3437
.020				.3142	.2618	.2480	.2100
.025			.2832				
.040		.2024					
.045			.1906				
.050	.0290			.0750	.0370	.0165	-.0632
.080				-.1063			
.085			.0357				
.086		.2192					
.094	.0408						
.150				-.3161	-.3460	-.3523	-.3853
.163		.0000					
.177			-.1932				
.193		.0439					
.229	.1116						
.250				-.4702	-.5239	-.5799	-.6223
.274			-.2980				
.339		-.2583					
.362	.0492						
.400				-.3714	-.5192		-.8305
.402			-.3668				
.497	.0000						
.550				-.3273	-.4788		
.565			.0000				
.600							-.5711
.650						-.2801	
.700	-.0996				-.1478		
.725				-.1402			
.750						.1325	.0918
.760			-.1243				
.775				.0531	.0929		
.808			.0377				
.834	-.1065						
.850				.0399	.0905	.1155	
.857			.0355				
.865	.0237						
.900	.0309			.0361			.1057
.905			.0231		.0358		
.950				.0005		.0631	
.953			-.0122				
.965	-.0415						

ARC11-716 IA14 O1+T12+S12N25+AT10 UPPER WING (RB1U31)

ALPHAO(5) = -2.840 BETAO (6) = .010

SECTION (1)UPPER WING DEPENDENT VARIABLE CP

X/CW \ Y/BW	.2990	.3640	.42.	5340	.6730	.7800	.8870
.000	.0140	.1088	.3522	.4153	.3248	.2550	.2872
.020				.3057	.2355	.2454	.2029
.025			.2649				
.040		.1806					
.045			.1768				
.050	.0197			.0794	.0448	.0270	-.0547
.080				-.0878			
.085			.0406				
.086		.2043					
.094	.0297						
.150				-.2812	-.3157	-.3280	-.3747
.163		.0000					
.177			-.1803				
.193		.0434					
.229	.1037						
.250				-.4189	-.4891	-.5531	-.6056
.274			-.2783				
.339		-.2339					
.362	.0483						
.400				-.3476	-.5108		-.7725
.402			-.3446				
.497	.0000						
.550				-.3218	-.4871		
.565			.0000				
.600							-.6274
.650						-.5633	
.700	-.1257				-.1948		
.725				-.2402			
.750						.0970	.0343
.760			-.2076				
.775				.0247	.0073		
.808			-.0011				
.834	-.1845						
.850				.0245	.0779	.1079	
.857			.0010				
.865	-.0373						
.900	-.0074			.0272			.0872
.905			-.0008		.0254		
.950				-.0027		.0534	
.953			-.0309				
.965	-.0652						

DATE 10 JAN 75 TABULATED PRESSURE DATA - IA14A - VOL. 6 (RB1U31)

ARC11-716 IA14 O1+T12+312N25+AT10 UPPER WING

ALPHAO(5) = -2.040 BETAO (7) = 2.040

SECTION (1)UPPER WING DEPENDENT VARIABLE CP

Y/BW	.2990	.3640	.4270	.5340	.6730	.7800	.8870
X/CW							
.000	-.0161	.0846	.3203	.3859	.2863	.2045	.2344
.020				.2817	.2156	.2296	.1911
.025			.2342				
.040		.1495					
.045			.1554				
.050	.0059			.0639	.0430	.0224	-.0490
.080				-.0849			
.085			.0303				
.086		.1737					
.094	.0186						
.150				-.2655	-.2986	-.3112	-.3634
.163		.0000					
.177			-.1680				
.193		.0268					
.229	.0855						
.250				-.3909	-.4625	-.5198	-.5930
.274			-.2532				
.339		-.2234					
.362	.0414						
.400				-.3419	-.5017		-.7182
.402			-.3341				
.497	.0000						
.550				-.3335	-.4962		
.565			.0000				
.600							-.6391
.650						-.5778	
.700	-.1537				-.2328		
.725				-.3733			
.750						-.0850	-.0446
.760			-.3190				
.775				-.0997	-.0644		
.800			-.0677				
.834	-.2669						
.850				-.0080	.0181	.0433	
.857			-.0448				
.865	-.1272						
.900	-.0766			.0008			.0630
.905			-.0369		.0083		
.950				-.0164		.0207	
.953			-.0458				
.965	-.0950						

ARC11-716 IA14 OI+T12+S12N25+AT10 UPPER WING (RB1U31)

ALPHA0(5) = -2.860 BETA0 (8) = 4.050

SECTION (1)UPPER WING DEPENDENT VARIABLE CP

Y/SW	.2990	.3640	.4270	.5340	.6730	.7800	.8870
X/CW							
.000	-.0620	.0617	.2343	.3642	.2449	.1569	.1810
.020				.2771	.2039	.2098	.1694
.025			.2031				
.040		.1109					
.045			.1498				
.050	-.0124			.0781	.0454	.0169	-.0549
.080				-.0694			
.085			.0448				
.086		.1466					
.094	.0092						
.150				-.2397	-.2718	-.2897	-.3623
.163		.0000					
.177			-.1338				
.193		.0492					
.229	.0859						
.250				-.3553	-.4289	-.4872	-.5841
.274			-.2203				
.339		-.1883					
.362	.0422						
.400				-.3344	-.4947		-.6896
.492			-.3079				
.497	.0000						
.550				-.3515	-.5080		
.565			.0000				
.600							-.6493
.650						-.5925	
.700	-.1767				-.2377		
.725				-.4038			
.750						-.1891	-.1386
.760			-.3204				
.775				-.2285	-.1726		
.808			-.1580				
.834	-.2962						
.850				-.0716	-.0278	-.0180	
.857			-.0949				
.885	-.2147						
.900	-.1345			-.0281			.0296
.905			-.0635		-.0076		
.950				-.0363		.0097	
.953			-.0772				
.965	-.1050						

DATE 10 JAN 75 TABULATED PRESSURE DATA - IA14A - VOL. 6

ARC11-716 IA14 O1+T12+S12N25+AT10 UPPER WING (RB1U31)

ALPHAO(5) = -2.870 BETAO (9) = 6.060

SECTION (1)UPPER WING DEPENDENT VARIABLE CP

Y/BW	.2990	.3640	.4270	.5340	.6730	.7800	.8870
X/CW							
.000	-.1177	.0414	.1589	.3443	.2077	.0988	.1179
.020				.2462	.1945	.2034	.1627
.025			.1488				
.040		.0793					
.045			.1156				
.050	-.0393			.0727	.0520	.0284	-.0471
.080				-.0553			
.085			.0459				
.086		.1061					
.094	-.0098						
.150				-.2121	-.2416	-.2597	-.3433
.163		.0000					
.177			-.0999				
.193		.0451					
.229	.0652						
.250				-.3191	-.3949	-.4472	-.5622
.274			-.1941				
.339		-.1604					
.362	.0361						
.400				-.3223	-.4904		-.6631
.402			-.2769				
.497	.0000						
.550				-.3631	-.5082		
.565			.0000				
.600							-.6561
.650						-.6072	
.700	-.1992				-.2441		
.725				-.4042			
.750						-.2565	-.1811
.760			-.3320				
.775				-.2813	-.2388		
.808			-.2365				
.834	-.3016						
.850				-.1180	-.0745	-.0484	
.857			-.1529				
.865	-.2499						
.900	-.1882			-.0757			-.0014
.935			-.1123		-.0093		
.950				-.0601		-.0030	
.953			-.1061				
.965	-.1432						

ARC11-716 IA14 O1+T12+S12N25+AT10 UPPER WING (RB1U31)

ALPHAO(5) = -2.870 BETAO (10) = 8.070

SECTION (1)UPPER WING DEPENDENT VARIABLE CP

Y/BW	.2990	.3640	.4270	.5340	.6730	.7800	.8870
X/CW							
.000	-.1752	.0304	.1210	.2491	.1789	.0515	.0703
.020				.2395	.2031	.2013	.1519
.025			.1301				
.040		.0544					
.045			.1095				
.050	-.0647			.0919	.0708	.0387	-.0576
.080				-.0145			
.085			.0571				
.086		.0936					
.091	-.0235						
.150				-.1615	-.2109	-.2256	-.3251
.153		.0000					
.177			-.0686				
.193		.0502					
.229	.0587						
.250				-.2759	-.3538	-.4171	-.5305
.274			-.1608				
.339		-.1305					
.362	.0372						
.400				-.3058	-.4759		-.6453
.402			-.2504				
.497	.0000						
.550				-.3622	-.4979		
.565			.0000				
.600							-.6555
.650						-.6096	
.700	-.2115				-.2458		
.725				-.3946			
.750						-.2921	-.2131
.765			-.3335				
.775				-.3313	-.31[illegible]		
.6[illegible]			-.2823				
.834	-.3140						
.850				-.1616	-.1030	-.0845	
.857			-.2147				
.865	-.2939						
.900	-.2557			-.0953			-.0057
.905			-.1517		-.0184		
.950				-.0708		-.0127	
.953			-.1323				
.965	-.1764						

ARC11-716 IA14 O1+T12+S12N25+AT10 UPPER WING (RB1U31)

ALPHAO(5) = -2.030 BETAO (11) = 10.090

SECTION (1)UPPER WING DEPENDENT VARIABLE CP

X/CW \ Y/BW	.2990	.3640	.4270	.5340	.6730	.7800	.8870
.000	-.2302	.0182	.0941	.1474	.1593	.0099	.0106
.020				.1972	.1944	.1984	.1394
.025			.1144				
.040		.0398					
.045			.0963				
.050	-.1014			.0925	.0799	.0486	-.0310
.060				.0065			
.085			.0619				
.086		.0006					
.094	-.0490						
.150				-.1317	-.1872	-.2068	-.3061
.163		.0000					
.177			-.0565				
.193		.0473					
.229	.0491						
.250				-.2377	-.3277	-.3961	-.5062
.274			-.1466				
.339		-.1206					
.362	.0293						
.400				-.2965	-.4663		-.6374
.402			-.2454				
.497	.0000						
.530				-.3758	-.4995		
.585			.0000				
.600							-.6677
.650						-.6219	
.700	-.2326				-.2616		
.725				-.4100			
.750						-.3643	-.2147
.760			-.3504				
.775				-.3379	-.3614		
.808			-.2889				
.834	-.3268						
.850				-.1864	-.1328	-.1007	
.857			-.2315				
.865	-.3066						
.900	-.2727			-.1282			-.0417
.905			-.1737		-.0348		
.950				-.0945		-.0130	
.953			-.1491				
.965	-.1872						

ARC11-716 IA14 O1+712+S12N25+AT10 UPPER WING (RB1US1)

ALPHAO(8) = -.000 BETAO (1) = -10.000

SECTION (1)UPPER WING DEPENDENT VARIABLE CP

Y/BW	.2990	.3640	.4270	.5340	.6730	.7800	.8970
X/CW							
.000	.0906	.2069	.5123	.6696	.6410	.5966	.5939
.020				.1929	.3193	.0962	.0554
.025			.2231				
.040		.2416					
.045			.0815				
.050	.0490			-.1060	-.1735	-.1972	-.2843
.080				-.3243			
.085			-.1228				
.086		.2175					
.094	.0006						
.150				-.5795	-.6430	-.5994	-.5632
.163		.0000					
.177			-.3737				
.193		-.0563					
.229	.1251						
.250				-.6672	-.7664	-.6217	-.7811
.274			-.5016				
.339		-.4434					
.362	-.0040						
.400				-.6724	-.9034		-.9364
.402			-.5848				
.497	.0000						
.590				-.0995	-.1802		
.565			.0000				
.600							-.4086
.650						-.1646	
.700	.0234				-.1412		
.725				.0306			
.750						.0910	-.1255
.760			.0414				
.775				.1529	.1303		
.800			.1604				
.834	.0650						
.850				.1323	.1412	.1564	
.857			.1419				
.865	.1913						
.900	.1709			.1179			.0547
.905			.1176		.0967		
.950				.0722		.1199	
.953			.0710				
.965	.0548						

ARC11-716 IA14 O1+T12+S12N25+AT10 UPPER WING (RB1U31)

ALPHAO(6) = -.080 BETAO (2) = -7.980

SECTION (1)UPPER WING DEPENDENT VARIABLE CP

Y/BW	.2990	.3640	.4270	.5340	.6790	.7900	.8870
X/CW							
.000	.0674	.1843	.4872	.6388	.6070	.5620	.5814
.020				.1964	.2584	.0924	.0509
.025			.2206				
.040		.2279					
.045			.0869				
.050	.0332			-.0912	-.1531	-.1920	-.2818
.080				-.3041			
.085			-.1069				
.086		.2108					
.094	.0456						
.150				-.5472	-.6141	-.5814	-.5606
.163		.0000					
.177			-.3593				
.193		-.0513					
.229	.1158						
.250				-.6398	-.7351	-.8027	-.7774
.274			-.4813				
.339		-.4206					
.362	-.0036						
.400				-.6396	-.8869		-1.0090
.402			-.5918				
.497	.0000						
.550				-.1668	-.2328		
.565			.0000				
.600							-.4097
.650						-.1898	
.700	-.0116				-.1501		
.725				-.0012			
.750						.0917	-.0553
.760			.0105				
.775				.1341	.1282		
.808			.1358				
.834	.0371						
.850				.1147	.1314	.1495	
.857			.1211				
.865	.1020						
.900	.1474			.0988			.1085
.905			.0990		.0844		
.950				.0547		.1041	
.953			.0512				
.965	.0593						

ARC11-716 IA14 O1+T12+S12N25+AT10 UPPER WING (RB1US1)

ALPHAO(6) = -.670 BETAO (3) = -5.960

SECTION (1)UPPER WING DEPENDENT VARIABLE CP

Y/BW	.2990	.3640	.4270	.5340	.6750	.7800	.8870
X/CW							
.000	.0522	.1622	.4605	.6037	.5653	.5255	.3211
.020				.2000	.3186	.0918	.0408
.025			.2173				
.040		.2191					
.045			.0968				
.050	.0224			-.0004	-.1448	-.1800	-.2047
.060				-.2816			
.065			-.0961				
.086		.2[illegible]					
.094	.0362						
.150				-.5270	-.5868	-.5665	-.5601
.163		.0000					
.177			-.3416				
.193		-.0372					
.229	.1078						
.250				-.6118	-.6858	-.7813	-.7708
.274			-.4484				
.339		-.4145					
.362	-.0029						
.400				-.5591	-.8783		-1.0000
.402			-.5513				
.497	.0000						
.550				-.2370	-.3170		
.565			.0000				
.600							-.3870
.650						-.0805	
.700	-.0462				-.1363		
.725				-.0308			
.750						.1996	.0057
.760			-.0219				
.775				.1170	.1207		
.800			.1059				
.834	-.0036						
.850				.0806	.1172	.1537	
.857			.0942				
.862	.1197						
.900	.1155			.0924			.1175
.905			.0773		.0891		
.950				.0545		.0973	
.953			.0330				
.965	.0212						

ARC11-716 IA14 O1+T12+S12N25+AT10 UPPER WING (RB1US1)

ALPHAO(6) = -.060 BETAO (4) = -3.970

SECTION (11UPPER WING DEPENDENT VARIABLE CP

Y/BW	.2990	.3440	.4270	.5340	.6790	.7800	.8870
X/CW							
.000	.0339	.1479	.4393	.5731	.5297	.4800	.4806
.020				.2048	.2758	.0950	.0428
.025			.2160				
.040		.2016					
.045			.1009				
.050	.0169			-.0595	-.1294	-.1637	-.2647
.060				-.2567			
.085			-.0776				
.086		.1991					
.094	.0277						
.150				-.4783	-.5460	-.5360	-.5346
.163		.0000					
.177			-.3154				
.193		-.0296					
.229	.1036						
.250				-.5719	-.6397	-.7433	-.7519
.274			-.4214				
.339		-.3961					
.362	.0095						
.400				-.5674	-.8350		-.9733
.402			-.5288				
.497	.0000						
.550				-.2952	-.4741		
.565			.0000				
.600							-.4404
.650						-.1437	
.700	-.0910				-.1503		
.725				-.0680			
.750						.1480	.0106
.780			-.0672				
.775				.0921	.1163		
.800			.0787				
.834	-.0569						
.850				.0805	.1109	.1436	
.857			.0701				
.865	.0097						
.900	.0737			.0723			.1146
.905			.0632		.0513		
.950				.0351		.0822	
.953			.0202				
.965	-.0066						

ARC11-716 IA14 O1+T12+S12N25+AT10 UPPER WING (RB1U31)

ALPHAO(6) = -.660 BETAO (5) = -1.980

SECTION (1)UPPER WING DEPENDENT VARIABLE CP

Y/SW	.2990	.3640	.4270	.5340	.6730	.7800	.8870
X/CW							
.000	.0054	.1188	.3996	.5261	.4768	.4272	.4368
.020				.1993	.2193	.0941	.0394
.025			.2007				
.040		.1848					
.045			.0955				
.050	-.0015			-.0615	-.1197	-.1547	-.2574
.080				-.2513			
.085			-.0725				
.086		.1868					
.094	.0187						
.150				-.4485	-.5140	-.5082	-.5318
.163		.0000					
.177			-.3022				
.193		-.0261					
.229	.0949						
.250				-.5463	-.6343	-.7135	-.7397
.274			-.3968				
.339		-.3719					
.362	.0014						
.400				-.5241	-.7659		-.9645
.402			-.5035				
.497	.0000						
.590				-.3204	-.5043		
.565			.0000				
.600							-.5048
.650						-.2395	
.700	-.1240				-.1992		
.725				-.1207			
.750						.1417	.0760
.760			-.1255				
.775				.0885	.1054		
.800			.0440				
.834	-.1072						
.850				.0836	.1032	.1270	
.857			.0490				
.869	.0829						
.900	.0375			.0588			.1166
.905			.0404		.0498		
.950				.0251		.0094	
.953			-.0029				
.965	-.0234						

ARC11-716 IA14 OI+T12+S12N25+AT10 UPPER WING (RB1U31)

ALPHAO(6) = -.080 BETAO (6) = .010

SECTION (1)UPPER WING DEPENDENT VARIABLE CP

X/CW \ Y/BW	.2990	.3640	.4270	.5340	.6730	.7800	.8870
.000	-.0272	.0836	.3647	.4818	.4261	.3738	.3885
.020				.1915	.3031	.1046	.0454
.025			.1814				
.040		.1545					
.045			.0830				
.050	-.0141			-.0547	-.1007	-.1421	-.2384
.080				-.2372			
.085			-.0656				
.086		.1602					
.094	.0023						
.150				-.4175	-.4676	-.4668	-.5180
.163		.0000					
.177			-.2807				
.193		-.0273					
.229	.0784						
.250				-.5236	-.6006	-.6914	-.7197
.274			-.3531				
.339		-.3462					
.362	-.0009						
.400				-.4853	-.6630		-.9452
.402			-.4630				
.497	.0000						
.550				-.3467	-.5186		
.565			.0000				
.600							-.5998
.650						-.5730	
.700	-.1320				-.1977		
.725				-.2924			
.750						.1068	.0715
.760			-.2330				
.775				.0340	.0541		
.806			-.0085				
.834	-.2264						
.850				.0457	.0851	.1152	
.857			.0043				
.885	-.0705						
.900	-.0164			.0407			.1074
.905			.0006		.0380		
.950				.0130		.0583	
.953			-.0187				
.965	-.0326						

ARC11-716 IA14 O1+T12+S12N25+AT10 UPPER WING (RB1U31)

ALPHAO(6) = -.670 BETAO (7) = 2.050

SECTION (1)UPPER WING DEPENDENT VARIABLE CP

X/CW \ Y/BW	.2990	.3640	.4270	.5340	.6730	.7800	.8870
.000	-.0716	.0483	.3166	.4476	.3786	.3181	.3354
.020				.1773	.2759	.0958	.0386
.025			.1551				
.040		.1201					
.045			.0897				
.050	-.0270			-.0532	-.1008	-.1283	-.2275
.080				-.2235			
.085			-.0671				
.086		.1366					
.094	-.0053						
.130				-.3822	-.4353	-.4446	-.5024
.163		.0000					
.177			-.2631				
.193		-.0206					
.229	.0697						
.250				-.4971	-.5790	-.6630	-.7102
.274			-.3374				
.339		-.3043					
.362	.0011						
.400				-.4295	-.5900		-.9047
.402			-.4195				
.497	.0080						
.590				-.3667	-.5332		
.565			.0000				
.600							-.6377
.650						-.5900	
.700	-.1730				-.2235		
.725				-.3778			
.750						-.0014	-.0004
.760			-.3297				
.775				-.0005	-.0230		
.800			-.1991				
.834	-.2901						
.850				.0001	.0484	.0785	
.857			-.0853				
.865	-.1960						
.900	-.1116			.0187			.1012
.905			-.0473		.0207		
.950				-.0021		.0457	
.955			-.0548				
.965	-.0067						

ARC11-716 IA14 O1+T12+S12N25+AT10 UPPER WING (RB1US1)

ALPHAO(B) = -.000 BETAO (B) = 4.050

SECTION (1)UPPER WING DEPENDENT VARIABLE CP

X/CW \ Y/SW	.2990	.3640	.4270	.5840	.6730	.7000	.8070
.000	-.1013	.0331	.2215	.4297	.3397	.2792	.2951
.020				.1750	.2640	.0864	.0313
.025			.1247				
.040		.0058					
.045			.0403				
.050	-.0363			-.0425	-.0090	-.1310	-.2242
.080				-.1935			
.085			-.0460				
.086		.1026					
.094	-.0098						
.150				-.3561	-.4057	-.4349	-.4899
.163		.0000					
.177			-.2203				
.193		-.0093					
.229	.0612						
.250				-.4523	-.5420	-.6240	-.6933
.274			-.3075				
.339		-.2558					
.362	.0051						
.450				-.5980	-.5729		-.8548
.402			-.3648				
.497	.0000						
.550				-.3747	-.5347		
.565			.0000				
.600							-.6655
.650						-.6148	
.700	-.1982				-.2360		
.725				-.4275			
.750						-.1889	-.1706
.760			-.3447				
.775				-.2936	-.1834		
.808			-.2392				
.834	-.3101						
.850				-.1053	-.0388	-.0083	
.857			-.1260				
.865	-.2482						
.900	-.1871			-.0463			.0253
.905			-.0804		-.0003		
.950				-.0317		.0060	
.955			-.0794				
.965	-.1196						

ARC11-716 IA14 O1+T12+S12N25+A710 UPPER WING (RB1U31)

ALPHAO(6) = -.000 BETAO (9) = 6.060

SECTION (1)UPPER WING DEPENDENT VARIABLE CP

Y/BW	.2990	.3640	.4270	.5340	.6730	.7800	.8870
X/CW							
.000	-.1599	.0101	.1410	.3966	.3091	.2302	.2481
.020				.1587	.2491	.0913	.0396
.025			.0738				
.040		.0508					
.045			.0392				
.050	-.0638			-.0332	-.0723	-.1103	-.2026
.060				-.1733			
.065			-.0369				
.066		.0678					
.094	-.0280						
.150				-.3253	-.3712	-.4044	-.4681
.163		.0000					
.177			-.1799				
.193		-.0104					
.229	.0437						
.250				-.4074	-.5006	-.5831	-.6682
.274			-.2397				
.339		-.2134					
.362	-.0027						
.400				-.3804	-.5558		-.7835
.402			-.3206				
.497	.0000						
.550				-.3866	-.5383		
.565			.0000				
.600							-.6909
.650						-.6259	
.700	-.2223				-.2484		
.725				-.4116			
.750						-.2509	-.1743
.760			-.3328				
.775				-.3044	-.2491		
.800			-.2574				
.834	-.3141						
.850				-.1193	-.0796	-.0640	
.857			-.1857				
.865	-.2982						
.880	-.2380			-.0609			.0224
.895			-.1311		-.0150		
.930				-.0619		-.0102	
.953			-.1000				
.965	-.1300						

ARC11-716 IA14 O4+T12+S12N25+AT10 UPPER WING (RB1U31)

ALPHA0(6) = -.000 BETA0 (10) = 0.000

SECTION (1)UPPER WING DEPENDENT VARIABLE CP

Y/BW	.2980	.3640	.4270	.5340	.6730	.7800	.8870
X/CW							
.000	-.2160	.0051	.0911	.2367	.2797	.1810	.1945
.020				.1138	.2346	.0954	.0392
.025			.0323				
.040		.0336					
.045			.0231				
.050	-.0832			-.0222	-.0478	-.0885	-.1843
.080				-.1313			
.085			-.0240				
.086		.0477					
.094	-.0588						
.150				-.2554	-.3337	-.3656	-.4495
.163		.0000					
.177			-.1454				
.1[illegible]		-.0033					
.229	.0365						
.250				-.3488	-.4549	-.5327	-.6445
.274			-.2221				
.339		-.1848					
.362	-.0828						
.400				-.3572	-.3441		-.7307
.402			-.2965				
.497	.0000						
.550				-.3850	-.5429		
.565			.0000				
.600							-.6884
.650						-.6372	
.700	-.2573				-.2550		
.725				-.3883			
.750						-.2359	-.1452
.760			-.3269				
.775				-.2804	-.2475		
.808			-.2307				
.834	-.3300						
.850				-.1420	-.0748	-.0520	
.857			-.2177				
.865	-.2980						
.900	-.2547			-.0926			.0265
.905			-.1676		-.0140		
.952				-.0724		.0103	
.953			-.1390				
.965	-.1734						

ARC11-716 IA14 O1+T12+S12N25+AT10 UPPER WING (RB1U31)

ALPHAO(6) = -.000 BETAO (11) = 10.120

SECTION (1)UPPER WING DEPENDENT VARIABLE CP

X/CW \ Y/BW	.2990	.3640	.4270	.5340	.6730	.7800	.8870
.000	-.2854	-.0081	.0709	.1605	.2343	.1539	.1491
.020				.0696	.2449	.1087	.0523
.025			.0467				
.040		.0215					
.045			.0291				
.050	-.1518			-.0240	-.0203	-.0651	-.1522
.060				-.0949			
.065			-.0104				
.086		.0416					
.094	-.0064						
.150				-.2028	-.2626	-.3187	-.4099
.153		.0000					
.177			-.1165				
.193		.0052					
.229	.0303						
.250				-.2067	-.4010	-.4834	-.6053
.274			-.1928				
.339		-.1653					
.362	-.0006						
.400				-.3279	-.5189		-.6825
.402			-.2744				
.497	.0000						
.550				-.3932	-.5251		
.565			.0000				
.600							-.6015
.650						-.6310	
.700	-.2468				-.2815		
.725				-.3981			
.750						-.3315	-.2116
.760			-.3492				
.775				-.3904	-.3348		
.800			-.3080				
.834	-.3080						
.850				-.1900	-.1376	-.1081	
.887			-.2256				
.895	-.3145						
.900	-.2043			-.1359			-.0358
.905			-.1738		-.0444		
.950				-.1048		-.0191	
.953			-.1490				
.965	-.1900						

ARC11-716 IA14 O1+T12+S12N25+AT10 UPPER WING (RB1US1)

ALPHAO(7) = 2.980 BETAO (1) = -10.000

SECTION (1)UPPER WING DEPENDENT VARIABLE CP

X/CW \ Y/BW	.2990	.3640	.4270	.5340	.6750	.7800	.8670
.000	.0677	.1815	.5095	.6886	.6573	.5995	.5715
.020				.0411	.1319	-.1185	-.1994
.025			.1110				
.040		.2013					
.045			-.0348				
.050	.0183			-.2546	-.3460	-.3992	-.5191
.080				-.4806			
.085			-.2515				
.088		.1682					
.094	.0319						
.150				-.7223	-.8055	-.7586	-.7494
.163		.0000					
.177			-.4928				
.193		-.1312					
.229	.1071						
.250				-.8306	-.9395	-.9811	-.8868
.274			-.6113				
.339		-.5229					
.362	-.0449						
.400				-.8575	-.9520		-.5804
.402			-.7770				
.497	.0000						
.550				-.0402	-.4422		
.565			.0000				
.600							-.5126
.650						-.3937	
.700	-.0157				-.1534		
.725				.0077			
.750						-.2818	-.3864
.760			.0373				
.775				.1030	.0109		
.808			.1433				
.834	.0724						
.850				.1048	.0855	-.1682	
.857			.1274				
.865	.2002						
.900	.1712			.1023			-.2837
.905			.1109		.1102		
.950				.0735		-.1120	
.953			.0676				
.965	.0591						

ARC11-716 IA14 01+T12+S12N25+AT10 UPPER WING (RB1U31)

ALPHAO(7) = 1.980 BETAO (2) = -5.980

SECTION (1)UPPER WING DEPENDENT VARIABLE CP

X/CW \ Y/BW	.2990	.3640	.4270	.5340	.6730	.7800	.8870
.000	.0190	.1285	.4572	.6330	.5958	.5348	.5073
.020				.0447	.0804	-.1286	-.2240
.025			.1043				
.040		.1897					
.045			-.0254				
.050	-.0106			-.2330	-.3261	-.3955	-.5218
.060				-.4508			
.065			-.2206				
.086		.1480					
.094	.0046						
.150				-.6697	-.8063	-.7445	-.7480
.163		.0000					
.177			-.4578				
.195		-.1218					
.229	.0061						
.250				-.7755	-.8875	-.9636	-.9041
.274			-.5773				
.339		-.4954					
.362	-.0474						
.400				-.8994	-1.0160		-.6406
.402			-.7377				
.497	.0000						
.550				-.1460	-.3921		
.565			.0100				
.600							-.5461
.650						-.4279	
.700	-.0850				-.1530		
.725				-.0534			
.750						-.2965	-.4012
.760			-.0153				
.775				.0690	.0312		
.800			.0988				
.834	.0090						
.850				.0692	.0796	-.1373	
.857			.0092				
.865	.1299						
.900	.1227			.0732			-.2799
.903			.0786		.0781		
.950				.0906		-.0580	
.953			.0440				
.965	.0270						

ARC11-716 IA14 O1+T12+212N25+AT10 UPPER WING (RB1UB1)

ALPHAO(7) = 1.970 BETAO (3) = -3.900

SECTION (1)UPPER WING DEPENDENT VARIABLE CP

Y/BW	.2990	.3640	.4270	.5340	.6730	.7800	.8870
X/CW							
.000	-.0084	.1073	.4243	.6004	.5556	.4990	.4099
.020				.0521	.1056	-.1303	-.2305
.025			.1025				
.040		.1602					
.045			-.0118				
.050	-.0230			-.2215	-.3240	-.3969	-.5226
.060				-.4328			
.065			-.2095				
.086		.1437					
.094	-.0032						
.150				-.6501	-.7937	-.7392	-.7454
.163		.0000					
.177			-.4356				
.193		-.1135					
.229	.0796						
.290				-.7309	-.8605	-.9448	-.9153
.274			-.5468				
.339		-.4757					
.362	-.0456						
.400				-.8043	-.9909		-.7097
.402			-.7011				
.497	.0000						
.590				-.2682	-.4130		
.563			.0000				
.600							-.5643
.650						-.4069	
.700	-.1347				-.1507		
.725				-.0625			
.750						-.2513	-.4047
.760			-.0480				
.775				.0624	.0562		
.800			.0748				
.834	-.0498						
.850				.0664	.0714	-.0603	
.857			.0640				
.865	.0043						
.900	.0075			.0674			-.2526
.905			.0572		.0659		
.950				.0489		-.0019	
.955			.0231				
.965	.0057						

DATE 10 JAN 75 TABULATED PRESSURE DATA - IA14A - VOL. 6

ARC11-713 IA14 O1+T12+S12N25+AT10 UPPER WING (RB1US1)

ALPHAO(7) = 1.980 BETAO (4) = -1.990

SECTION (1)UPPER WING DEPENDENT VARIABLE CP

X/CW \ Y/BW	.2990	.3640	.4270	.5340	.6730	.7800	.8870
.000	-.0383	.0887	.3908	.5599	.5179	.4599	.4397
.020				.0520	.1683	-.1245	-.2160
.025			.0951				
.040		.1413					
.045			-.0162				
.050	-.0405			-.2079	-.3088	-.3790	-.5082
.060				-.4030			
.085			-.1874				
.086		.1336					
.094	-.0187						
.150				-.6166	-.7342	-.7110	-.7377
.163		.0000					
.177			-.4114				
.193		-.1053					
.229	.0667						
.250				-.6838	-.8074	-.8910	-.9031
.274			-.5256				
.339		-.4558					
.362	-.0472						
.400				-.7429	-.9552		-.9303
.402			-.6409				
.497	.0000						
.550				-.3609	-.5243		
.565			.0000				
.600							-.6079
.650						-.3718	
.700	-.1671				-.1570		
.725				-.0994			
.750						-.1427	-.3896
.760			-.0944				
.775				.0574	.0634		
.800			.0401				
.834	-.1052						
.850				.0617	.0733	.0377	
.857			.0416				
.865	.0242						
.900	.0478			.0589			-.2008
.905			.0391		.0539		
.950				.0351		.0602	
.953			.0128				
.965	-.0142						

DATE 10 JAN 75 TABULATED PRESSURE DATA - IA14A - VOL. 6

ARC11-716 IA14 O1+T12+S12N25+AT10 UPPER WING (RB1U31)

ALPHAO(7) = 1.980 BETAO (5) = .060

SECTION (1)UPPER WING DEPENDENT VARIABLE CP

Y/BW	.2990	.3640	.4270	.5340	.6730	.7800	.8870
X/CW							
.000	-.0851	.0227	.3498	.5178	.4783	.4224	.4076
.020				.0500	.0829	-.1174	-.2131
.025			.0809				
.040		.1121					
.045			-.0271				
.050	-.0490			-.2030	-.2925	-.3681	-.4907
.080				-.3811			
.085			-.1839				
.086		.1116					
.094	-.0273						
.150				-.5317	-.6872	-.6848	-.7110
.163		.0000					
.177			-.3907				
.193		-.1043					
.229	.0569						
.250				-.6725	-.7449	-.6385	-.6766
.274			-.4979				
.339		-.4370					
.362	-.0491						
.400				-.6765	-.9231		-1.0520
.402			-.5968				
.497	.0000						
.550				-.3968	-.5612		
.565			.0000				
.600							-.6297
.650						-.3728	
.700	-.1920				-.1840		
.725				-.2709			
.750						-.0216	-.3793
.760			-.2200				
.775				.0064	.0646		
.800			-.0113				
.834	-.2299						
.850				.0301	.0790	.0786	
.857			-.0023				
.865	-.0020						
.900	-.0220			.0341			-.1207
.905			.0120		.0466		
.950				.0150		.0524	
.953			-.0095				
.965	-.0442						

ARC11-716 IA14 O1+T12+S12N25+AT10 UPPER WING (R01U01)

ALPHAO(7) = 1.9% BETAO (6) = 2.040

SECTION (1)UPPER WING DEPENDENT VARIABLE CP

Y/BW	.2990	.3640	.4270	.5340	.6730	.7800	.8870
X/CW							
.000	-.1241	-.0218	.2953	.4841	.4359	.3795	.3749
.020				.0447	.1373	-.1102	-.2008
.025			.0548				
.040		.0745					
.045			-.0360				
.050	-.0616			-.1965	-.2809	-.3472	-.4624
.060				-.3587			
.065			-.1801				
.086		.0852					
.094	-.0357						
.150				-.5569	-.6439	-.6513	-.6823
.163		.0000					
.177			-.3597				
.193		-.0931					
.229	.0459						
.250				-.6092	-.6744	-.7931	-.8397
.274			-.4653				
.339		-.4062					
.362	-.0467						
.400				-.5767	-.8263		-1.0340
.402			-.5148				
.497	.0000						
.550				-.3996	-.5096		
.565			.0000				
.600							-.6369
.650						-.5604	
.700	-.2124				-.2340		
.725				-.3601			
.750						-.0394	-.2574
.760			-.2095				
.775				-.1579	-.0345		
.800			-.1471				
.834	-.2937						
.850				-.0201	.0230	.0592	
.857			-.0802				
.865	-.2161						
.900	-.1085			.0079			-.0369
.905			-.0392		.0240		
.950				-.0035		.0313	
.953			-.0459				
.965	-.0783						

ARC11-716 IA14 O1+T12+S12N25+AT10 UPPER WING (RB1U31)

ALPHAO(7) = 2.050 BETAO (7) = 4.050

SECTION (1)UPPER WING DEPENDENT VARIABLE CP

Y/BW	.2990	.3640	.4270	.5348	.6738	.7800	.8870
X/CW							
.000	-.1566	-.0965	.1846	.4641	.4000	.3401	.3308
.020				.0360	.1401	-.1205	-.2152
.025			.0159				
.040		.0467					
.045			-.0514				
.050	-.0653			-.1837	-.2735	-.3436	-.4666
.080				-.3463			
.085			-.1619				
.088		.0921					
.094	-.0362						
.150				-.5044	-.6136	-.6259	-.6711
.163		.0000					
.177			-.3339				
.193		-.0801					
.229	.0330						
.250				-.5743	-.6676	-.7590	-.8173
.274			-.4048				
.339		-.3403					
.362	-.0467						
.400				-.5149	-.7410		-1.0210
.402			-.4557				
.497	.0000						
.550				-.4172	-.5844		
.585			.0000				
.600							-.6276
.650						-.6246	
.700	-.2356				-.2376		
.725				-.4082			
.750						-.1394	-.1700
.760			-.3298				
.775				-.2633	-.1589		
.808			-.2463				
.834	-.3297						
.850				-.0679	-.0257	-.0116	
.857			-.1498				
.869	-.3088						
.900	-.2192			-.0254			-.0035
.907			-.1018		.0040		
.950				-.0209		.0098	
.953			-.0700				
.965	-.1199						

ARC11-716 IA14 O4+T12+B12N25+AT10 UPPER WING (RB1US1)

ALPHAO(7) = 2.050 BETAO (8) = 6.370

SECTION (1)UPPER WING DEPENDENT VARIABLE CP

X/CW \ Y/BW	.2990	.3640	.4270	.5340	.6730	.7800	.8870
.000	-.2106	-.0420	.0060	.3898	.3749	.3051	.3080
.020				.0150	.0309	-.1040	-.1889
.025			-.0306				
.040		.0142					
.045			-.0766				
.050	-.0946			-.1733	-.2900	-.3191	-.4273
.060				-.3215			
.065			-.1533				
.086		.0229					
.094	-.0647						
.150				-.4428	-.5864	-.5641	-.6375
.163		.0000					
.177			-.2818				
.193		-.0838					
.229	.0200						
.250				-.5177	-.6245	-.7303	-.7958
.274			-.3560				
.339		-.2920					
.362	-.0500						
.400				-.4904	-.6716		-.9706
.402			-.3921				
.497	.0000						
.550				-.4337	-.6012		
.565			.0000				
.600							-.7113
.650						-.6577	
.700	-.2607				-.2403		
.725				-.3953			
.750						-.1462	-.1249
.760			-.3192				
.775				-.2575	-.1588		
.808			-.2362				
.834	-.2909						
.850				-.0990	-.0402	-.0174	
.857			-.1600				
.865	-.2619						
.900	-.1978			-.0613			.0173
.905			-.1142		.0162		
.950				-.0416		.0150	
.953			-.1[illegible]				
.965	-.1279						

ARC11-716 IA14 O1+T12+S12N25+AT10 UPPER WING (RB1US1)

ALPHAO(7) = 2.040 BETAO (9) = 0.090

SECTION (1)UPPER WING DEPENDENT VARIABLE CP

X/CW \ Y/BW	.2990	.3640	.4270	.5340	.6730	.7800	.8870
.000	-.2502	-.0344	.0423	.2137	.3564	.2769	.2021
.020				-.0402	.0858	-.0777	-.1523
.025			-.0253				
.040		.3052					
.045			-.0616				
.050	-.1323			-.1639	-.2037	-.2688	-.3928
.080				-.2612			
.085			-.1188				
.086		.0082					
.094	-.1060						
.150				-.3706	-.5160	-.5071	-.5930
.163		.0000					
.177			-.2323				
.193		-.0749					
.229	.0155						
.250				-.4327	-.5362	-.6640	-.7579
.274			-.2963				
.339		-.2565					
.362	-.0447						
.400				-.4072	-.6367		-.8928
.402			-.3467				
.497	.0000						
.550				-.4243	-.5797		
.565			.0000				
.600							-.7239
.650						-.6645	
.700	-.2882				-.2625		
.725				-.3913			
.750						-.2320	-.1542
.760			-.2993				
.775				-.2927	-.2570		
.808			-.2485				
.834	-.2943						
.850				-.1579	-.0882	-.0780	
.857			-.1702				
.865	-.2700						
.900	-.2297			-.1127			-.0094
.905			-.1390		-.0196		
.950				-.0844		-.0009	
.953			-.1165				
.965	-.1636						

ARC11-716 IA14 O1+T12+S12N25+AT10 UPPER WING (RB1US1)

ALPHAO(7) = 2.020 BETAO (10) = 10.110

SECTION (1)UPPER WING DEPENDENT VARIABLE CP

X/CW \ Y/BW	.2990	.3640	.4270	.5340	.6730	.7800	.8870
.000	-.2990	-.0377	.0116	.1287	.2654	.2505	.2433
.020				-.0682	.1152	-.0429	-.1278
.025			-.0224				
.040		-.0115					
.045			-.0508				
.050	-.1659			-.1567	-.1738	-.2293	-.3476
.080				-.2182			
.085			-.1006				
.086		-.0083					
.094	-.1403						
.150				-.2936	-.4497	-.4628	-.5432
.163		.0000					
.177			-.1984				
.193		-.0525					
.229	.0127						
.230				-.3595	-.4910	-.5970	-.6956
.274			-.2608				
.339		-.2199					
.362	-.0540						
.400				-.3723	-.5917		-.8009
.402			-.3217				
.497	.0000						
.590				-.4208	-.5639		
.565			.0000				
.600							-.7119
.650						-.6522	
.700	-.2866				-.2534		
.725				-.3731			
.750						-.2088	-.1784
.760			-.3321				
.775				-.3101	-.2367		
.800			-.2097				
.834	-.3200						
.850				-.1944	-.1103	-.0550	
.857			-.2132				
.865	-.3161						
.900	-.2711			-.1395			.0092
.905			-.1680		-.0439		
.950				-.0943		.0048	
.955			-.1432				
.965	-.1000						

ARC11-716 IA14 O1+T12+S12N25+AT10 UPPER WING (RB1U31)

ALPHAO(8) = 4.110 BETAO (1) = -10.000

SECTION (1)UPPER WING DEPENDENT VARIABLE CP

Y/BW	.2990	.3640	.4270	.5140	.6700	.7900	.8870
X/CW							
.000	.0422	.1200	.4771	.6759	.6331	.5569	.5178
.020				-.0846	.0294	-.2809	-.3876
.025			.0063				
.040		.1592					
.045			-.1375				
.055	-.0191			-.3850	-.4725	-.5399	-.6772
.080				-.5955			
.085			-.3746				
.086		.1127					
.094	.0082						
.150				-.8619	-.9146	-.9025	-.7850
.163		.0000					
.177			-.5858				
.193		-.1987					
.229	.0829						
.250				-.9742	-1.0470	-.8773	-.7430
.274			-.6983				
.339		-.5852					
.362	-.0833						
.400				-.9155	-.7902		-.5462
.402			-.8836				
.497	.0000						
.590				-.2555	-.5288		
.565			.0000				
.600							-.4634
.650						-.5018	
.700	-.0266				-.1973		
.725				-.0809			
.750						-.4056	-.3685
.760			-.0223				
.775				.0336	-.2779		
.800			.1015				
.834	.0485						
.850				.0600	-.1681	-.3251	
.857			.0964				
.865	.1540						
.900	.1262			.0768			-.3161
.905			.0920		-.0458		
.950				.0620		-.2325	
.953			.0605				
.965	.0920						

ARC11-716 IA14 O1+T12+S12N25+AT10 UPPER WING (RS1US1)

ALPHAO(5) = 4.130 BETAO (2) = -7.960

SECTION (1)UPPER WING DEPENDENT VARIABLE CP

Y/BW	.2990	.3840	.4270	.5340	.6730	.7800	.8870
X/CW							
.000	.0180	.0934	.4560	.6560	.6116	.5294	.4862
.020				-.0752	-.0342	-.2870	-.3983
.025			.0136				
.040		.1322					
.045			-.1350				
.050	-.0424			-.3643	-.4593	-.5349	-.6796
.060				-.5791			
.065			-.3900				
.066		.1020					
.094	-.0155						
.150				-.8314	-.9007	-.8907	-.8251
.163		.0000					
.177			-.5600				
.193		-.1942					
.229	.0702						
.250				-.9153	-1.0550	-.8914	-.7009
.274			-.6000				
.339		-.5729					
.362	-.0025						
.400				-.9333	-.8254		-.5771
.402			-.8405				
.497	.0000						
.550				-.1687	-.4630		
.565			.0000				
.600							-.4686
.650						-.5300	
.700	-.0007				-.2000		
.725				-.0826			
.750						-.4320	-.3074
.760			-.0413				
.775				.0335	-.2002		
.800			.0910				
.834	.0252						
.850				.0430	-.1402	-.3292	
.857			.0760				
.865	.1232						
.900	.1064			.0625			-.3900
.905			.0720		-.0183		
.950				.0517		-.2713	
.953			.0490				
.965	.0330						

ARC11-716 IA14 O1+T12+S12N25+AT10 UPPER WING (RB1U91)

ALPHAO(8) = 4.190 BETAO (3) = -5.980

SECTION (11)UPPER WING DEPENDENT VARIABLE CP

X/CW \ Y/BW	.2990	.3640	.4270	.5543	.6720	.7800	.8620
.000	-.0141	.0731	.4285	.6268	.5773	.4[illegible]	.4520
.020				-.0091	.0093	-.2991	-.4183
.023			.0120				
.040		.1270					
.045			-.1235				
.050	-.0474			-.3497	-.4570	-.5498	-.6997
.060				-.5622			
.065			-.3371				
.066		.1015					
.094	-.0195						
.150				-.7926	-.8981	-.8910	-.8591
.163		.0000					
.177			-.5436				
.193		-.1810					
.229	.0690						
.250				-.8805	-1.0390	-.9898	-.8076
.274			-.6624				
.339		-.5909					
.362	-.0810						
.400				-.9219	-.8730		-.6185
.402			-.8163				
.497	.0000						
.550				-.1302	-.4321		
.565			.0000				
.600							-.4947
.650						-.5221	
.700	-.1010				-.1052		
.725				-.0913			
.750						-.4081	-.4060
.760			-.0458				
.775				.0224	-.2183		
.800			.0797				
.834	.0101						
.850				.0382	-.0850	-.2950	
.857			.0865				
.865	.1110						
.900	.0957			.0641			-.3115
.905			.0609		.0187		
.950				.0555		-.1871	
.953			.0396				
.965	.0302						

ARC11-716 IA14 O4+T12+S12N25+AT10 UPPER WING (RB1U31)

ALPHAO(8) = 4.100 BETAO (4) = -3.360

SECTION (1)UPPER WING DEPENDENT VARIABLE CP

X/CM \ Y/BW	.2980	.3640	.4270	.5340	.6730	.7800	.8870
.000	-.6414	.0499	.4007	.5996	.5502	.4655	.4209
.020				-.0604	-.0454	-.2096	-.4161
.025			.0235				
.040		.119[illegible]					
.045			-.1118				
.050	-.0275			-.3333	-.4452	-.5320	-.6924
.060				-.5423			
.065			-.3060				
.086		.0000					
.094	-.0255						
.190				-.7538	-.8654	-.8642	-.6742
.163		.0000					
.177			-.5150				
.195		-.1717					
.229	.0081						
.250				-.8427	-.9987	-1.0250	-.8457
.274			-.6276				
.339		-.5396					
.362	-.0803						
.400				-.9115	-.9781		-.6463
.402			-.7863				
.497	.0000						
.550				-.1610	-.4308		
.565			.0000				
.600							-.5167
.650						-.5461	
.700	-.1373				-.1827		
.725				-.1098			
.750						-.4178	-.4178
.760			-.0744				
.775				.0093	-.1863		
.800			.0505				
.834	-.0510						
.850				.0274	-.0385	-.2871	
.857			.0497				
.865	.0793						
.900	.0739			.0409			-.3151
.905			.0470		.0574		
.950				.0403		-.1492	
.955			.0224				
.965	.0188						

ARC11-716 IA14 O1+T1L+S12N25+AT10 UPPER WING (RB1US1)

ALPHAO(8) = 4.840 BETAO (5) = -1.980

SECTION (1)UPPER WING DEPENDENT VARIABLE CP

Y/CW	.2990	.3640	.4270	.5040	.6730	.7980	.8670
X/CW							
.000	-.0771	.0193	.3713	.5683	.5229	.4416	.3978
.020				-.0447	-.0821	-.2805	-.4095
.025			.0262				
.040		.1057					
.045			-.0968				
.050	-.0650			-.3085	-.4250	-.5108	-.6771
.080				-.5141			
.085			-.2734				
.086		.0910					
.094	-.0330						
.150				-.7122	-.8386	-.8324	-.8755
.163		.0000					
.177			-.4853				
.193		-.1644					
.229	.0326						
.250				-.8485	-.9443	-1.0320	-.8925
.274			-.5915				
.339		-.5197					
.362	-.0780						
.400				-.9253	-1.0490		-.7116
.402			-.7421				
.497	.0000						
.550				-.3180	-.4647		
.565			.0000				
.600							-.5557
.650						-.5485	
.700	-.1993				-.1861		
.725				-.1507			
.750						-.4087	-.4482
.760			-.0934				
.775				-.0276	-.1244		
.800			.0306				
.834	-.0086						
.850				-.0104	-.0110	-.0734	
.857			.0200				
.865	.0372						
.900	.0404			.0113			- 3413
.905			.0259		.0504		
.950				.0069		-.1324	
.95[illegible]			.0033				
.9[illegible]5	-.0081						

ARC 1-716 IA14 OB^T12+S12N25+AT10 UPPER WING (RB1US1)

ALPHAO(6) = 4.050 BETAO (6) = .030

SECTION (1)UPPER WING DEPENDENT VARIABLE CP

Y/BW	.2990	.3640	.4270	.5340	.6730	.7800	.8870
X/CW							
.000	-.1287	-.0377	.3289	.5294	.4939	.4049	.3651
.020				-.0520	-.0459	-.2759	-.4148
.025			.0115				
.040		.0787					
.045			-.1084				
.050	-.0830			-.3067	-.4168	-.5040	-.6753
.080				-.5016			
.085			-.2628				
.086		.0740					
.094	-.0454						
.150				-.6948	-.8285	-.8133	-.8643
.163		.0000					
.177			-.4654				
.193		-.1602					
.229	.0429						
.250				-.7879	-.9152	-1.0070	-.9773
.274			-.5668				
.339		-.4994					
.362	-.0785						
.400				-.8444	-1.0290		-.8216
.402			-.7108				
.497	.0000						
.550				-.4108	-.4180		
.565			.0000				
.600							-.5748
.650						-.5413	
.700	-.2892				-.1956		
.725				-.1942			
.750						-.3755	-.4344
.760			-.1557				
.775				-.0362	-.0568		
.808			-.0140				
.834	-.1909						
.850				.0031	-.0013	-.1909	
.857			.0014				
.865	-.0350						
.900	.0007			.0130			-.3199
.905			.0063		.0434		
.950				.0039		-.0548	
.953			-.0030				
.965	-.0233						

ARC11-716 IA14 O6+T12+S1EN29+AT10 UPPER WING (RB1U31)

ALPHAO(6) = 4.090 BETAO (7) = 2.090

SECTION (1)UPPER WING DEPENDENT VARIABLE CP

Y/BW	.2990	.3640	.4270	.5340	.6730	.7880	.8870
X/CW							
.000	-.1746	-.0871	.2679	.4090	.4460	.3094	.3356
.020				-.0605	.0290	-.2712	-.4143
.025			-.0166				
.040		.0434					
.045			-.1185				
.050	-.0675			-.2995	-.4102	-.4927	-.6655
.060				-.4883			
.065			-.2618				
.066		.0456					
.094	-.0521						
.150				-.6650	-.7982	-.7985	-.8441
.163		.0000					
.177			-.4457				
.193		-.1900					
.229	.0294						
.250				-.7203	-.8610	-.9711	-1.0050
.274			-.5413				
.339		-.4849					
.362	-.0795						
.400				-.7389	-1.0010		-1.0240
.402			-.6367				
.497	.0000						
.550				-.4209	-.5843		
.565			.0000				
.600							-.6178
.650						-.4833	
.700	-.2468				-.2211		
.725				-.3109			
.750						-.2285	-.4634
.760			-.2633				
.775				-.0578	-.0149		
.800			-.0792				
.834	-.2830						
.850				-.0103	.0138	-.0066	
.857			-.1357				
.865	-.1899						
.900	-.0756			-.0007			-.3158
.905			-.0268		.0307		
.950				-.0002		-.0066	
.953			-.0317				
.965	-.0500						

ARC11-716 IA14 O1+T12+S1EN25+A710 UPPER WING (RB1U31)

ALPHAO(8) = 4.030 BETAO (8) = 4.030

SECTION (1)UPPER WING DEPENDENT VARIABLE CP

X/CW \ Y/BW	.2990	.3640	.4270	.5340	.6730	.7800	.8870
.000	-.2055	-.1022	.1481	.4678	.4110	.3383	.3094
.020				-.0575	-.0310	-.2733	-.4022
.025			-.0609				
.040		.0134					
.045			-.1258				
.050	-.0887			-.2881	-.4075	-.4826	-.6496
.060				-.4553			
.065			-.2478				
.086		.0179					
.094	-.0609						
.150				-.6258	-.7430	-.7723	-.8200
.163		.0000					
.177			-.4062				
.193		-.1304					
.229	.0159						
.250				-.6610	-.7798	-.9145	-.9764
.274			-.4827				
.339		-.4008					
.362	-.0809						
.400				-.6170	-.8801		-1.0500
.402			-.5388				
.497	.0000						
.550				-.4414	-.5922		
.565			.0000				
.600							-.6346
.650						-.4694	
.700	-.2068				-.2364		
.725				-.3824			
.750						-.1160	-.4043
.760			-.3118				
.775				-.1910	-.0345		
.800			-.1935				
.834	-.3067						
.850				-.0480	-.0025	-.0161	
.857			-.1252				
.865	-.2598						
.900	-.1602			-.0193			-.2347
.905			-.0809		.0132		
.950				-.0134		-.0105	
.955			-.0732				
.965	-.0974						

ARC11-716 IA14 O1+T12+S12N25+AT10 UPPER WING (R01U31)

ALPHAO(8) = 4.020 BETAO (9) = 6.070

SECTION (1)UPPER WING DEPENDENT VARIABLE CP

Y/BW	.2990	.3640	.4270	.5340	.6730	.7800	.8870
X/CW							
.000	-.2626	-.0875	.0422	.3921	.3090	.3129	.2891
.020				-.0711	.0344	-.2502	-.3744
.025			-.1009				
.040		-.0182					
.045			-.1416				
.050	-.1296			-.2689	-.3780	-.4530	-.6120
.080				-.4201			
.085			-.2195				
.086		-.0144					
.094	-.1013						
.150				-.5467	-.6733	-.7194	-.7804
.163		.0000					
.177			-.3443				
.193		-.1312					
.229	-.0024						
.250				-.6023	-.7215	-.8380	-.9335
.274			-.4106				
.339		-.3445					
.362	-.0796						
.400				-.5287	-.7393		-1.0510
.402			-.4356				
.497	.0000						
.590				-.4610	-.6124		
.565			.0000				
.600							-.6056
.650						-.6096	
.700	-.2879				-.2393		
.725				-.3761			
.750						-.0637	-.2979
.760			-.3142				
.775				-.2280	-.1015		
.808			-.2163				
.834	-.3057						
.850				-.0931	-.0123	.0028	
.857			-.1495				
.885	-.2601						
.900	-.1884			-.0501			-.1219
.905			-.1133		.0212		
.950				-.0323		.0216	
.953			-.1006				
.965	-.1263						

ARC11-716 IA14 O1+T12+S12N25+AT10 UPPER WING (RB1U31)

ALPHAO(8) = 4.010 BETAO (10) = 0.100

SECTION (1)UPPER WING DEPENDENT VARIABLE CP

X/CW \ Y/BW	.2990	.3640	.4270	.5340	.6730	.7800	.8870
.000	-.2856	-.0665	.0024	.1972	.3713	.2902	.2688
.020				-.1416	-.0589	-.2210	-.3479
.025			-.0811				
.040		-.0246					
.045			-.1208				
.050	-.1599			-.2644	-.3415	-.4164	-.5795
.080				-.3638			
.085			-.1755				
.086		-.0207					
.094	-.1476						
.150				-.4548	-.6125	-.6655	-.7358
.163		.0000					
.177			-.2819				
.193		-.1268					
.229	-.0138						
.250				-.5152	-.6684	-.7722	-.8856
.274			-.3503				
.339		-.3061					
.362	-.0680						
.400				-.4633	-.6647		-1.0270
.402			-.3841				
.497	.0000						
.590				-.4522	-.6083		
.565			.0000				
.600							-.6022
.650						-.6813	
.700	-.2842				-.2646		
.725				-.3577			
.750						-.1532	-.2057
.760			-.3107				
.775				-.2549	-.1549		
.800			-.2422				
.834	-.3040						
.850				-.1314	-.0493	-.0044	
.857			-.1784				
.865	-.2047						
.900	-.2072			-.0981			-.0589
.905			-.1329		.0042		
.950				-.0812		.0259	
.955			-.1072				
.965	-.1474						

ARC11-716 IA14 O1+T12+S12N25+AT10 UPPER WING (RB1US1)

ALPHAO(8) = 4.000 BETAO (11) = 10.130

SECTION (1)UPPER WING DEPENDENT VARIABLE CP

Y/BW	.2990	.3640	.4270	.5340	.6730	.7800	.8870
X/CW							
.000	-.3218	-.0631	-.0296	.0972	.2994	.2748	.2587
.020				-.1636	-.0014	-.1741	-.2604
.025			-.0696				
.040		-.0410					
.045			-.1034				
.050	-.1013			-.2404	-.3000	-.3568	-.5054
.060				-.3087			
.065			-.1621				
.066		-.0366					
.094	-.1008						
.150				-.3648	-.5226	-.5897	-.6734
.163		.0000					
.177			-.2545				
.193		-.1039					
.229	-.0142						
.250				-.4179	-.5849	-.7170	-.8249
.274			-.3157				
.339		-.2703					
.362	-.0609						
.400				-.4135	-.6106		-.9501
.402			-.3601				
.497	.0000						
.550				-.4394	-.5901		
.565			.0000				
.600							-.7521
.650						-.6781	
.700	-.2076				-.2558		
.725				-.3551			
.750						-.1315	-.1202
.760			-.3230				
.775				-.3017	-.2041		
.800			-.2555				
.834	-.3190						
.850				-.1791	-.0975	-.0219	
.857			-.2044				
.865	-.2997						
.900	-.2374			-.1323			.0066
.905			-.1511		-.0327		
.950				-.0060		.0162	
.953			-.1373				
.965	-.1764						

ARC11-716 IA14 O1+T12+S12N25+AT10 UPPER WING (R01U31)

ALPHAO(9) = 6.000 BETAO (1) = -9.980

SECTION (1)UPPER WING DEPENDENT VARIABLE CP

Y/BW	.2990	.3640	.4270	.5340	.6730	.7800	.8870
X/CW							
.000	.0326	.0920	.4631	.6705	.6040	.5074	.4529
.020				-.2010	-.1315	-.4395	-.5499
.025			-.0743				
.040		.1120					
.045			-.2298				
.050	-.0424			-.4870	-.6061	-.6644	-.8381
.060				-.6930			
.085			-.4617				
.086		.0754					
.094	-.0217						
.150				-.9758	-1.0120	-1.0130	-.8700
.163		.0000					
.177			-.6642				
.193		-.2521					
.229	.0708						
.250				-1.0460	-1.0960	-.8543	-.7776
.274			-.7655				
.339		-.6314					
.362	-.1042						
.400				-.9092	-.8465		-.5768
.402			-.9173				
.497	.0000						
.550				-.4203	-.5818		
.565			.0000				
.600							-.5064
.650						-.5538	
.700	-.1131				-.2131		
.725				-.1647			
.750						-.4637	-.4385
.760			-.0439				
.775				-.0755	-.3722		
.806			.0870				
.834	.0318						
.850				-.0116	-.2971	-.3817	
.857			.0769				
.865	.1472						
.900	.1101			.0202			-.4072
.905			.0799		-.1888		
.950				.0420		-.3368	
.955			.0580				
.965	.0397						

ARC11-716 IA14 O6+T12+S12N25+AT10 UPPER WING (RB1US1)

ALPHAO(9) = 5.930 BETAO (2) = -7.900

SECTION (1)UPPER WING DEPENDENT VARIABLE CP

X/CW \ Y/BW	.2990	.3640	.4270	.5340	.6730	.7800	.8870
.000	-.0040	.0581	.4393	.6484	.5082	.4030	.4219
.020				-.1944	-.2220	-.4502	-.5582
.025			-.0691				
.040		.1010					
.045			-.2207				
.050	-.0651			-.4739	-.6039	-.6722	-.8555
.060				-.6884			
.065			-.4491				
.086		.0657					
.094	-.0311						
.150				-.8465	-1.0170	-1.0130	-.9436
.163		.0000					
.177			-.6374				
.193		-.2452					
.229	.0615						
.250				-1.0120	-1.1390	-.8488	-.8481
.274			-.7496				
.339		-.6229					
.362	-.1066						
.400				-.9545	-.8044		-.5895
.402			-.8945				
.497	.0000						
.550				-.2910	-.5736		
.565			.0000				
.600							-.5061
.650						-.5951	
.700	-.1076				-.2086		
.725				-.1471			
.750						-.4839	-.3920
.760			-.0716				
.775				-.0795	-.3599		
.800			.0519				
.834	.0094						
.850				-.0120	-.2516	-.3742	
.857			.0023				
.865	.1235						
.900	.0987			.0176			-.3057
.905			.0709		-.1160		
.950				.0290		-.2751	
.953			.0495				
.965	.0357						

ARC11-716 IA14 O1+T12+S12N25+AT10 UPPER WING (RB1US1)

ALPHAO(9) = 5.980 BETAO (3) = -5.980

SECTION (1)UPPER WING DEPENDENT VARIABLE CP

Y/BW	.2990	.3640	.4270	.5340	.6730	.7800	.8870
X/CW							
.000	-.0376	.0319	.4192	.6243	.5666	.4590	.3892
.020				-.1668	-.0862	-.4421	-.5709
.025			-.0592				
.040		.0913					
.045			-.2036				
.050	-.0801			-.4480	-.5862	-.6637	-.8534
.060				-.6498			
.065			-.4175				
.066		.0610					
.094	-.0455						
.150				-.8974	-.9939	-.9991	-.8741
.163		.0000					
.177			-.6045				
.193		-.2328					
.229	.0527						
.250				-.9716	-1.1160	-.9934	-.8157
.274			-.7201				
.339		-.6029					
.362	-.1048						
.400				-.9909	-.8540		-.6162
.402			-.8082				
.497	.0000						
.550				-.2974	-.5547		
.565			.0000				
.600							-.5150
.650						-.5802	
.700	-.1510				-.2013		
.725				-.1486			
.750						-.4862	-.4685
.760			-.0836				
.775				-.0672	-.3703		
.808			.0439				
.834	-.0184						
.850				-.0175	-.2594	-.3994	
.857			.0302				
.865	.0964						
.900	.0748			.0131			-.4348
.905			.0419		-.1326		
.950				.0212		-.3222	
.953			.0301				
.965	.0189						

ARC11-716 IA14 OL+T12+S12N25+AT10 UPPER WING (RB1U31)

ALPHAO(9) = 5.990 BETAO (6) = -3.970

SECTION (1)UPPER WING DEPENDENT VARIABLE CP

Y/BW	.2990	.3640	.4270	.5340	.6730	.7800	.8870
X/CW							
.000	-.0765	-.0015	.3929	.5976	.5289	.4256	.3560
.020				-.1565	-.1910	-.4464	-.5886
.025			-.0485				
.040		.0864					
.045			-.1912				
.050	-.0886			-.4301	-.5844	-.6575	-.8696
.080				-.6248			
.085			-.3963				
.086		.0804					
.094	-.0451						
.150				-.8573	-.9840	-.9947	-.9043
.163		.0000					
.177			-.5786				
.193		-.2195					
.229	.0478						
.250				-.9435	-1.1050	-1.0670	-.8310
.274			-.6841				
.339		-.5847					
.362	-.0909						
.400				-.9986	-.8465		-.6270
.402			-.8400				
.497	.0000						
.550				-.2503	-.5268		
.565			.0000				
.600							-.5193
.650						-.5853	
.700	-.1794				-.1905		
.725				-.1386			
.750						-.4779	-.4751
.760			-.0948				
.775				-.0567	-.3282		
.808			.0289				
.834	-.0322						
.850				-.0170	-.2059	-.3822	
.857			.0173				
.865	.0637						
.900	.0510			.0159			-.4189
.905			.0254		-.0830		
.950				.0258		-.2755	
.953			.0117				
.965	.0030						

ARC11-716 IA14 O1+T12+S12N25+AT10 UPPER WING (RB1U31)

ALPHAO(9) = 5.940 BETAO (5) = -1.960

SECTION (1)UPPER WING DEPENDENT VARIABLE CP

Y/BW	.2990	.3640	.4270	.5340	.6730	.7800	.8870
X/CW							
.000	-.1237	-.0372	.3533	.5686	.5039	.4002	.3367
.020				-.1507	-.1003	-.4327	-.5761
.025			-.0490				
.040		.0661					
.045			-.1807				
.050	-.0906			-.4145	-.5662	-.6476	-.8627
.080				-.6112			
.085			-.3794				
.086		.0540					
.094	-.0564						
.150				-.8252	-.9559	-.9774	-.9242
.163		.0000					
.177			-.5565				
.193		-.2095					
.229	.0423						
.250				-.8878	-1.0730	-1.0810	-.8718
.274			-.6718				
.339		-.5681					
.362	-.0999						
.400				-.9657	-.9494		-.6669
.402			-.8189				
.497	.0000						
.550				-.2316	-.5416		
.565			.0000				
.600							-.5495
.650						-.5922	
.700	-.1990				-.1934		
.725				-.1626			
.750						-.4716	-.5005
.760			-.1098				
.775				-.0662	-.3273		
.800			.0023				
.834	-.0852						
.850				-.0360	-.1932	-.3062	
.857			.0029				
.865	.0290						
.900	.0300			-.0002			-.4222
.905			.0129		-.0454		
.950				.0174		-.2767	
.953			.0004				
.965	-.0061						

ARC11-716 IA14 O1+T12+S12N25+AT10 UPPER WING (RB1U31)

ALPHAO(9) = 5.940 BETAO (6) = .040

SECTION (1)UPPER WING DEPENDENT VARIABLE CP

Y/BW	.2990	.3640	.4270	.5340	.6730	.7800	.8870
X/CW							
.000	-.1836	-.0913	.3106	.5310	.4739	.3689	.3037
.020				-.1413	-.1819	-.4236	-.5719
.025			-.0555				
.040		.0433					
.045			-.1816				
.050	-.1064			-.3837	-.5559	-.6244	-.8434
.060				-.5875			
.085			-.3494				
.086		.0399					
.094	-.0624						
.150				-.7775	-.9259	-.9443	-.9431
.153		.0000					
.177			-.5243				
.193		-.2038					
.229	.0333						
.250				-.8837	-1.0300	-1.0690	-.9030
.274			-.6346				
.339		-.5473					
.362	-.0997						
.400				-.9663	-1.0670		-.7279
.402			-.7770				
.497	.0000						
.550				-.3203	-.5385		
.565			.0000				
.600							-.5747
.650						-.6008	
.700	-.2992				-.2071		
.725				-.2234			
.750						-.4795	-.5240
.760			-.1683				
.775				-.0975	-.2960		
.808			-.0343				
.834	-.1530						
.850				-.0711	-.1658	-.3691	
.857			-.0263				
.865	-.0224						
.900	-.0073			-.0432			-.4439
.905			-.0151		-.0379		
.950				-.0351		-.2634	
.953			-.0210				
.965	-.0300						

ARC11-716 IA14 O1+T12+S12N25+AT10 UPPER WING (RB1U31)

ALPHAO(9) = 5.000 BETAO (7) = 2.000

SECTION (1)UPPER WING DEPENDENT VARIABLE CP

Y/BW	.2990	.3640	.4270	.5340	.6730	.7800	.8870
X/CW							
.000	-.2275	-.1566	.2420	.4846	.4414	.3309	.2674
.020				-.1485	-.0871	-.4174	-.5384
.025			-.0886				
.040		.0061					
.045			-.1887				
.050	-.1146			-.3912	-.5385	-.6175	-.8478
.080				-.5684			
.085			-.3369				
.086		.0169					
.094	-.0673						
.150				-.7476	-.8968	-.9243	-.9774
.163		.0000					
.177			-.5037				
.193		-.1920					
.229	.0186						
.250				-.7990	-.9821	-1.0060	-.9453
.274			-.5942				
.339		-.3159					
.362	-.1014						
.400				-.8526	-1.0870		-.8024
.452			-.7310				
.497	.0000						
.550				-.4180	-.4761		
.565			.0000				
.600							-.6270
.650						-.6070	
.700	-.2785				-.2340		
.725				-.2572			
.750						-.4692	-.5606
.760			-.2304				
.775				-.1018	-.2276		
.808			-.0756				
.834	-.2360						
.850				-.0512	-.1072	-.3339	
.857			-.0530				
.865	-.0937						
.900	-.0448			-.0332			-.4499
.905			-.0309		-.0214		
.950				-.0270		-.2119	
.953			-.0414				
.965	-.0557						

ARC11-716 IA14 O1+T12+S12N25+AT10 UPPER WING (RB1U31)

ALPHAO(9) = 5.990 BETAO (8) = 4.070

SECTION (1)UPPER WING DEPENDENT VARIABLE CP

Y/BW	.2990	.3640	.4270	.5340	.6730	.7800	.8870
X/CW							
.000	-.2749	-.1778	.1167	.4611	.4132	.2984	.2370
.020				-.1593	-.1974	-.4286	-.5836
.025			-.1352				
.040		-.0236					
.045			-.2081				
.050	-.1277			-.3889	-.5432	-.6214	-.8394
.060				-.5637			
.065			-.[illegible]9				
.080		-.0158					
.094	-.0871						
.150				-.7213	-.8883	-.9099	-.9733
.165		.0000					
.177			-.4808				
.193		-.1766					
.229	-.0035						
.250				-.7460	-.9429	-1.0660	-1.0040
.274			-.5527				
.339		-.4556					
.362	-.1099						
.400				-.7339	-1.0380		-.8782
.402			-.6149				
.497	.0000						
.550				-.4733	-.4918		
.565			.0000				
.600							-.6147
.650						-.5543	
.700	-.3031				-.2254		
.725				-.2912			
.750						-.4101	-.5455
.760			-.2413				
.775				-.0096	-.1401		
.808			-.1075				
.834	-.2504						
.850				-.0446	-.0617	-.2569	
.857			-.0676				
.865	-.1051						
.900	-.0903			-.0246			-.3990
.905			-.0495		-.0014		
.950				-.0246		-.1248	
.953			-.0544				
.965	-.0756						

ARC11-71S IA14 O1+T12+S12N25+AT10 UPPER WING (RB1US1)

ALPHAO(9) = 5.990 BETAO (9) = 6.100

SECTION (1)UPPER WING DEPENDENT VARIABLE CP

Y/BW	.2990	.3640	.4270	.5340	.6730	.7300	.8870
X/CW							
.000	-.3298	-.1381	-.0017	.3939	.3938	.2946	.2178
.020				-.1687	-.0972	-.3897	-.5603
.025			-.1662				
.040		-.0570					
.045			-.2102				
.050	-.1653			-.3663	-.5054	-.5808	-.7981
.080				-.5113			
.085			-.2060				
.086		-.0464					
.094	-.1415						
.190				-.6464	-.8326	-.8499	-.9242
.163		.0000					
.177			-.4031				
.193		-.1680					
.229	-.0240						
.250				-.6505	-.8309	-.9918	-1.0420
.274			-.4706				
.339		-.3906					
.362	-.1015						
.400				-.5735	-.8054		-.9876
.402			-.4962				
.437	.0000						
.550				-.4619	-.6583		
.565			.0000				
.600							-.6031
.650						-.4251	
.700	-.3809				-.2375		
.725				-.3125			
.750						-.2539	-.5541
.760			-.2958				
.775				-.1596	-.0730		
.800			-.2149				
.834	-.2906						
.850				-.0611	-.0304	-.1348	
.857			-.1389				
.865	-.2474						
.900	-.2763			-.0570			-.3663
.905			-.0994		-.0021		
.950				-.0378		-.0066	
.953			-.0029				
.965	-.1307						

ARC11-716 IA14 O1+T12+S12N25+AT10 UPPER WING (RB1U31)

ALPHAO(9) = 0.020 BETAO (10) = 0.130

SECTION (1)UPPER WING DEPENDENT VARIABLE CP

X/CW \ Y/BW	.2900	.3640	.4270	.5540	.6750	.7800	.8670
.000	-.3579	-.1134	-.0636	.1992	.3699	.2757	.2098
.020				-.2492	-.1649	-.3841	-.5408
.025			-.1904				
.040		-.0588					
.045			-.1829				
.050	-.2050			-.3689	-.4878	-.5561	-.7768
.060				-.4749			
.065			-.2349				
.084		-.0543					
.094	-.1904						
.120				-.5530	-.7582	-.8110	-.8861
.163		.0000					
.177			-.3318				
.193		-.1658					
.229	-.0552						
.250				-.5934	-.7599	-.9216	-1.0180
.274			-.3956				
.339		-.3502					
.362	-.0965						
.400				-.5174	-.7609		-1.0280
.402			-.4289				
.497	.0000						
.550				-.4749	-.6367		
.565			.0000				
.600							-.5229
.650						-.3673	
.700	-.3001				-.2287		
.725				-.3106			
.750						-.1060	-.4820
.760			-.2911				
.775				-.2063	-.0704		
.800			-.2295				
.834	-.2097						
.850				-.1129	-.0434	-.0659	
.857			-.1584				
.865	-.2447						
.900	-.1904			-.0773			-.2340
.905			-.1199		-.0039		
.950				-.0611		-.0319	
.953			-.1046				
.985	-.1442						

ARC11-716 IA14 O1+T12+S12N25+AT10 UPPER WING (RB1US1)

ALPHAO(9) = 5.990 BETAO (11) = 10.150

SECTION (11UPPER WING DEPENDENT VARIABLE CP

X/CW \ Y/BW	.2990	.3640	.4270	.5340	.6730	.7800	.8870
.000	-.3432	-.0965	-.0912	.0573	.3021	.2616	.2130
.020				-.2773	-.0899	-.3552	-.4870
.025			-.1239				
.040		-.0726					
.045			-.1599				
.050	-.2089			-.3465	-.4534	-.5037	-.7301
.080				-.4039			
.085			-.2087				
.086		-.0701					
.094	-.2049						
.150				-.4428	-.6547	-.7239	-.8196
.163		.0000					
.177			-.2981				
.193		-.1616					
.229	-.0534						
.250				-.4763	-.6644	-.8119	-.9600
.274			-.3503				
.339		-.3401					
.382	-.0855						
.400				-.4582	-.6703		-1.0180
.402			-.3966				
.497	.0000						
.550				-.4491	-.6103		
.565			.0000				
.600							-.5511
.650						-.5757	
.700	-.2921				-.2521		
.725				-.3300			
.750						-.0883	-.2686
.760			-.3190				
.775				-.2543	-.1427		
.800			-.2540				
.834	-.2962						
.850				-.1581	-.0788	-.0079	
.857			-.2013				
.867	-.2648						
.900	-.2170			-.1263			-.0938
.905			-.1423		-.0329		
.930				-.0935		.0056	
.953			-.1194				
.965	-.1659						

ARC11-716 IA14 OL+T12+S12N25+AT10 UPPER WING (RB1U31)

ALPHAO(10) = 8.850 BETAO (1) = -9.970

SECTION (1)UPPER WING DEPENDENT VARIABLE CP

Y/BW	.2990	.3640	.4270	.5840	.6730	.7800	.8870
X/CW							
.000	.0003	.0306	.4541	.6560	.5828	.4371	.3740
.020				-.3120	-.3485	-.5838	-.7119
.025			-.1565				
.040		.0066					
.045			-.3232				
.050	-.0741			-.5890	-.7180	-.7786	-.9362
.060				-.7914			
.065			-.3457				
.086		.0244					
.094	-.0446						
.150				-1.0760	-1.1040	-1.1010	-.7310
.163		.0000					
.177			-.7420				
.193		-.3217					
.229	.0535						
.250				-1.0360	-1.1360	-.6698	-.5758
.274			-.0289				
.339		-.6833					
.362	-.1327						
.400				-.8092	-.6819		-.5639
.402			-.0347				
.497	.0000						
.550				-.5353	-.6069		
.565			.0000				
.600							-.5204
.650						-.5996	
.700	-.1307				-.2305		
.725				-.3814			
.750						-.5255	-.4444
.760			-.1234				
.775				-.3618	-.4867		
.800			-.0013				
.834	-.0265						
.850				-.2476	-.4244	-.4467	
.857			.0242				
.865	.0732						
.900	.0625			-.1573			-.3792
.905			.0401		-.3238		
.950				-.0573		-.3099	
.953			.0237				
.965	.0232						

ARC11-716 IA14 O1+T12+S12N25+AT10 UPPER WING (RB1U31)

ALPHAO(10) = 8.000 BETAO (2) = -7.950

SECTION (1)UPPER WING DEPENDENT VARIABLE CP

X/CW \ Y/BW	.2990	.3640	.4270	.5340	.6730	.7800	.8870
.000	-.0407	-.0027	.4159	.6354	.5452	.4133	.3413
.020				-.3067	-.3456	-.5919	-.7278
.025			-.1502				
.040		.0469					
.045			-.3081				
.050	-.1003			-.5717	-.7149	-.7799	-1.0100
.060				-.7743			
.065			-.5222				
.086		.0136					
.094	-.0615						
.150				-1.0520	-1.0930	-1.1060	-.9888
.163		.0000					
.177			-.7124				
.193		-.3192					
.229	.0447						
.250				-1.1470	-1.1190	-1.0270	-.8426
.274			-.8103				
.339		-.6658					
.362	-.1329						
.400				-.9232	-.8673		-.5798
.402			-.9571				
.497	.0080						
.550				-.5763	-.6071		
.565			.0000				
.600							-.5195
.650						-.6126	
.700	-.1758				-.2029		
.725				-.3279			
.750						-.4659	-.4702
.760			-.0794				
.775				-.2337	-.4352		
.800			.0472				
.834	-.0168						
.850				-.1177	-.4171	-.4467	
.857			.0329				
.865	.0906						
.900	.0751			-.1187			-.3876
.905			.0378		-.2892		
.930				.0036		-.3838	
.953			.0216				
.965	.0054						

ARC11-716 IA14 O1+T12+S12N25+AT10 UPPER WING (RB1U31)

ALPHAO(18) = 7.900 BETAO (3) = -5.950

SECTION (1)UPPER WING DEPENDENT VARIABLE CP

X/CW \ T/BW	.2990	.3640	.4270	.5340	.6730	.7000	.8070
.000	-.0673	-.0450	.3857	.6152	.5227	.3904	.3101
.020				-.2095	-.3421	-.5982	-.7530
.025			-.1494				
.040		.0305					
.045			-.3009				
.050	-.1194			-.5563	-.7098	-.7885	-1.0150
.080				-.7562			
.085			-.4952				
.086		.0111					
.094	-.0782						
.150				-1.0200	-1.0900	-1.1010	-1.0110
.163		.0000					
.177			-.6758				
.193		-.2932					
.229	.0360						
.250				-1.1060	-1.1540	-1.0440	-.9279
.274			-.7764				
.339		-.6531					
.362	-.1322						
.400				-1.0370	-.8779		-.5847
.402			-.9207				
.497	.0000						
.550				-.5046	-.5984		
.565			.0000				
.600							-.5455
.650						-.5432	
.700	-.1949				-.2017		
.725				-.2758			
.750						-.4756	-.5046
.760			-.0095				
.775				-.1764	-.4350		
.808			.0305				
.834	-.0426						
.850				-.0823	-.3533	-.4452	
.857			.0212				
.865	.0606						
.900	.0584			-.0266			-.4688
.905			.0271		-.2500		
.950				.0045		-.3809	
.955			.0163				
.965	.0148						

ARC11-716 IA14 O1+T12+S12N25+AT10 UPPER WING (RB1US1)

ALPHAO(10) = 7.940 BETAO (4) = -3.970

SECTION (1)UPPER WING DEPENDENT VARIABLE CP

Y/BW	.2990	.3640	.4270	.5340	.6730	.7800	.8870
X/CW							
.000	-.1323	-.0939	.3469	.5686	.4960	.3668	.2808
.020				-.2733	-.3418	-.5939	-.7540
.025			-.1462				
.040		.0169					
.045			-.2965				
.050	-.1380			-.5374	-.6941	-.7799	-1.0200
.080				-.7335			
.085			-.4889				
.086		.0005					
.094	-.1892						
.150				-.9733	-1.0750	-1.0840	-1.0350
.163		.0000					
.177			-.6451				
.193		-.2056					
.229	.0253						
.250				-1.0360	-1.1040	-1.0350	-.9772
.274			-.7522				
.339		-.6314					
.362	-.1296						
.400				-1.0710	-.8698		-.5868
.452			-.8953				
.497	.0000						
.550				-.4068	-.6621		
.565			.0000				
.600							-.5647
.650						-.3632	
.700	-.2141				-.2086		
.725				-.2466			
.750						-.4026	-.5323
.760			-.1346				
.775				-.1545	-.4198		
.800			-.0116				
.834	-.0833						
.850				-.0758	-.3226	-.4359	
.857			-.0015				
.865	.0300						
.900	.0428			-.0453			-.4987
.905			.0061		-.2104		
.950				-.0118		-.3748	
.953			.0088				
.965	.0009						

ARC11-716 IA14 O6+T12+S12N25+AT10 UPPER WING (RB1US1)

ALPHAO(10) = 7.940 BETAO (5) = -1.980

SECTION (1)UPPER WING DEPENDENT VARIABLE CP

X/CW \ Y/BW	.2990	.3640	.4270	.5340	.6730	.7800	.8670
.000	-.1798	-.1444	.3126	.5416	.4659	.3406	.2499
.020				-.2605	-.3390	-.5867	-.7619
.025			-.1428				
.040		.0089					
.045			-.2798				
.050	-.1511			-.5132	-.6742	-.7725	-1.0170
.080				-.7046			
.085			-.4640				
.086		.0040					
.094	-.0979						
.150				-.9176	-1.0540	-1.0720	-1.0480
.163		.0000					
.177			-.6128				
.193		-.2670					
.229	.0212						
.250				-.9739	-1.1610	-1.0070	-.9931
.274			-.7220				
.339		-.6069					
.362	-.1258						
.400				-1.0210	-.8526		-.5959
.402			-.8614				
.497	.0000						
.550				-.3423	-.6754		
.565			.0000				
.600							-.5818
.650						-.5427	
.700	-.2507				-.2015		
.725				-.2064			
.750						-.4740	-.5411
.760			-.1487				
.775				-.1372	-.4061		
.808			-.0221				
.834	-.1125						
.850				-.0830	-.3037	-.4248	
.857			-.0146				
.885	.0089						
.900	.0215			-.0393			-.5040
.905			-.0006		-.1612		
.950				-.0084		-.3633	
.953			-.0090				
.985	-.0090						

ARC11-716 IA14 O1+T12+S12N25+AT10 UPPER WING (RB1U51)

ALPHAO(10) = 7.890 BETAO (6) = .030

SECTION (1)UPPER WING DEPENDENT VARIABLE CP

Y/BW	.2990	.3640	.4270	.5340	.6730	.7800	.8870
X/CW							
.000	-.2153	-.1612	.2766	.5097	.4145	.2999	.2221
.020				-.2367	-.3325	-.5869	-.7634
.025			-.1320				
.040		-.0013					
.045			-.2517				
.050	-.1538			-.4913	-.6583	-.7650	-1.0090
.060				-.6793			
.085			-.4413				
.086		-.0006					
.094	-.0985						
.150				-.8823	-1.0280	-1.0640	-1.0600
.163		.0000					
.177			-.5840				
.193		-.2424					
.229	.0164						
.250				-.9268	-1.1310	-1.0590	-1.0130
.274			-.6861				
.339		-.5886					
.362	-.1242						
.400				-.9856	-.9081		-.6087
.402			-.6325				
.497	.0000						
.550				-.3220	-.6533		
.565			.0000				
.600							-.8827
.650						-.5468	
.700	-.2716				-.1970		
.725				-.2108			
.750						-.4554	-.5561
.760			-.1745				
.775				-.1035	-.3464		
.808			-.0484				
.834	-.1482						
.850				-.0830	-.2353	-.3878	
.857			-.0380				
.865	-.0143						
.900	.0080			-.0518			-.3041
.905			-.0183		-.1106		
.950				-.0212		-.3097	
.953			-.0176				
.965	-.0185						

ARC11-716 IA14 O1+T12+S12N25+AT10 UPPER WING (RB11'31)

ALPHAO(10) = 7.940 BETAO (7) = 2.060

SECTION (1)UPPER WING DEPENDENT VARIABLE CP

Y/BW	.2990	.3640	.4270	.5340	.6730	.7800	.8870
X/CW							
.000	-.2987	-.2473	.2050	.4588	.3922	.2570	.1809
.020				-.2431	-.3197	-.5763	-.7701
.025			-.1639				
.040		-.0390					
.045			-.2090				
.050	-.1635			-.4776	-.6378	-.7457	-1.0120
.060				-.6516			
.085			-.4220				
.086		-.0293					
.094	-.1082						
.150				-.8356	-.9920	-1.0400	-1.0640
.163		.0000					
.177			-.5629				
.193		-.2371					
.229	-.0061						
.250				-.8709	-1.0960	-1.0400	-1.0220
.274			-.6544				
.339		-.5583					
.362	-.1278						
.400				-.9280	-.9677		-.6055
.402			-.7834				
.497	.0000						
.550				-.3167	-.6336		
.565			.0000				
.600							-.6210
.650						-.5388	
.700	-.3221				-.2245		
.725				-.2423			
.750						-.4539	-.5890
.760			-.2213				
.775				-.1306	-.3407		
.800			-.0794				
.834	-.2081						
.850				-.0907	-.2302	-.3870	
.857			-.0636				
.865	-.0943						
.900	-.0661			-.0651			-.3287
.905			-.0525		-.1027		
.950				-.0526		-.3122	
.953			-.0525				
.965	-.0606						

ARC11-716 IA14 O1+T12+S12N25+AT10 UPPER WING (RB1U31)

ALPHAO(10) = 8.010 BETAO (8) = 4.090

SECTION (1)UPPER WING DEPENDENT VARIABLE CP

Y/BW	.2990	.3640	.4270	.5340	.6730	.7800	.8870
X/CW							
.000	-.3680	-.2562	.0716	.4316	.3943	.2207	.1432
.020				-.2517	-.3222	-.5747	-.7716
.025			-.2107				
.040		-.0717					
.045			-.2828				
.050	-.1803			-.4721	-.6419	-.7376	-1.0030
.060				-.6368			
.085			-.3944				
.086		-.0601					
.094	-.1326						
.150				-.8049	-.9834	-1.0200	-1.0500
.163		.0000					
.177			-.5317				
.193		-.2135					
.229	-.0331						
.250				-.8223	-1.0650	-1.0500	-1.0190
.274			-.6070				
.339		-.4965					
.362	-.1368						
.400				-.8366	-1.0130		-.6036
.402			-.6910				
.497	.0000						
.550				-.4010	-.5443		
.565			.0000				
.600							-.6145
.650						-.5101	
.700	-.3262				-.2149		
.725				-.2478			
.750						-.4108	-.5683
.760			-.2410				
.775				-.1079	-.2536		
.808			-.1229				
.834	-.2284						
.850				-.0754	-.1647	-.3403	
.857			-.0932				
.865	-.1341						
.900	-.1012			-.0508			-.5080
.905			-.0720		-.0*03		
.950				-.0371		-.2570	
.953			-.0691				
.965	-.0877						

ARC11-716 IA14 O4+T12+S12N25+AT10 UPPER WING (RB1U31)

ALPHAO(10) = 8.000 BETAO (9) = 6.120

SECTION (1)UPPER WING DEPENDENT VARIABLE CP

Y/BW	.2990	.3640	.4170	.5340	.6730	.7800	.8890
X/CW							
.000	-.4207	-.1872	-.0519	.3525	.3769	.2198	.1122
.020				-.2818	-.3117	-.5475	-.7668
.025			-.2468				
.040		-.1060					
.045			-.2885				
.050	-.2128			-.4734	-.6287	-.7137	-.9901
.080				-.6211			
.085			-.3631				
.086		-.0961					
.094	-.1975						
.150				-.7473	-.9596	-1.0010	-1.0720
.163		.0000					
.177			-.4887				
.193		-.2187					
.229	-.0006						
.250				-.7551	-.9969	-1.1320	-1.0490
.274			-.5100				
.339		-.4404					
.362	-.1382						
.400				-.6778	-1.0530		-.6389
.402			-.5597				
.497	.0000						
.550				-.4947	-.476[illegible]		
.565			.0000				
.600							-.6516
.650						-.4595	
.700	-.3254				-.2205		
.725				-.2419			
.750						-.3540	-.6043
.760			-.2436				
.775				-.1472	-.1534		
.800			-.1904				
.834	-.2474						
.850				-.1023	-.1071	-.2512	
.857			-.1145				
.865	-.1730						
.900	-.1327			-.0807			-.468[illegible]
.905			-.0989		-.0339		
.950				-.0536		-.1635	
.953			-.0882				
.965	-.1119						

ARC11-716 IA14 O1+T12+S12N25+AT10 UPPER WING (RB1U31)

ALPHAO(10) = 7.980 BETAO (10) = 8.120

SECTION (1)UPPER WING DEPENDENT VARIABLE CP

Y/BW	.2990	.3640	.4270	.5340	.6730	.7800	.8870
X/CW							
.000	-.4156	-.1561	-.1343	.1509	.3422	.2364	.1304
.020				-.3714	-.2323	-.5238	-.7387
.025			-.2221				
.040		-.1026					
.045			-.2464				
.050	-.2905			-.4704	-.6118	-.6951	-.9574
.080				-.3759			
.085			-.2948				
.086		-.1004					
.094	-.2517						
.150				-.6402	-.8957	-.9593	-1.0410
.163		.0000					
.177			-.3915				
.193		-.2132					
.229	-.1245						
.250				-.6612	-.8835	-1.0760	-1.1160
.274			-.4524				
.339		-.4041					
.362	-.1361						
.400				-.5607	-.8530		-.9059
.402			-.4771				
.497	.0000						
.550				-.4822	-.6389		
.565			.0000				
.600							-.6737
.650						-.3864	
.700	-.3167				-.2164		
.725				-.2510			
.750						-.2392	-.5827
.760			-.2587				
.775				-.1617	-.0997		
.808			-.1939				
.834	-.2517						
.850				-.1053	-.0769	-.1319	
.857			-.1594				
.865	-.2058						
.900	-.1606			-.0856			-.3957
.905			-.1302		-.0306		
.930				-.0654		-.0775	
.953			-.1083				
.965	-.1240						

ARC11-716 IA14 O1+T12+S12N25+AT10 UPPER WING (RB1U31)

ALPHAO(1B) = 7.990 BETAO (11) = 10.200

SECTION (1)UPPER WING DEPENDENT VARIABLE CP

Y/BW	.2990	.3640	.4270	.5840	.6750	.7880	.8870
X/CW							
.000	-.3986	-.1510	-.1951	-.0971	.2864	.2270	.1415
.020				-.4639	-.3081	-.5066	-.6812
.025			-.2077				
.040		-.1420					
.045			-.2433				
.050	-.2752			-.4800	-.6238	-.6689	-.9032
.080				-.5379			
.085			-.2878				
.086		-.1254					
.094	-.2757						
.150				-.5359	-.8394	-.9104	-1.0000
.163		.0000					
.177			-.3740				
.193		-.2697					
.229	-.1362						
.250				-.5441	-.7922	-.9955	-1.0930
.274			-.4286				
.339		-.4120					
.362	-.1271						
.400				-.4906	-.7443		-1.0500
.402			-.4632				
.497	.0000						
.550				-.4512	-.6072		
.565			.0000				
.600							-.6660
.650						-.3093	
.700	-.3066				-.2363		
.723				-.2765			
.750						-.1632	-.5182
.780			-.2816				
.775				-.2174	-.1200		
.808			-.2030				
.834	-.2621						
.850				-.1490	-.0721	-.1082	
.857			-.1669				
.865	-.2162						
.900	-.1774			-.1188			-.2398
.915			-.1342		-.0296		
.950				-.1007		-.0234	
.953			-.1221				
.965	-.1313						

ARC11-716 IA14 O1+T12+S12N25+AT10 UPPER WING (RB1U31)

ALPHAO(11) = 9.990 BETAO (1) = -9.930

SECTION (1)UPPER WING DEPENDENT VARIABLE CP

X/CW \ Y/BW	.2990	.3640	.4270	.5340	.6730	.7800	.8670
.000	-.0003	.0365	.4621	.6655	.5288	.3670	.2893
.020				-.3937	-.4310	-.7162	-.8518
.025			-.1989				
.040		.0458					
.045			-.3789				
.050	-.0882			-.6553	-.8152	-.8957	-1.0140
.080				-.8582			
.085			-.6211				
.088		-.0028					
.094	-.0575						
.120				-1.1060	-1.1740	-1.0940	-.9096
.163		.0000					
.177			-.6060				
.193		-.3799					
.229	.0903						
.250				-1.1300	-1.0740	-.7810	-.6742
.274			-.8734				
.339		-.7092					
.362	-.1430						
.400				-.9085	-.7397		-.5491
.402			-.8887				
.497	.0000						
.590				-.6430	-.6918		
.565			.0000				
.600							-.5159
.650						-.5900	
.700	-.2080				-.2407		
.725				-.5186			
.750						-.5495	-.4897
.760			-.1770				
.775				-.4815	-.5440		
.800			-.1584				
.834	-.0938						
.850				-.3778	-.5112	-.5222	
.897			-.1221				
.865	.0267						
.900	.0257			-.2954			-.4695
.905			-.0735		-.4419		
.950				-.2178		-.4935	
.953			-.0493				
.965	-.0154						

ARC11-716 IA14 OL+T12+S12N2S+AT10 UPPER WING (RB1US1)

ALPHAO(11) = 10.010 BETAO (2) = -7.910

SECTION (1)UPPER WING DEPENDENT VARIABLE CP

Y/BW	.2990	.3640	.4270	.5340	.6730	.7600	.8670
X/CW							
.000	-.0496	.0023	.4362	.6472	.9234	.3501	.2384
.020				-.3685	-.4471	-.7268	-.8767
.025			-.1894				
.040		.0317					
.045			-.3860				
.050	-.1131			-.6425	-.8114	-.9032	-1.0130
.080				-.8369			
.085			-.5865				
.086		-.0046					
.094	-.0774						
.1[illegible]				-1.1190	-1.1090	-1.0830	-.9142
.1[illegible]		.0000					
.177			-.7713				
.193		-.3353					
.229	.0415						
.250				-1.1040	-1.0700	-.7660	-.6796
.274			-.8579				
.339		-.6088					
.382	-.1387						
.400				-.8648	-.7902		-.5525
.402			-.8317				
.497	.0000						
.550				-.6192	-.6851		
.565			.0000				
.600							-.5212
.650						-.5981	
.700	-.1856				-.2258		
.725				-.4507			
.750						-.5496	-.4970
.760			-.1689				
.775				-.4090	-.5374		
.808			-.0490				
.834	-.1014						
.850				-.3014	-.4812	-.5172	
.857			-.0459				
.865	.0099						
.900	.0209			-.2145			-.4753
.905			-.0282		-.4237		
.950				-.1931		-.4921	
.955			-.0159				
.965	-.0124						

ARC11-716 IA14 O1+T12+S12N25+AT10 UPPER WING (RB1U31)

ALPHAO(11) = 9.920 BETAO (3) = -5.920

SECTION (1)UPPER WING DEPENDENT VARIABLE CP

Y/BW	.2990	.3640	.4270	.5340	.6730	.7600	.8870
X/CW							
.000	-.0995	-.0335	.4082	.6173	.5089	.3366	.2354
.020				-.3445	-.4351	-.7202	-.8826
.025			-.1790				
.040		.0289					
.045			-.3389				
.050	-.1410			-.6107	-.7941	-.8978	-1.0670
.080				-.8062			
.085			-.5480				
.086		-.0007					
.094	-.0857						
.150				-1.0850	-1.1540	-1.1600	-.9713
.163		.0000					
.177			-.7317				
.193		-.3292					
.229	.0355						
.250				-1.1200	-1.1090	-.8719	-.6755
.274			-.8229				
.339		-.6685					
.362	-.1336						
.400				-.8774	-.8161		-.5784
.402			-.9603				
.497	.0000						
.550				-.5965	-.6710		
.565			.0000				
.600							-.5491
.650						-.6252	
.700	-.1933				-.2211		
.725				-.4115			
.750						-.5725	-.5240
.760			-.1769				
.775				-.3620	-.5202		
.800			-.0418				
.834	-.1035						
.850				-.2336	-.4720	-.5311	
.857			-.0524				
.865	-.0018						
.900	-.0023			-.1580			-.5008
.905			-.0346		-.4035		
.950				-.1033		-.5021	
.953			-.0240				
.965	-.0287						

ARC11-718 IA14 OL+T12+S12N25+AT10 UPPER WING (RB1U31)

ALPHAO(11) = 9.940 BETAO (4) = -3.950

SECTION (1)UPPER WING DEPENDENT VARIABLE CP

Y/BW	.2990	.3640	.4270	.5340	.6730	.7800	.8970
X/CW							
.000	-.1470	-.0714	.3724	.6143	.4894	.3191	.2110
.020				-.3348	-.4291	-.7177	-.8923
.025			-.1842				
.040		.0076					
.045			-.3143				
.050	-.1539			-.5968	-.7841	-.8942	-1.0640
.060				-.7926			
.065			-.5139				
.086		-.0101					
.094	-.1042						
.150				-1.0560	-1.1400	-1.1750	-1.0080
.163		.0000					
.177			-.6900				
.193		-.3166					
.229	.0257						
.250				-1.0990	-1.1720	-.8833	-.6762
.274			-.7945				
.339		-.6546					
.362	-.1358						
.400				-.8759	-.8415		-.5860
.402			-.9360				
.497	.0000						
.550				-.5478	-.6687		
.565			.0000				
.600							-.5645
.650						-.6417	
.700	-.2011				-.2231		
.725				-.3656			
.750						-.5857	-.5441
.760			-.1837				
.775				-.3054	-.5207		
.808			-.0710				
.834	-.1200						
.850				-.1992	-.4627	-.5496	
.857			-.0630				
.865	-.0187						
.900	-.0169			-.1326			-.5150
.905			-.0495		-.3731		
.950				-.0750		-.5151	
.953			-.0416				
.965	-.0367						

ARC11-716 IA14 O1+T12+S12N25+AT10 UPPER WING (RB1U31)

A_PHAO(11) = 9.940 BETAO (5) = -1.960

SECTION (1)UPPER WING DEPENDENT VARIABLE CP

Y/BW	.2990	.3640	.4270	.5340	.6730	.7800	.8870
X/CW							
.000	-.2032	-.1338	.3295	.5798	.4424	.2936	.1886
.020				-.3105	-.4194	-.7122	-.8972
.025			-.1573				
.040		-.0100					
.045			-.2952				
.050	-.1774			-.5786	-.7673	-.8839	-1.0850
.080				-.7686			
.085			-.4875				
.086		-.0163					
.094	-.1190						
.150				-1.0100	-1.1200	-1.1690	-1.0120
.163		.0000					
.177			-.6519				
.193		-.2968					
.229	.0155						
.250				-1.0430	-1.1840	-.9017	-.7015
.274			-.7575				
.339		-.6279					
.362	-.1356						
.400				-1.0130	-.8470		-.6059
.402			-.9017				
.497	.0000						
.550				-.4740	-.6529		
.565			.0000				
.600							-.5798
.650						-.6528	
.700	-.2259				-.2216		
.725				-.3220			
.750						-.5958	-.5492
.760			-.1963				
.775				-.2529	-.5100		
.808			-.0890				
.834	-.1623						
.850				-.1698	-.4358	-.5561	
.857			-.0835				
.865	-.0490						
.900	-.0307			-.1145			-.5310
.905			-.0578		-.3371		
.950				-.0743		-.5045	
.953			-.0541				
.965	-.0497						

ARC11-716 IA14 O4+T12+B12NES+A710 UPPER WING (RB1U31)

ALPHAO(11) = 9.880 BETAO (6) = .040

SECTION (1)UPPER WING DEPENDENT VARIABLE CP

X/CW \ Y/BW	.2990	.3640	.4270	.5340	.6730	.7800	.8870
.000	-.2647	-.2020	.2650	.5012	.4472	.2606	.1569
.020				-.2954	-.3556	-.7207	-.8997
.025			-.1718				
.040		-.0291					
.045			-.3023				
.050	-.1846			-.5506	-.7574	-.8881	-1.1130
.060				-.7275			
.065			-.4770				
.066		-.0298					
.094	-.1184						
.150				-.9495	-1.1140	-1.1590	-1.0330
.163		.0000					
.177			-.6235				
.193		-.2842					
.229	.0013						
.250				-.9931	-1.1970	-.9926	-.7280
.274			-.7240				
.339		-.6063					
.362	-.1427						
.400				-1.0280	-.8765		-.6091
.402			-.8676				
.497	.0000						
.550				-.4148	-.6117		
.565			.0000				
.600							-.5985
.650						-.6420	
.700	-.2360				-.2137		
.725				-.2909			
.750						-.5836	-.5688
.760			-.1896				
.775				-.2119	-.4800		
.800			-.0899				
.834	-.1676						
.850				-.1453	-.3997	-.5450	
.857			-.0735				
.865	-.0516						
.900	-.0307			-.1014			-.5277
.905			-.0581		-.2841		
.950				-.0624		-.4868	
.955			-.0544				
.965	-.0555						

ARC11-716 IA14 O1+T12+S12N25+AT10 UPPER WING (RB1U31)

ALPHAO(11) = 9.980 BETAO (7) = 2.070

SECTION (1)UPPER WING DEPENDENT VARIABLE CP

Y/BW	.2990	.3640	.4270	.5340	.6730	.7800	.8870
X/CW							
.000	-.3648	-.3141	.1791	.4619	.4223	.2214	.1179
.020				-.3187	-.3728	-.7061	-.9175
.025			-.2179				
.040		-.0804					
.045			-.3333				
.050	-.1960			-.5505	-.7446	-.8685	-1.1420
.060				-.7258			
.085			-.4803				
.086		-.0582					
.094	-.1399						
.150				-.9200	-1.1010	-1.1430	-1.1070
.163		.0000					
.177			-.6107				
.193		-.2722					
.229	-.0244						
.250				-.9436	-1.1670	-1.0500	-.7516
.274			-.7021				
.339		-.5846					
.362	-.1582						
.400				-.9988	-.8753		-.6236
.402			-.8300				
.497	.0000						
.550				-.3993	-.6067		
.565			.0000				
.600							-.6325
.650						-.6510	
.700	-.3078				-.2255		
.725				-.2707			
.750						-.5850	-.5767
.760			-.2167				
.775				-.1765	-.4539		
.800			-.0976				
.834	-.1939						
.850				-.1313	-.3713	-.5250	
.857			-.0931				
.865	-.0794						
.900	-.0620			-.1066			-.5572
.905			-.0723		-.2380		
.950				-.0759		-.4494	
.953			-.0743				
.965	-.0762						

ARC11-716 IA14 O1+T12+S12N25+A710 UPPER WING (RB1U31)

ALPHAO(11) = 9.990 BETAO (8) = 4.110

SECTION (1)UPPER WING DEPENDENT VARIABLE CP

Y/BW	.2990	.3640	.4270	.5340	.6730	.7800	.8870
X/CW							
.000	-.4391	-.3462	.0435	.4165	.3729	.2131	.0724
.020				-.3377	-.4193	-.7110	-.9332
.025			-.2874				
.040		-.1087					
.045			-.3639				
.050	-.2214			-.5574	-.7422	-.8657	-1.1440
.080				-.7202			
.085			-.4730				
.086		-.0890					
.094	-.1674						
.150				-.9071	-1.0760	-1.1350	-1.1170
.163		.0000					
.177			-.5829				
.193		-.2503					
.229	-.0581						
.250				-.9057	-1.1550	-1.1150	-.7413
.274			-.6597				
.339		-.5415					
.362	-.1711						
.400				-.9353	-.8831		-.6376
.402			-.7597				
.497	.0000						
.550				-.3765	-.6323		
.565			.0000				
.600							-.6526
.650						-.6118	
.700	-.3421				-.2302		
.725				-.2954			
.750						-.5681	-.6096
.760			-.2405				
[illegible]				-.1896	-.4198		
[illegible]			-.1330				
.834	-.2251						
.850				-.1374	-.3275	-.4989	
.857			-.1198				
.865	-.1344						
.900	-.10[illegible]			-.1076			-.5724
.905			-.0949		-.2007		
.950				-.0805		-.4046	
[illegible]			-.0847				
.965	-.1007						

ARC11-716 IA14 O1+T12+312N25+AT10 UPPER WING (RB1U31)

ALPHAO(11) = 9.980 BETAO (9) = 6.130

SECTION (1)UPPER WING DEPENDENT VARIABLE CP

Y/BW	.2990	.3640	.4270	.5340	.6730	.7800	.8870
X/CW							
.000	-.4884	-.2273	-.0939	.3557	.3542	.2395	.1053
.020				-.3776	-.3048	-.6767	-.8876
.025			-.3153				
.040		-.1275					
.045			-.3568				
.050	-.2543			-.5620	-.7178	-.8338	-1.1140
.080				-.7050			
.085			-.4227				
.086		-.1150					
.094	-.2351						
.150				-.8401	-1.0490	-1.1100	-1.1510
.163		.0000					
.177			-.5245				
.193		-.2496					
.229	-.1069						
.250				-.8371	-1.1170	-1.1900	-.9009
.274			-.5837				
.339		-.4754					
.362	-.1791						
.400				-.7806	-1.0170		-.6425
.402			-.6102				
.497	.0000						
.550				-.4511	-.3437		
.565			.0000				
.600							-.6607
.650						-.5440	
.700	-.3391				-.2203		
.725				-.2822			
.750						-.4970	-.6196
.760			-.2541				
.775				-.1903	-.3147		
.800			-.1686				
.834	-.2805						
.850				-.1430	-.2050	-.4320	
.857			-.1445				
.865	-.1604						
.900	-.1372			-.1093			-.5738
.905			-.1170		-.1133		
.950				-.0805		-.3116	
.953			-.1155				
.965	-.1234						

ARC11-716 IA14 OL+T12+S12N25+AT10 UPPER WING (RB1U31)

ALPHAO(11) = 10.030 BETAO (10) = 8.170

SECTION (1)UPPER WING DEPENDENT VARIABLE CP

Y/BW	.2990	.3[illegible]8	.4270	.5340	.6750	.7800	.8870
X/CW							
.000	-.4691	-.1897	-.2167	.1550	.3436	.2167	.1163
.020				-.4840	-.3566	-.6503	-.8667
.025			-.2570				
.040		-.1401					
.045			-.2794				
.050	-.2847			-.5959	-.7020	-.8019	-1.0960
.080				-.6883			
.085			-.3279				
.086		-.1438					
.094	-.2679						
.150				-.7437	-1.0200	-1.0710	-1.1760
.163		.0000					
.177			-.4275				
.193		-.2778					
.229	-.1751						
.250				-.7292	-1.0250	-1.1850	-1.1070
.274			-.4873				
.339		-.4666					
.362	-.1806						
.400				-.6104	-.9975		-.6604
.402			-.5116				
.497	.0000						
.550				-.4765	-.4567		
.565			.0000				
.600							-.6751
.650						-.4659	
.700	-.3275				-.2204		
.725				-.2521			
.750						-.4139	-.6212
.760			-.2711				
.775				-.1888	-.2218		
.808			-.2066				
.834	-.2622						
.850				-.1361	-.1655	-.3311	
.857			-.1742				
.865	-.2028						
.900	-.1665			-.1098			-.5458
.905			-.1440		-.0857		
.950				-.0868		-.2251	
.953			-.1366				
.965	-.1486						

ARC11-716 IA14 O1+T12+S12N25+AT10 UPPER WING (RB1US1)

ALPHAO(11) = 10.050 BETAO (11) = 10.230

SECTION (1)UPPER WING DEPENDENT VARIABLE CP

Y/BW	.2990	.3640	.4270	.5340	.6730	.7800	.8870
X/CW							
.000	-.4477	-.2014	-.2902	-.0164	.3338	.2245	.1300
.020				-.5923	-.2629	-.5956	-.8168
.025			-.2429				
.040		-.1715					
.045			-.2731				
.050	-.3338			-.5997	-.6963	-.7542	-1.0600
.080				-.6513			
.085			-.3262				
.086		-.1760					
.094	-.3126						
.150				-.6404	-.9797	-1.0310	-1.1360
.163		.0000					
.177			-.3943				
.193		-.3254					
.229	-.2110						
.250				-.6181	-.9295	-1.1400	-1.1590
.274			-.4429				
.339		-.4696					
.362	-.1721						
.400				-.5235	-.8371		-.6764
.402			-.4791				
.497	.0000						
.550				-.4610	-.5425		
.565			.0000				
.600							-.6991
.650						-.4113	
.700	-.3201				-.2445		
.725				-.2646			
.750						-.3565	-.6433
.760			-.2959				
.775				-.2097	-.1936		
.808			-.2456				
.834	-.2444						
.850				-.1601	-.1230	-.2574	
.857			-.1853				
.865	-.1970						
.900	-.1671			-.1308			-.5005
.905			-.1517		-.0747		
.950				-.1197		-.1090	
.953			-.1385				
.965	-.1489						

ARC11-716 IA14 O1+T12+S12N25+AT10 UPPER WING (RB1U32) (17 APR 74)

REFERENCE DATA

SREF = 2.4210 SQ.FT. XMRP = 29.5800 INCHES
LREF = 30.7090 INCHES YMRP = .0000 INCHES
BREF = 30.7090 INCHES ZMRP = .0000 INCHES
SCALE = .0300 SCALE

PARAMETRIC DATA

MACH = 1.100 ELEVON = .000
RUDDER = .000 SPOBRK = .000

ALPHAO(1) = -10.240 BETAO (1) = -9.900

SECTION (1)UPPER WING DEPENDENT VARIABLE CP

Y/BW	.2990	.3640	.4270	.5340	.6730	.7800	.8870
X/CW							
.000	-.0993	-.0544	.3777	.5137	.4293	.3419	.3715
.020				.6798	.6328	.6582	.6516
.025			.5624				
.040		.1580					
.045			.5023				
.050	.0607			.4751	.4743	.4894	.4725
.060				.3057			
.065			.3707				
.066		.3543					
.094	.0513						
.150				.0575	.0994	.1468	.1470
.163		.0000					
.177			.1262				
.193		.2981					
.229	.1035						
.230				-.1222	-.1236	-.1066	-.1246
.274			-.0248				
.339		-.0074					
.362	.2434						
.400				.0852	.0270		-.3084
.402			-.0795				
.497	.0000						
.550				.1049	-.0295		
.565			.0000				
.600							-.2138
.650						-.1384	
.700	.2793				-.1249		
.725				.0974			
.750						.2819	.2053
.760			.1249				
.775				.3592	.3325		
.808			.3451				
.834	.2100						
.850				.3240	.3350	.3402	
.857			.3222				
.865	.3579						
.900	.3284			.3132			.3146
.905			.3020		.2858		

ARC11-716 IA14 O1+T12+S12N25+AT10 UPPER WING (RB1U32)

ALPHAO(1) = -10.240 BETAO (1) = -9.900

SECTION (1)UPPER WING DEPENDENT VARIABLE CP

X/CW \ Y/BW	.2990	.3640	.4270	.5340	.6730	.7800	.8870
.950				.2628		.2937	
.953			.2467				
.965	.2395						

ALPHAO(1) = -10.220 BETAO (2) = -7.890

SECTION (1)UPPER WING DEPENDENT VARIABLE CP

X/CW \ Y/BW	.2990	.3640	.4270	.5340	.6730	.7800	.8870
.000	-.1236	-.0936	.3474	.4779	.3801	.2855	.3103
.020				.6610	.6154	.6414	.6301
.025			.5352				
.040		.1157					
.045			.4819				
.050	.0290			.4681	.4732	.4905	.4713
.080				.3074			
.085			.3631				
.086		.3169					
.094	.0152						
.150				.0722	.1234	.1675	.1568
.163		.0000					
.177			.1328				
.193		.2867					
.229	.0831						
.253				-.1097	-.0855	-.0721	-.1005
.274			-.0063				
.339		.0067					
.362	.2273						
.400				.0527	-.0201		-.2209
.402			.0312				
.497	.0000						
.550				.0715	-.0469		
.565			.0000				
.600							-.2450
.650						-.1583	
.700	.2569				-.1448		
.725				.0149			
.750						.1611	.1209
.760			.0321				
.775				.3142	.2656		
.808			.3124				
.834	.1504						
.850				.2891	.3058	.3053	

ARC11-716 IA14 OL+T12+S12N25+AT10 UPPER WING (RB1U32)

ALPHAO(1) = -10.220 BETAO (2) = -7.890

SECTION (1)UPPER WING DEPENDENT VARIABLE CP

Y/BW	.2990	.3640	.4270	.5340	.6730	.7800	.8870
X/CW							
.057			.2933				
.065	.3191						
.900	.2957			.2846			.3012
.935			.2786		.2706		
.950				.2399		.2765	
.953			.2503				
.965	.2175						

ALPHAO(1) = -10.220 BETAO (3) = -5.900

SECTION (1)UPPER WING DEPENDENT VARIABLE CP

Y/BW	.2990	.3640	.4270	.5340	.6730	.7800	.8870
X/CW							
.000	-.1606	-.1209	.3161	.4363	.3251	.2214	.2432
.020				.6518	.5975	.6222	.6041
.025			.5154				
.040		.0845					
.045			.4772				
.050	-.0100			.4626	.4796	.4852	.4844
.080				.3234			
.085			.3689				
.0[illegible]		.2859					
.054	-.0120						
.150				.1126	.1511	.1918	.1705
.163		.0000					
.177			.1529				
.193		.2875					
.229	.0510						
.250				-.0705	-.0347	-.0233	-.0742
.274			.0482				
.339		.0450					
.369	.2219						
.400				.0403	-.0285		-.2202
.422			.021[illegible]				
.497	.0000						
.530				.0465	-.0531		
.565			.[illegible]0				
.600							-.2490
.692						-.1850	
.793	.2338				-.1636		
.72[illegible]				-.0345			
.958						.0216	-.0106
.760			-.1431				

ARC11-916 IA14 OI+T12+S12N25+AT10 UPPER WING (RB1U32)

ALPHAO(1) = -10.220 BETAO (3) = -5.900

SECTION (1)UPPER WING DEPENDENT VARIABLE CP

Y/BW	.2990	.3640	.4270	.5340	.6730	.7800	.8870
CW							
.775				.2278	.1656		
.808			.2661				
.834	.0701						
.850				.2473	.2636	.2608	
.857			.2589				
.865	.2722						
.900	.2552			.2524			.2786
.935			.2534		.2476		
.950				.2128		.2531	
.955			.2103				
.965	.1900						

ALPHAO(1) = -10.230 BETAO (4) = -3.930

SECTION (1)UPPER WING DEPENDENT VARIABLE CP

Y/BW	.2990	.3640	.4270	.5340	.6730	.7800	.8870
X/CW							
.000	-.1904	-.1568	.2823	.3967	.2757	.1632	.1749
.020				.6448	.5827	.6080	.5818
.025			.5023				
.040		.0483					
.045			.4691				
.050	-.0335			.4814	.4837	.4877	.4613
.080				.3424			
.085			.3741				
.086		.2547					
.094	-.0323						
.150				.1508	.1795	.2104	.1861
.163		.0000					
.177			.1822				
.193		.2887					
.229	.0270						
.250				.0004	.0108	.0256	-.0599
.274			.0826				
.339		.0846					
.362	.2208						
.450				.0639	-.0175		-.1928
.482			.0481				
.497	.0000						
.550				.0587	-.0503		
.565			.0000				
.690							-.2400
.650						-.1643	

ARC11-716 IA14 O1+T12+S12N25+AT10 UPPER WING (RB1U32)

ALPHAO(1) = -10.230 BETAO (4) = -3.930

SECTION (1)UPPER WING DEPENDENT VARIABLE CP

Y/BW	.2990	.3640	.4270	.5340	.6730	.7800	.8870
X/CW							
.700	.2170				-.1812		
.725				-.0237			
.750						-.0835	-.0941
.760			-.0347				
.775				.1195	.0283		
.808			.2069				
.834	.0144						
.850				.2193	.2214	.2110	
.857			.2141				
.865	.2177						
.900	.2118			.2333			.2229
.905			.2177		.2273		
.950				.2066		.2336	
.953			.1858				
.965	.1625						

ALPHAO(1) = -10.230 BETAO (5) = -1.940

SECTION (1)UPPER WING DEPENDENT VARIABLE CP

Y/BW	.2990	.3640	.4270	.5340	.6730	.7800	.8870
X/CW							
.000	-.2213	-.1581	.2405	.3434	.2084	.0900	.0967
.020				.6304	.5587	.5845	.5498
.025			.4700				
.040		.0421					
.045			.4483				
.050	-.0620			.4834	.4842	.4873	.4528
.080				.3617			
.085			.3723				
.088		.2255					
.094	-.0643						
.150				.1791	.2084	.2397	.1968
.163		.0000					
.177			.2069				
.193		.2799					
.229	.0011						
.250				.0055	.0598	.0435	-.0327
.274			.1190				
.339		.1178					
.362	.2091						
.400				.0347	.0003		-.1710
.402			.0607				
.497	.0000						

ARC11-716 IA14 O1+T12+S12N25+AT10 UPPER WING (RB1U32)

ALPHAO(1) = -10.230 BETAO (5) = -1.940

SECTION (1)UPPER WING DEPENDENT VARIABLE CP

Y/BW	.2990	.3640	.4270	.5340	.6730	.7800	.8870
X/CW							
.550				.0195	-.0480		
.565			.0000				
.600							-.2384
.650						-.1662	
.700	.1990				-.1963		
.725				-.0757			
.750						-.1084	-.1309
.760			-.0640				
.775				-.0043	-.0436		
.808			.1298				
.834	-.0106						
.850				.1480	.1535	.1399	
.857			.1721				
.865	.1583						
.900	.1706			.1761			.1727
.905			.1827		.2061		
.950				.1589		.2070	
.953			.1597				
.965	.1350						

ALPHAO(1) = -10.240 BETAO (6) = .030

SECTION (1)UPPER WING DEPENDENT VARIABLE CP

Y/BW	.2990	.3640	.4270	.5340	.6730	.7800	.8870
X/CW							
.000	-.2289	-.1242	.2162	.3009	.1474	.0266	.0290
.020				.6160	.5381	.5620	.5206
.025			.4470				
.040		.0474					
.045			.4262				
.050	-.0886			.4836	.4852	.4806	.4429
.060				.3728			
.085			.3027				
.086		.2115					
.094	-.0868						
.150				.2061	.2258	.2507	.2025
.163		.0000					
.177			.2298				
.193		.2746					
.229	-.0137						
.250				.0697	.0770	.0669	-.0201
.274			.1449				
.339		.1382					

ARC11-716 IA14 O1+T12+S12N25+AT10 UPPER WING (RB1U32)

ALPHAO(1) = -10.240 BETAO (6) = .030

SECTION (1)UPPER WING DEPENDENT VARIABLE CP

X/CW \ Y/BW	.2990	.3640	.4270	.5340	.6730	.7800	.8870
.362	.2043						
.400				.0715	.0086		-.1551
.402			.0713				
.497	.0000						
.550				.0431	-.0506		
.565			.0000				
.600							-.2462
.650						-.1717	
.700	.1622				-.2064		
.725				-.0538			
.750						-.1217	-.1571
.760			-.0784				
.775				-.0222	-.0732		
.808			.0155				
.834	-.0311						
.850				.1093	.0165	.0144	
.857			.1211				
.865	.0711						
.900	.1206			.1244			.1082
.905			.1455		.1771		
.950				.1805		.1734	
.953			.1350				
.965	.1090						

ALPHAO(1) = -10.250 BETAO (7) = 2.040

SECTION (1)UPPER WING DEPENDENT VARIABLE CP

X/CW \ Y/BW	.2990	.3640	.4270	.5340	.6730	.7800	.8870
.000	-.1998	-.0509	.2204	.2629	.0969	-.0282	-.0331
.020				.5964	.5136	.5355	.4896
.025			.4213				
.040		.0594					
.045			.4097				
.050	-.1067			.4805	.4745	.4690	.4293
.080				.3760			
.085			.3714				
.086		.1999					
.094	-.0929						
.150				.2194	.2401	.2584	.2043
.163		.0000					
.177			.2425				
.193		.2756					

ARC11-716 IA14 01+T12+S12N25+AT10 UPPER WING (RB1U32)

ALPHAO(1) = -10.250 BETAO (7) = 2.040

SECTION (1)UPPER WING DEPENDENT VARIABLE CP

Y/BW	.2990	.3640	.4270	.5340	.6730	.7800	.8870
X/CW							
.229	-.0057						
.250				.0671	.0925	.0835	-.0096
.274			.1617				
.339		.1557					
.362	.2028						
.400				.0507	.0165		-.1563
.402			.0784				
.497	.0000						
.550				.0106	-.0510		
.565			.0000				
.600							-.2523
.650						-.1742	
.700	.1673				-.2159		
.725				-.0950			
.750						-.1328	-.1793
.760			-.0893				
.775				-.0706	-.0882		
.808			-.0294				
.834	-.0454						
.850				-.0107	-.0598	-.0616	
.857			.0577				
.865	.0126						
.900	.0745			.0887			.0365
.905			.1043		.1355		
.950				.1008		.1146	
.953			.1005				
.965	.0763						

ALPHAO(1) = -10.260 BETAO (8) = 4.030

SECTION (1)UPPER WING DEPENDENT VARIABLE CP

Y/BW	.2990	.3640	.4270	.5340	.6730	.7800	.8870
X/CW							
.000	-.1869	-.0171	.1918	.2164	.0457	-.0764	-.0893
.020				.5762	.4843	.4991	.4490
.025			.3885				
.040		.0639					
.045			.3870				
.050	-.1078			.4786	.4635	.4470	.4053
.080				.3821			
.085			.3574				
.086		.1733					
.094	-.0862						

ARC11-716 IA14 O1+T12+S12N25+AT10 UPPER WING (RB1U32)

ALPHAO(1) = -10.260 BETAO (3) = 4.030

SECTION (1)UPPER WING DEPENDENT VARIABLE CP

Y/BW	.2990	.3640	.4270	.5340	.6730	.7800	.8870
X/CW							
.150				.2311	.2456	.2580	.2010
.163		.0000					
.177			.2548				
.193		.2705					
.229	.0148						
.250				.1110	.1064	.0898	-.0041
.274			.1769				
.339		.1655					
.362	.1947						
.400				.0790	.0201		-.1514
.402			.0843				
.417	.0000						
.550				.0274	-.0518		
.565			.0000				
.600							-.2582
.650						-.1765	
.700	.1429				-.2189		
.725				-.0763			
.750						-.1395	-.2023
.760			-.1019				
.775				-.0620	-.1021		
.808			-.0654				
.834	-.0652						
.850				-.0501	-.0850	-.0876	
.857			-.0130				
.865	-.0403						
.900	.0246			.0689			-.0002
.905			.0792		.0805		
.950				.0981		.0365	
.953			.0691				
.965	.0437						

ALPHAO(1) = -10.250 BETAO (9) = 6.090

SECTION (1)UPPER WING DEPENDENT VARIABLE CP

Y/BW	.2990	.3640	.4270	.5340	.6730	.7800	.8970
X/CW							
.000	-.1851	-.0442	.1551	.1863	-.0138	-.1411	-.1571
.020				.5590	.4360	.4089	.4131
.025			.3697				
.040		.0318					
.049			.3692				
.050	-.1114			.4689	.4540	.4342	.3902

ARC11-716 IA14 O1+T12+S12N25+AT10 UPPER WING (RB1U32)

ALPHAO(1) = -10.250 BETAO (9) = 6.090

SECTION (1)UPPER WING DEPENDENT VARIABLE CP

Y/BW	.2990	.3640	.4270	.5340	.6730	.7800	.8870
X/CW							
.080				.3926			
.085			.3584				
.086		.1409					
.094	-.0810						
.150				.2476	.2552	.2638	.2029
.163		.0000					
.177			.2640				
.193		.2517					
.229	.0056						
.250				.1246	.1175	.1034	.0069
.274			.1870				
.339		.1707					
.362	.1687						
.400				.0789	.0228		-.1446
.402			.0890				
.497	.0000						
.550				.0146	-.0580		
.565			.0000				
.600							-.2624
.650						-.1805	
.700	.1221				-.2179		
.725				-.0908			
.750						-.1470	-.2189
.760			-.1080				
.775				-.0799	-.1176		
.808			-.0891				
.834	-.0805						
.850				-.0846	-.1030	-.1084	
.857			-.0817				
.865	-.0654						
.900	-.0299			.0048			-.0315
.905			.0622		.0282		
.950				.0833		-.0102	
.953			.0504				
.965	.0218						

ARC11-716 IA14 O1+T12+S12N25+AT10 UPPER WING (RB1U32)

ALPHAO(1) = -10.240 BETAO (10) = 8.120

SECTION (1)UPPER WING DEPENDENT VARIABLE CP

Y/SW	.2990	.3640	.4270	.5340	.6730	.7800	.8870
X/CW							
.000	-.1099	-.0689	.1060	.1393	-.0631	-.1943	-.2220
.020				.5480	.4357	.4394	.3708
.025			.3445				
.040		.0082					
.045			.3535				
.050	-.1229			.4738	.4527	.4190	.3691
.080				.4024			
.085			.3502				
.086		.1207					
.094	-.0984						
.150				.2679	.2684	.2665	.1999
.163		.0000					
.177			.2714				
.193		.2489					
.229	-.0181						
.250				.1268	.1351	.1152	.0155
.274			.1973				
.339		.1694					
.362	.1865						
.400				.0645	.0313		-.1363
.402			.0095				
.497	.0000						
.550				-.0211	-.0625		
.565			.0000				
.600							-.2671
.650						-.1816	
.700	.0945				-.2167		
.725				-.1297			
.750						-.1523	-.2298
.760			-.1173				
.775				-.1221	-.1266		
.808			-.1132				
.834	-.0961						
.850				-.1145	-.1193	-.1222	
.857			-.1363				
.865	-.0857						
.900	-.0990			-.1038			-.0569
.905			-.0170		-.0304		
.950				.0186		-.0444	
.953			.0464				
.965	.0072						

ARC11-716 IA14 O1+T12+S12N25+AT10 UPPER WING (RB1U32)

ALPHAO(1) = -10.250 BETAO (11) = 10.110

SECTION (1)UPPER WING DEPENDENT VARIABLE CP

Y/BW	.2990	.3640	.4270	.5340	.6730	.7800	.8870
X/CW							
.000	-.2124	-.0934	.0778	.0995	-.0957	-.2370	-.2614
.020				.5454	.4182	.4175	.3504
.025			.3266				
.040		-.0130					
.045			.3384				
.050	-.1499			.4807	.4485	.4106	.3613
.080				.4132			
.085			.3439				
.086		.1156					
.094	-.1107						
.150				.2877	.2825	.2803	.2130
.163		.0000					
.177			.2720				
.193		.2238					
.229	-.0344						
.250				.1625	.1540	.1313	.0375
.274			.1965				
.339		.1442					
.362	.1273						
.400				.0935	.0427		-.1173
.402			.0819				
.497	.0000						
.550				.0034	-.0546		
.565			.0000				
.600							-.2520
.650						-.1756	
.700	.0669				-.2130		
.725				-.1021			
.750						-.1432	-.2232
.760			-.1261				
.775				-.0969	-.1233		
.808			-.1381				
.834	-.1092						
.850				-.1143	-.1204	-.1127	
.857			-.1636				
.865	-.0983						
.900	-.1318			-.1086			-.0526
.905			-.1055		-.0392		
.950				-.0381		-.0396	
.953			-.0609				
.965	-.0087						

ARC11-716 IA14 O1+T12+S12N25+AT10 UPPER WING (RB1U32)

ALPHAO(2) = -8.190 BETAO (1) = -9.970

SECTION (1)UPPER WING DEPENDENT VARIABLE CP

Y/BW	.2990	.3540	.4270	.5340	.6730	.7800	.8870
X/CW							
.000	-.0968	-.0398	.4564	.5726	.4978	.4149	.4507
.020				.6210	.5882	.6060	.6038
.025			.5236				
.040		.1674					
.045			.4505				
.050	.0270			.3975	.3979	.4093	.3897
.080				.2148			
.085			.3040				
.086		.3503					
.094	.0451						
.150				-.0337	-.0067	.0465	.0495
.163		.0000					
.177			.0519				
.193		.2484					
.229	.0619						
.250				-.2198	-.2044	-.2070	-.2239
.274			-.0828				
.339		-.0703					
.362	.2084						
.400				-.3841	-.4077		-.4605
.402			-.2933				
.497	.0000						
.550				.0699	-.0199		
.565			.0000				
.600							-.4713
.650						-.1919	
.700	.2306				-.1252		
.725				.0691			
.750						.2864	.1415
.760			.1296				
.775				.3203	.3190		
.808			.3305				
.834	.1886						
.850				.3015	.3269	.3586	
.857			.3078				
.865	.3362						
.900	.3130			.2901			.3043
.905			.2894		.2719		
.950				.2360		.2844	
.953			.2336				
.965	.2270						

ARC11-716 IA14 01+T12+S12N25+AT10 UPPER WING (RB1U32)

ALPHAO(2) = -8.200 BETAO (2) = -7.960

SECTION (1)UPPER WING DEPENDENT VARIABLE CP

Y/BW	.2990	.3640	.4270	.5340	.6730	.7800	.8870
X/CW							
.000	-.1310	-.0609	.4254	.5374	.4494	.3652	.3963
.020				.6094	.3686	.5847	.5841
.025			.5073				
.040		.1003					
.045			.4405				
.050	.0007			.3933	.3919	.3986	.3847
.080				.2183			
.085			.2994				
.086		.3190					
.094	-.0138						
.150				-.0200	.0039	.0507	.0579
.163		.0000					
.177			.0596				
.193		.2409					
.229	.0426						
.250				-.1796	-.1967	-.1926	-.2061
.274			-.0691				
.339		-.0600					
.362	.1955						
.400				-.3123	-.3737		-.4257
.402			-.2608				
.497	.0000						
.550				.0837	-.0335		
.565			.0000				
.600							-.3399
.650						-.1596	
.700	.2285				-.1470		
.725				-.0063			
.750						.1221	.1295
.760			.0195				
.775				.808	.2241		
.808			.2992				
.834	.1271						
.850				.2839	.2931	.2958	
.857			.2812				
.865	.2956						
.900	.2803			.2811			.2842
.905			.2695		.2558		
.950				.2362		.2643	
.953			.2200				
.965	.2003						

ARC11-716 IA14 O1+T12+S12N25+AT10 UPPER WING (RB1U32)

ALPHAO(2) = -0.210 BETAO (3) = -5.960

SECTION (1)UPPER WING DEPENDENT VARIABLE CP

Y/BW	.2990	.3640	.4270	.5340	.6730	.7800	.8870
X/CW							
.000	-.1688	-.0971	.3928	.4965	.3975	.3135	.3406
.020				.5946	.5487	.5690	.5660
.025			.4097				
.040		.0567					
.045			.4262				
.050	-.0370			.3918	.3881	.4009	.3840
.080				.2250			
.085			.2996				
.086		.2804					
.094	-.0390						
.150				.0030	.0319	.0737	.0685
.163		.0000					
.177			.0760				
.193		.2354					
.229	.0160						
.250				-.1627	-.1642	-.1575	-.1897
.274			-.0554				
.339		-.0412					
.362	.1861						
.400				.0193	-.0203		-.3823
.402			-.1340				
.497	.0000						
.550				.0547	-.0704		
.565			.0000				
.600							-.2529
.650						-.1958	
.700	.2125				-.1706		
.725				-.0277			
.750						-.0825	-.0936
.760			-.0434				
.775				.1068	.0278		
.808			.2072				
.834	.0285						
.850				.2271	.2227	.2155	
.857			.2229				
.885	.2143						
.900	.2178			.2404			.2182
.905			.2264		.2269		
.950				.2079		.2290	
.953			.1917				
.965	.1703						

ARC11-716 IA14 O1+T12+S12N25+AT10 UPPER WING (RB1U32)

ALPHAO(2) = -8.220 BETAO (4) = -1.980

SECTION (1)UPPER WING DEPENDENT VARIABLE CP

Y/BW	.2990	.3640	.4270	.5340	.6730	.7800	.8870
X/CW							
.000	-.2167	-.1223	.5237	.4138	.2990	.1947	.2172
.020				.5760	.5207	.5424	.5303
.025			.4505				
.040		.0523					
.045			.4110				
.050	-.0820			.4026	.4060	.4065	.3869
.080				.2617			
.085			.3064				
.086		.2481					
.094	-.0563						
.150				.0712	.1034	.1335	.1067
.163		.0000					
.177			.1197				
.193		.2384					
.229	-.0073						
.250				-.0666	-.0737	-.0618	-.1270
.274			.0334				
.339		.0218					
.362	.1852						
.400				.0248	-.0296		-.2389
.402			-.0228				
.497	.0000						
.550				.0322	-.0783		
.565			.0000				
.600							-.2847
.650						-.2000	
.700	.1834				-.1949		
.725				-.0533			
.750						-.1417	-.1680
.760			-.0567				
.775				-.0242	-.0799		
.808			.0293				
.834	-.0291						
.850				.0624	-.0085	.0073	
.857			.0998				
.865	.0855						
.900	.1031			.1503			.1011
.905			.1367		.1674		
.950				.1536		.1546	
.953			[illegible]9				
.965	.0993						

ARC11-716 1A14 O1+T12+S12N25+AT10 UPPER WING (RB1U32)

ALPHAO(2) = -8.150 BETAO (5) = .010

SECTION (1)UPPER WING DEPENDENT VARIABLE CP

Y/BW	.2990	.3640	.4270	.5340	.6730	.7800	.8870
X/CW							
.000	-.2355	-.0682	.3002	.3690	.2380	.1304	.1470
.020				.5361	.5023	.5270	.5076
.025			.4195				
.040		.0687					
.045			.3757				
.050	-.1066			.3968	.4051	.4089	.3914
.080				.2684			
.085			.3002				
.086		.2276					
.094	-.0919						
.150				.1002	.1342	.1561	.1343
.163		.0000					
.177			.1332				
.193		.2195					
.229	-.0107						
.250				-.0258	-.0313	-.0130	-.0912
.274			.0570				
.339		.0496					
.362	.1741						
.400				.0319	-.0290		-.2239
.402			.0019				
.497	.0000						
.550				.0211	-.0827		
.585			.0000				
.600							-.2811
.650						-.2033	
.700	.1646				-.2043		
.725				-.0375			
.759						-.1513	-.1728
.760			-.0775				
.775				-.0474	-.0987		
.808			-.0149				
.834	-.0464						
.850				-.0233	-.0680	-.0499	
.857			.0228				
.865	.0379						
.900	.0499			.0775			.0511
.905			.0839		.1123		
.950				.1088		.0874	
.953			.0939				
.965	.0350						

ARC11-716 IA14 01+T12+212N25+AT1D UPPER WING (RB1032)

ALPHA0(3) = -8.190 BETA0 (6) = 2.040

SECTION (1)UPPER WING DEPENDENT VARIABLE CP

Y/BW	.2340	.3640	.4270	.5340	.6730	.7800	.8670
X/CW							
.000	-.2278	-.0209	.2611	.3328	.1875	.0707	.0821
.020				.5206	.4829	.5104	.4823
.025			.3804				
.040		.0789					
.045			.3522				
.050	-.1246			.3988	.4057	.4075	.3839
.080				.2939			
.085			.2920				
.088		.2023					
.094	-.1038						
.150				.1309	.1526	.1777	.1412
.163		.0000					
.177			.1571				
.193		.2106					
.229	.0030						
.250				.0075	.0036	.00[illegible]	-.0773
.274			.0885				
.339		.0674					
.392	.1654						
.400				.0326	-.0254		-.2100
.432			.0244				
.497	.0000						
.550				.0137	-.0603		
.565			.0000				
.600							-.2830
.650						-.2020	
.700	.1499				-.2107		
.725				-.0787			
.750						-.1600	-.1908
.780			-.0879				
.775				-.0651	-.1110		
.808			-.0498				
.834	-.0601						
.850				-.0584	-.0891	-.0855	
.857			-.0240				
.865	-.0074						
.900	.0150			.0226			.0188
.905			.0449		.0347		
.950				.0702		.0412	
.955			.0487				
.955	.0235						

ARC11-716 IA14 01+T12+S12N25+A710 UPPER WING (R81U32)

ALPHAO(2) = -8.240 BETAO (7) = 4.049

SECTION (1)UPPER WING DEPENDENT VARIABLE CP

Y/BW	.2990	.3640	.4270	.5340	.6730	.7850	.8870
X/CW							
.000	-.2[illegible]9	-.0136	.2183	.2901	.1339	.0198	.0241
.020				.5349	.4623	.4815	.4476
.025			.3670				
.040		.0004					
.045			.3500				
.050	-.1301			.4079	.4032	.3942	.3629
.080				.3022			
.085			.3000				
.086		.1775					
.094	-.1015						
.150				.1557	.1639	.1826	.1357
.163		.0000					
.177			.1810				
.193		.2172					
.229	.0219						
.250				.0321	.0265	.0164	-.0742
.274			.1115				
.339		.1064					
.362	.1643						
.400				.0290	-.0281		-.2086
.402			.0311				
.497	.0000						
.550				.0006	-.0860		
.565			.0000				
.600							-.2922
.650						-.2090	
.700	.1264				-.2108		
.725				-.0951			
.750						-.1712	-.2169
.780			-.1105				
.775				-.0832	-.1291		
.808			-.0958				
.834	-.0782						
.850				-.0897	-.1143	-.1197	
.857			-.0760				
.865	-.0527						
.900	-.0231			-.0[illegible]13			-.0188
.905			.0193		-.0249		
.950				.0451		-.0046	
.953			.0214				
.965	-.0067						

ARC11-716 IA14 O1+T12+S12N25+AT10 UPPER WING (RB1U32)

ALPHAO(2) = -8.220 BETAO (8) = 6.070

SECTION (1)UPPER WING DEPENDENT VARIABLE CP

Y/SW	.2990	.3540	.4270	.5340	.6730	.7800	.8870
X/CW							
.000	-.2629	-.0284	.1461	.2616	.0860	-.0369	-.0384
.020				.5190	.4439	.4647	.4221
.025			.3219				
.040		.0435					
.045			.3208				
.050	-.1309			.4034	.4046	.3917	.3578
.080				.3077			
.085			.2892				
.086		.1342					
.094	-.1021						
.150				.1695	.1823	.1967	.1472
.163		.0000					
.177			.1880				
.193		.1960					
.229	.0114						
.250				.0523	.0513	.0349	-.0576
.274			.1206				
.339		.1095					
.362	.1375						
.400				.0335	-.0206		-.1953
.402			.0388				
.497	.0006						
.550				-.0084	-.0882		
.565			.0000				
.600							-.2937
.650						-.2091	
.700	.1048				-.2151		
.725				-.1042			
.750						-.1767	-.2344
.760			-.1189				
.775				-.0959	-.1384		
.808			-.1013				
.834	-.0964						
.850				-.1057	-.1309	-.1366	
.857			-.1140				
.865	-.0821						
.900	-.0636			-.0773			-.0475
.905			-.0211		-.0674		
.950				.0169		-.0358	
.953			-.0005				
.965	-.0340						

ARC11-716 IA14 O1+T12+S12N25+AT10 UPPER WING (RB1U32)

ALPHAO(2) = -8.230 BETAO (9) = 8.080

SECTION (1)UPPER WING DEPENDENT VARIABLE CP

Y/BW	.2990	.3640	.4270	.5340	.6730	.7800	.8670
X/CW							
.000	-.2579	-.0518	.0993	.1736	.0394	-.0903	-.1002
.020				.5154	.4287	.4390	.3890
.025			.2963				
.040		.0215					
.045			.2994				
.050	-.1537			.4224	.4072	.3825	.3449
.080				.3378			
.085			.2922				
.086		.1281					
.094	-.1155						
.150				.2007	.2021	.2375	.1529
.163		.0000					
.177			.2093				
.193		.1825					
.229	-.0155						
.250				.0934	.0728	.0534	-.0405
.274			.1428				
.339		.1217					
.362	.1242						
.400				.0426	-.0110		-.1839
.402			.0511				
.497	.0000						
.550				-.0165	-.0887		
.565			.0000				
.600							-.2941
.650						-.2080	
.700	.0865				-.2104		
.725				-.1126			
.750						-.1752	-.2460
.760			-.1315				
.775				-.1082	-.1484		
.808			-.1227				
.834	-.1056						
.850				-.1219	-.1394	-.1472	
.857			-.1535				
.865	-.0273						
.900	-.1124			-.1190			-.0724
.905			-.0790		-.0880		
.950				-.0326		-.0623	
.953			-.0123				
.965	-.0461						

ARC11-716 IA14 01+T12+S12N25+AT10 UPPER WING (R91U32)

ALPHAO(2) = -8.240 BETAO (10) = 10.100

SECTION (1)UPPER WING DEPENDENT VARIABLE CP

Y/BW	.2990	.3640	.4270	.5340	.6730	.7800	.8870
X/CW							
.000	-.2709	-.0631	.0771	.1098	.0071	-.1225	-.1304
.020				.4915	.4220	.4267	.3817
.025			.2693				
.040		-.0009					
.045			.2840				
.050	-.1714			.4292	.4087	.3654	.3497
.080				.3369			
.085			.2835				
.086		.1151					
.094	-.1383						
.150				.2244	.2225	.2291	.1716
.163		.0000					
.177			.2194				
.193		.1701					
.229	-.0396						
.250				.0838	.0976	.0787	-.0177
.274			.1484				
.339		.1084					
.362	.1060						
.400				.0353	.0063		-.1610
.402			.0419				
.497	.0000						
.550				-.0384	-.0793		
.565			.0000				
.600							-.2788
.650						-.2024	
.700	.0702				-.2075		
.725				-.1396			
.750						-.1660	-.2407
.760			-.1357				
.775				-.1362	-.1405		
.808			-.1344				
.834	-.1093						
.850				-.1538	-.1335	-.1372	
.857			-.1684				
.865	-.1005						
.900	-.1324			-.1570			-.0622
.935			-.1277		-.0841		
.950				-.1033		-.0604	
.953			-.0377				
.965	-.0458						

ARC11-716 IA14 O1+T1P+S12N25+AT10 UPPER WING (RB1U32)

ALPHAO(3) = -6.210 BETAO (1) = -10.020

SECTION (1)UPPER WING DEPENDENT VARIABLE CP

Y/BW	.2990	.3640	.4270	.5340	.6730	.7800	.8870
X/CW							
.000	-.0813	-.0061	.5169	.6328	.5628	.4888	.5250
.020				.578[illegible]	.5485	.5606	.5669
.025			.5032				
.040		.1162					
.045			.4159				
.050	-.0181			.3426	.3342	.3461	.3248
.080				.1528			
.085			.2482				
.086		.3409					
.094	.0094						
.150				-.0948	-.0810	-.0271	-.0115
.163		.0000					
.177			.0057				
.193		.2169					
.229	.0279						
.250				-.2492	-.2637	-.2610	-.2655
.274			-.1354				
.339		-.1054					
.362	.1922						
.400				-.4016	-.4616		-.4975
.402			-.3355				
.497	.0000						
.550				-.0372	-.5107		
.565			.0000				
.600							-.5251
.650						-.4990	
.700	.1627				-.1304		
.725				.0547			
.750						-.0016	-.1503
.760			.1089				
[illegible]				.3041	.2920		
			.3225				
[illegible]				.3113	.3159	.3048	
.857			.3094				
.865	[illegible]						
.900	.3084			.2990			.0400
.905					.2612		
.950				[illegible]468		.3073	
.953			.2375				
.965	.2311						

ARC1:-716 IA14 O1+T12+S12N25+AT10 UPPER WING (RB1U32)

ALPHAD(3) = -6.220 BETAD (2) = -7.960

SECTION (1)UPPER WING DEPENDENT VARIABLE CP

Y/BW	.2990	.3640	.4270	.5340	.6730	.7800	.8870
X/CW							
.000	-.1244	-.0295	.4851	.5945	.5156	.4406	.4738
.020				.5564	.5242	.5335	.5396
.025			.4336				
.040		.1641					
.045			.3868				
.050	-.0446			.3260	.3222	.3304	.3126
.080				.1435			
.085			.2390				
.086		.3300					
.094	-.0446						
.150				-.0984	-.0800	-.0300	-.0172
.163		.0000					
.177			-.0011				
.193		.2041					
.229	.0171						
.250				-.2436	-.2552	-.2564	-.2711
.274			-.1352				
.339		-.1043					
.362	.1760						
.400				-.3814	-.4450		-.5010
.402			-.3208				
.497	.0000						
.500				.0291	-.1487		
.565			.0000				
.600							-.5340
.650						-.2091	
.700	.1847				-.1451		
.725				-.0260			
.750						.1753	-.0845
.760			-.0222				
.775				.2361	.2096		
.800			.2761				
.834	.0836						
.850				.2768	.2833	.2913	
.857			.2722				
.865	.2639						
.900	.2642			.2748			.1857
.905			.2659		.2436		
.950				.2297		.2634	
.953			.2168				
.965	.2048						

ARC11-?.0 IA14 O1+T12+S12N25+AT10 UPPER WING (RB1U32)

ALPHAO(3) = -6.230 BETAO (3) = -5.960

SECTION (1)UPPER WING DEPENDENT VARIABLE CP

Y/BW	.2990	.3640	.4270	.5340	.6730	.7800	.8870
X/CW							
.000	-.1530	-.0494	.4475	.5532	.4659	.3825	.4157
.020				.5432	.5031	.5128	.5121
.025			.4482				
.040		.1406					
.045			.3746				
.050	-.0690			.3245	.3149	.3163	.2939
.080				.1492			
.085			.2364				
.086		.2886					
.094	-.0619						
.150				-.0800	-.0706	-.0258	-.0231
.163		.0000					
.177			.0167				
.193		.1920					
.229	-.0008						
.250				-.2470	-.2477	-.2535	-.2718
.274			-.1078				
.339		-.0902					
.362	.1606						
.400				-.3904	-.4264		-.4872
.402			-.2924				
.497	.0000						
.550				.0355	-.0423		
.565			.0000				
.600							-.5024
.650						-.1613	
.700	.1844				-.1729		
.725				-.0632			
.750						-.0462	.0323
.760			-.0468				
.775				.0310	.0059		
.808			.1482				
.834	.0071						
.850				.1920	.2145	.2296	
.857			.2050				
.865	.1690						
.900	.1879			.2200			.2401
.905			.2218		.2175		
.950				.1864		.2278	
.953			.1854				
.965	.1649						

ARC11-716 IA14 O1+T12+S12N25+AT10 UPPER WING (RB1U32)

ALPHAO(3) = -6.120 BETAO (4) = -1.980

SECTION (1)UPPER WING DEPENDENT VARIABLE CP

Y/BW	.2990	.3640	.4270	.5340	.6730	.7800	.8870
X/CW							
.000	-.1940	-.0546	.3844	.4690	.3673	.2790	.3057
.020				.5109	.4573	.4772	.4800
.025			.4109				
.040		.0818					
.045			.3034				
.050	-.1233			.3142	.3011	.3103	.2974
.080				.1589			
.085			.2329				
.086		.2320					
.094	-.0844						
.150				-.0454	-.0294	.0088	.0057
.163		.0000					
.177			.0401				
.193		.1879					
.229	-.0318						
.250				-.2112	-.1986	-.1972	-.2357
.274			-.0764				
.339		-.0685					
.362	.1511						
.400				-.0861	-.0677		-.3964
.402			-.1097				
.497	.0000						
.550				-.0003	-.1006		
.565			.0000				
.600							-.2878
.650						-.2290	
.700	.1600				-.1994		
.725				-.0903			
.750						-.1598	-.4426
.760			-.0807				
.775				-.0650	-.1078		
.800			-.0043				
.834	-.0513						
.850				-.0380	-.0521	.0126	
.857			.0188				
.865	.0524						
.900	.0356			.0679			.1109
.905			.0889		.1392		
.950				.1155		.1263	
.953			.1004				
.965	.0619						

ARC11-716 IA14 O1+T12+S12N25+AT10 UPPER WING (RB1U32)

ALPHAO(3) = -6.130 BETAO (5) = .000

SECTION (1)UPPER WING DEPENDENT VARIABLE CP

Y/BW	.2990	.3640	.4270	.5340	.6730	.7800	.8870
X/CW							
.000	-.2115	-.0110	.3545	.4254	.3136	.22	.2511
.020				.4893	.4367	.4719	.4704
.025			.3798				
.040		.1083					
.045			.3269				
.050	-.1446			.3037	.3141	.3197	.3038
.080				.1667			
.085			.2190				
.086		.2220					
.094	-.1026						
.150				-.0133	.0151	.0392	.0267
.163		.0000					
.177			.0437				
.193		.1729					
.229	-.0089						
.250				-.1397	-.1481	-.1426	-.1998
.274			-.0421				
.339		-.0521					
.362	.1431						
.400				-.0555	-.0857		-.2936
.402			-.0704				
.497	.0000						
.550				.0006	-.1116		
.565			.0000				
.600							-.3085
.650						-.2382	
.700	.1423				-.2086		
.725				-.0867			
.730						-.1801	-.1736
.760			-.0886				
.775				-.0694	-.1269		
.808			-.0413				
.834	-.0661						
.850				-.0602	-.0938	-.0519	
.857			-.0312				
.865	.0153						
.900	-.0102			-.0061			.0654
.905			.0235		.0441		
.950				.0522		.0754	
.953			.0391				
.965	.0123						

ARC11-716 IA14 D1+T12+S12N25+AT10 UPPER WING (RB1U32)

ALPHAO(3) = -6.120 BETAO (6) = 2.030

SECTION (1)UPPER WING DEPENDENT VARIABLE CP

Y/BW	.2990	.3640	.4270	.5340	.6730	.7800	.8870
X/CW							
.000	-.2389	.0124	.3224	.3954	.2759	.1707	.1969
.020				.4798	.4355	.4613	.4500
.025			.3457				
.040		.1080					
.045			.2979				
.050	-.1479			.3120	.3247	.3264	.3036
.080				.1776			
.085			.2176				
.086		.1867					
.094	-.1138						
.150				.0221	.0466	.0613	.0381
.163		.0000					
.177			.0742				
.193		.1603					
.229	.0153						
.250				-.0861	-.1156	-.1160	-.1845
.274			.0119				
.339		-.0021					
.362	.1317						
.400				-.0480	-.0789		-.2603
.402			-.0603				
.497	.0000						
.550				-.0109	-.1151		
.565			.0000				
.600							-.3214
.650						-.2415	
.700	.1245				-.2130		
.725				-.0989			
.750						-.1921	-.2048
.760			-.1019				
.775				-.0871	-.1417		
.808			-.0726				
.834	-.0824						
.850				-.0892	-.1252	-.0986	
.857			-.0682				
.865	-.0250						
.900	-.0404			-.0590			.0293
.905			-.0129		-.0325		
.950				.0034		.0297	
.953			-.0024				
.965	-.0273						

ARC11-716 IA14 O1+T12+S12N25+AT10 UPPER WING (RB1U32)

ALPHAO(3) = -6.110 BETAO (7) = 4.060

SECTION (1)UPPER WING DEPENDENT VARIABLE CP

Y/BW	.2990	.3640	.4270	.5340	.6730	.7800	.8870
X/CW							
.000	-.2971	.0078	.2461	.3647	.2255	.1174	.1433
.020				.4704	.4138	.4355	.4184
.025			.3183				
.040		.0829					
.045			.2868				
.050	-.1424			.3194	.3169	.3102	.2874
.080				.1990			
.085			.2234				
.086		.1609					
.094	-.0992						
.150				.0482	.0562	.0725	.0430
.163		.0000					
.177			.0938				
.193		.1648					
.229	.0295						
.250				-.0666	-.0824	-.0958	-.1632
.274			.0352				
.339		.0248					
.362	.1303						
.400				-.0416	-.0811		-.2653
.402			-.0426				
.497	.0000						
.550				-.0256	-.1175		
.565			.0000				
.600							-.3284
.650						-.2439	
.700	.1019				-.2094		
.725				-.1128			
.750						-.2012	-.2219
.760			-.1175				
.775				-.1063	-.1552		
.808			-.0990				
.834	-.0999						
.850				-.1169	-.1446	-.1361	
.857			-.1073				
.865	-.0703						
.900	-.0785			-.1060			-.0150
.905			-.0486		-.0842		
.950				-.0272		-.0114	
.953			-.0338				
.965	-.0551						

ARC11-71S IA14 01+T12+S12N25+ATID UPPER WING (R81U32)

ALPHAO(3) = -6.190 BETAO (8) = 6.080

SECTION (1)UPPER WING DEPENDENT VARIABLE CP

Y/BW	.2990	.3640	.4270	.5340	.6730	.7820	.8670
X/CW							
.000	-.3343	-.3120	.1624	.3176	.1729	.0539	.0732
.020				.4525	.4027	.4264	.4037
.025			.2636				
.040		.0537					
.045			.2633				
.050	-.1464			.3219	.3291	.3208	.2963
.060				.2203			
.085			.2294				
.086		.1293					
.094	-.0924						
.150				.0825	.0926	.1069	.0693
.163		.0000					
.177			.1183				
.193		.1433					
.229	.0218						
.250				-.0233	-.0448	-.0549	-.1311
.274			.0582				
.339		.0450					
.362	.1162						
.400				-.0256	-.0746		-.2507
.402			-.0179				
.497	.0000						
.550				-.0353	-.1203		
.565			.0000				
.600							-.3274
.650						-.2425	
.700	.0881				-.2116		
.725				-.1279			
.750						-.2044	-.2476
.760			-.1243				
.775				-.1218	-.1639		
.808			-.1163				
.834	-.1099						
.850				-.1331	-.1577	-.1579	
.837			-.1356				
.865	-.0896						
.900	-.1127			-.1233			-.0471
.905			-.0721		-.1109		
.950				-.0541		-.0489	
.953			-.0434				
.965	-.0695						

ARC11-716 IA14 01+T12+S12N25+AT10 UPPER WING (RB1U32)

ALPHAO(3) = -6.190 BETAO (9) = 8.090

SECTION (1)UPPER WING DEPENDENT VARIABLE CP

Y/BW	.2990	.3640	.4270	.5540	.6730	.7800	.8870
X/CW							
.000	-.3499	-.0294	.1273	.2193	.1448	.0118	.0242
.020				.4215	.4018	.4172	.3564
.025			.2227				
.040		.0313					
.045			.2943				
.050	-.1678			.3288	.3438	.3258	.2976
.080				.2479			
.085			.2220				
.086		.1127					
.094	-.1171						
.150				.1222	.1229	.1303	.0840
.163		.0000					
.177			.1418				
.193		.1444					
.229	.0076						
.250				.0164	-.0038	-.0236	-.1111
.274			.0841				
.339		.0594					
.362	.1030						
.400				-.0066	-.0612		-.2353
.402			.0019				
.497	.0000						
.550				-.0338	-.1155		
.565			.0000				
.600							-.3216
.650						-.2404	
.700	.0720				-.2078		
.725				-.1378			
.750						-.2009	-.2566
.760			-.1292				
.775				-.1314	-.1671		
.808			-.1318				
.834	-.1182						
.850				-.1450	-.1632	-.1678	
.857			-.1614				
.865	-.1048						
.900	-.1514			-.1455			-.0703
.905			-.1064		-.1192		
.950				-.0861		-.0713	
.955			-.0542				
.965	-.0847						

ARC11-716 IA14 O1+T12+S12N25+AT10 UPPER WING (RB1U32)

ALPHAO(3) = -6.170 BETAO (10) = 10.090

SECTION (1)UPPER WING DEPENDENT VARIABLE CP

Y/BW	.2990	.3640	.4270	.5340	.6730	.7800	.8870
X/CW							
.000	-.3672	-.0469	.0795	.1674	.1155	-.0147	-.0048
.020				.4027	.4012	.4175	.3797
.025			.2136				
.040		.0055					
.045			.2157				
.050	-.1963			.3334	.3526	.3354	.3059
.080				.2624			
.085			.2152				
.086		.1022					
.094	-.1426						
.150				.1459	.1466	.1565	.1045
.163		.0000					
.177			.1459				
.193		.1285					
.229	-.0044						
.250				.0376	.0251	.0059	-.0866
.274			.0910				
.339		.0587					
.362	.0879						
.400				.0058	-.0437		-.2180
.402			.0083				
.497	.0000						
.550				-.0396	-.1088		
.565			.0000				
.600							-.3112
.650						-.2332	
.700	.0554				-.2062		
.725				-.1384			
.750						-.1931	-.2558
.760			-.1368				
.775				-.1330	-.1650		
.808			-.1412				
.834	-.1251						
.850				-.1494	-.1595	-.1630	
.857			-.1741				
.865	-.1192						
.900	-.1756			-.1486			-.0671
.905			-.1363		-.1144		
.950				-.1057		-.0710	
.953			-.0851				
.965	-.0965						

DATE 10 JAN 79 TABULATED PRESSURE DATA - IA14A - VOL. 6

ARC11-716 IA14 O1+T12+S12N25+AT10 UPPER WING (RB1U32)

ALPHAO(4) = -4.240 BETAO (1) = -10.010

SECTION (1)UPPER WING DEPENDENT VARIABLE CP

Y/BW	.2990	.3640	.4270	.5340	.6730	.7800	.8870
X/CW							
.000	-.0849	.0310	.5530	.6783	.6212	.5657	.6080
.020				.4910	.4739	.4855	.4859
.025			.4377				
.040		.2717					
.045			.3323				
.050	-.0652			.2398	.2259	.2545	.2163
.060				.0493			
.085			.1514				
.086		.3226					
.094	-.0183						
.150				-.2047	-.1885	-.1348	-.1116
.163		.0000					
.177			-.0873				
.193		.1448					
.229	.0347						
.250				-.3418	-.3730	-.3643	-.3595
.274			-.2291				
.339		-.1778					
.362	.1448						
.400				-.4809	-.5450		-.5776
.492			-.4221				
.497	.0000						
.550				-.1744	-.6001		
.565			.0000				
.600							-.6061
.650						-.5729	
.700	.0471				-.1646		
.725				-.0319			
.750						-.3034	-.3393
.760			.0066				
.775				.1919	.1547		
.808			.2700				
.834	.0864						
.850				.2621	.2490	-.1042	
.857			.2714				
.865	.2665						
.900	.2434			.2647			-.1331
.905			.2637		.2232		
.950				.2163		.1627	
.953			.2098				
.965	.2035						

ARC11-716 IA14 O1+T12+S12N25+AT10 UPPER WING (RB1U32)

ALPHAO(4) = -4.270 BETAO (2) = -8.020

SECTION (1)UPPER WING DEPENDENT VARIABLE CP

Y/BW	.2990	.3640	.4270	.5340	.6730	.7800	.8870
X/CW							
.000	-.1210	.0030	.3198	.6430	.5751	.5167	.5688
.020				.4776	.4562	.4669	.4722
.025			.4130				
.040		.2044					
.045			.3135				
.050	-.1002			.2328	.2161	.2448	.2106
.080				.0482			
.085			.1406				
.086		.2896					
.094	-.0612						
.150				-.1994	-.1877	-.1279	-.1099
.163		.0000					
.177			-.0886				
.193		.1284					
.229	.0150						
.250				-.3311	-.3580	-.3554	-.3577
.274			-.2234				
.339		-.1818					
.362	.1241						
.400				-.4509	-.5238		-.5721
.402			-.3900				
.497	.0000						
.550				-.0952	-.5602		
.565			.0000				
.600							-.6021
.650						-.5731	
.700	.0984				-.1698		
.725				-.0680			
.750						-.2349	-.2697
.760			-.0747				
.775				.1337	.1434		
.808			.1993				
.834	.0188						
.850				.2335	.2258	.1684	
.857			.2317				
.865	.1893						
.900	.1944			.2441			-.0926
.905			.2358		.2118		
.950				.2041		.2720	
.953			.1913				
.965	.1782						

ARC11-716 IA14 O1+T12+S12N25+AT10 UPPER WING (RB1U32)

ALPHAO(4) = -4.290 BETAO (3) = -5.970

SECTION (1)UPPER WING DEPENDENT VARIABLE CP

Y/BW	.2990	.3640	.4270	.5340	.6730	.7800	.8870
X/CW							
.000	-.1542	-.0251	.4863	.6041	.5294	.4544	.5171
.020				.4704	.4395	.4460	.4544
.025			.3965				
.040		.1275					
.045			.3037				
.050	-.1293			.2385	.2190	.2368	.2071
.080				.0620			
.085			.1478				
.086		.2535					
.094	-.0890						
.150				-.1694	-.1689	-.1166	-.1101
.163		.0000					
.177			-.0621				
.193		.1254					
.229	-.0050						
.250				-.3209	-.3260	-.3341	-.3509
.274			-.1767				
.339		-.1428					
.362	.1167						
.400				-.4525	-.4943		-.5608
.402			-.3537				
.497	.0000						
.550				-.0562	-.3260		
.565			.0000				
.300							-.5797
.650						-.4807	
.700	.1234				-.1838		
.725				-.0799			
.750						.0691	-.2118
.760			-.0727				
.775				-.0077	.0242		
.808			.0670				
.834	-.0223						
.850				.1475	.1673	.2006	
.857			.1632				
.865	.1121						
.900	.1273			.1929			.0053
.905			.2014		.1832		
.950				.1677		.2142	
.955			.1688				
.965	.1453						

ARC11-716 IA14 D1+T12+S12N25+AT10 UPPER WING (RB1U32)

ALPHAO(4) = -4.250 BETAO (4) = -3.970

SECTION (1)UPPER WING DEPENDENT VARIABLE CP

X/CW \ Y/BW	.2990	.3640	.4270	.5340	.6730	.7800	.8870
.000	-.1687	-.0434	.4531	.5680	.4858	.3996	.4536
.020				.4526	.4154	.4192	.4408
.025			.3794				
.040		.0833					
.045			.2916				
.050	-.1518			.2328	.2071	.2195	.2037
.080				.0613			
.085			.1487				
.086		.2211					
.094	-.1043						
.150				-.1574	-.1583	-.1205	-.1030
.163		.0000					
.177			-.0546				
.193		.1245					
.229	-.0259						
.250				-.3005	-.3076	-.3178	-.3396
.274			-.1646				
.330		-.1375					
.362	.1142						
.400				-.4186	-.4763		-.5535
.402			-.3317				
.497	.0000						
.550				-.0111	-.0958		
.565			.0000				
.600							-.5520
.650						-.1801	
.700	.1309				-.1872		
.725				-.0815			
.750						-.0416	-.0865
.760			-.0758				
.775				-.0448	-.0700		
.808			.0115				
.834	-.0437						
.850				.0700	.0916	.1709	
.857			.0895				
.865	.0620						
.900	.0494			.1671			.1921
.905			.1631		.1747		
.950				.1539		.1830	
.953			.1459				
.965	.1132						

ARC11-716 IA14 O1+T12+S12N25+AT10 UPPER WING (RB1U32)

ALPHA0(4) = -4.240 BETA0 (5) = -1.960

SECTION (1)UPPER WING DEPENDENT VARIABLE CP

X/CW \ Y/SW	.2990	.3640	.4270	.5340	.6730	.7800	.8870
.000	-.1712	-.0341	.4221	.5213	.4293	.3456	.3850
.020				.4458	.3961	.3955	.4112
.025			.3652				
.040		.0749					
.045			.2907				
.050	-.1738			.2337	.2053	.2051	.2242
.060				.0695			
.085			.1577				
.086		.2089					
.094	-.1150						
.150				-.1381	-.1510	-.1148	-.0665
.163		.0000					
.177			-.0310				
.193		.1315					
.229	-.0388						
.250				-.2814	-.3006	-.2854	-.3018
.274			-.1521				
.339		-.1254					
.362	.1160						
.400				-.3404	-.4021		-.5019
.402			-.3028				
.497	.0000						
.550				.0058	-.0854		
.565			.0000				
.600							-.3750
.650						-.2053	
.700	.1317				-.1944		
.725				-.0903			
.750						-.1519	-.0240
.760			-.0830				
.775				-.0640	-.1021		
.808			-.0158				
.834	-.0632						
.850				-.0342	-.0017	.0968	
.857			-.0005				
.865	.0411						
.900	.0022			.0754			.1560
.905			.0744		.1395		
.950				.1217		.1478	
.95_			.1031				
.965	.0532						

ARC11-716 IA14 O1+T12+S12W25+AT10 UPPER WING (RB1U32)

ALPHAD(4) = -4.220 BETAD (5) = .020

SECTION (1)UPPER WING DEPENDENT VARIABLE CP

X/CW \ Y/BW	.2990	.3640	.4270	.5341	.6730	.7800	.8870
.000	-.1881	-.0041	.3950	.4802	.3829	.3015	.3462
.020				.4310	.3791	.3898	.4228
.025			.3503				
.040		.1123					
.045			.2787				
.050	-.1876			.2305	.2022	.2238	.2217
.080				.0756			
.085			.1567				
.086		.2080					
.094	-.1176						
.150				-.1177	-.1181	-.0630	-.0568
.163		.0000					
.177			-.0149				
.193		.1328					
.229	-.0210						
.250				-.2395	-.2593	-.2579	-.2900
.274			-.1269				
.339		-.1031					
.362	.1184						
.400				-.1017	-.1904		-.4663
.402			-.1228				
.497	.0000						
.550				-.0103	-.1202		
.565			.0000				
.600							-.2473
.650						-.2395	
.700	.1204				-.2018		
.725				-.0947			
.750						-.1696	-.1142
.760			-.0970				
.775				-.0789	-.1243		
.808			-.0497				
.834	-.0793						
.850				-.0703	-.0850	.0086	
.857			-.0486				
.865	.0049						
.900	-.0398			-.0278			.0934
.905			.0005		.0610		
.950				.0445		.0985	
.953			.0226				
.965	-.0133						

ARC11-716 IA14 O1+T12+S12N25+AT10 UPPER WING (RB1U32)

ALPHAO(4) = -4.290 BETAO (7) = 2.020

SECTION (1)UPPER WING DEPENDENT VARIABLE CP

Y/BW	.2990	.3640	.4270	.5340	.6730	.7800	.8670
X/CW							
.000	-.2459	.0065	.3490	.4495	.3441	.2563	.2874
.020				.4188	.3790	.3991	.4019
.025			.3126				
.040		.1098					
.045			.2535				
.050	-.1832			.2293	.2251	.2386	.2200
.080				.0930			
.085			.1480				
.086		.1788					
.094	-.1234						
.150				-.0724	-.0606	-.0396	-.0506
.163		.0000					
.177			-.0025				
.193		.1216					
.229	.0069						
.250				-.1880	-.2117	-.2285	-.2753
.274			-.0876				
.339		-.0745					
.362	.1080						
.400				-.1227	-.1855		-.4047
.402			-.1175				
.497	.0000						
.550				-.0357	-.1336		
.565			.0000				
.600							-.2983
.650						-.2614	
.700	.1016				-.2109		
.725				-.1087			
.750						-.1985	-.1654
.760			-.1155				
.775				-.1010	-.1525		
.808			-.0824				
.834	-.1007						
.850				-.1111	-.1318	-.0608	
.857			-.0852				
.865	-.0353						
.900	-.0741			-.0968			.0523
.905			-.0466		-.0179		
.950				-.0276		.0473	
.953			-.0358				
.965	-.0604						

ARC11-716 IA14 D1+T12+S12N25+AT10 UPPER WING (RB1U32)

ALPHAD(4) = -4.310 BETAD (8) = 4.040

SECTION (1)UPPER WING DEPENDENT VARIABLE CP

X/CW \ Y/BW	.2990	.3640	.4270	.5340	.6730	.7800	.8870
.000	-.3087	.0021	.2634	.4244	.2966	.2081	.2418
.020				.4132	.3624	.3803	.3784
.025			.2786				
.040		.0843					
.045			.2455				
.050	-.1635			.2415	.2267	.2324	.2144
.080				.1138			
.085			.1701				
.086		.1530					
.094	-.1069						
.150				-.0423	-.0339	-.0254	-.0401
.163		.0000					
.177			.0283				
.193		.1369					
.229	.0235						
.250				-.1372	-.1720	-.1900	-.2588
.274			-.0454				
.339		-.0404					
.362	.1168						
.400				-.1031	-.1503		-.3596
.402			-.0921				
.497	.0000						
.550				-.0492	-.1399		
.565			.0000				
.600							-.3320
.650						-.2680	
.700	.0802				-.2117		
.725				-.1248			
.750						-.2171	-.1964
.760			-.1347				
.775				-.1181	-.1725		
.808			-.1117				
.834	-.1183						
.850				-.1359	-.1539	-.1251	
.857			-.1241				
.865	-.0768						
.900	-.1098			-.1325			.0150
.905			-.0858		-.0831		
.950				-.0778		.0005	
.953			-.0730				
.965	-.0925						

ARC11-716 IA14 O1+T12+S12N25+AT10 UPPER WING (RB1U32)

ALPHAO(4) = -4.220 BETAO (9) = 8.060

SECTION (1)UPPER WING DEPENDENT VARIABLE CP

Y/BW	.2990	.3640	.4270	.5340	.6730	.7800	.8870
X/CW							
.000	-.4285	-.0120	.1331	.2894	.2414	.1277	.1546
.020				.3437	.3540	.3749	.3639
.025			.1881				
.040		.0297					
.045			.1873				
.050	-.1722			.2331	.2493	.2512	.2326
.080				.1451			
.085			.1578				
.086		.1044					
.094	-.0974						
.150				.0340	.0262	.0401	.0105
.163		.0000					
.177			.0602				
.193		.1185					
.229	.0188						
.250				.0597	-.0824	-.1074	-.1385
.274			.0170				
.339		-.0088					
.362	.0913						
.400				-.0499	-.1054		-.2895
.402			-.0372				
.497	.0000						
.550				-.0584	-.1400		
.565			.0000				
.600							-.3463
.650						-.2696	
.700	.0931				-.2075		
.725				-.1580			
.750						-.2236	-.2520
.760			-.1661				
.775				-.1430	-.1021		
.808			-.1411				
.834	-.1274						
.850				-.1621	-.1757	-.1783	
.857			-.1847				
.865	-.1188						
.900	-.1658			-.1562			-.0537
.905			-.1264		-.1285		
.950				-.1161		-.0597	
.953			-.1007				
.965	-.1194						

ARC11-716 IA14 D1+T12+S12N25+AT10 UPPER WING (RB1U32)

ALPHAO(4) = -4.210 BETAO (10) = 10.100

SECTION (1)UPPER WING DEPENDENT VARIABLE CP

Y/BW	.2990	.3640	.4270	.5340	.6730	.7800	.8870
X/CW							
.000	-.4271	-.0362	.0938	.1915	.2261	.0960	.1215
.020				.3016	.3637	.3779	.3625
.025			.1624				
.040		.0020					
.045			.1624				
.050	-.2070			.2334	.2729	.2718	.2469
.080				.1710			
.085			.1616				
.086		.0926					
.094	-.1155						
.150				.0696	.0373	.0696	.0346
.163		.0000					
.177			.0704				
.193		.1090					
.229	.0043						
.250				-.0234	-.0521	-.0735	-.1593
.274			.0381				
.339		.0091					
.362	.0781						
.400				-.0459	-.0936		-.2693
.402			-.0274				
.497	.0000						
.550				-.0694	-.1368		
.563			.0000				
.600							-.3388
.650						-.2590	
.700	.0405				-.2100		
.725				-.1687			
.750						-.2148	-.2512
.760			-.1611				
.775				-.1570	-.1800		
.808			-.1490				
.834	-.1347						
.850				-.1760	-.1738	-.1743	
.857			-.1806				
.865	-.1313						
.900	-.1802			-.1695			-.0518
.905			-.1502		-.1268		
.950				-.1347		-.0580	
.953			-.1184				
.965	-.1305						

ARC11-716 IA14 O1+T12+S12N25+AT10 UPPER WING (RB1U32)

ALPHAO(5) = -2.920 BETAO (1) = -10.000

SECTION (1)UPPER WING DEPENDENT VARIABLE CP

Y/BW	.2990	.3640	.4270	.5340	.6730	.7800	.8670
X/CW							
.000	-.0687	.0503	.5774	.7163	.6711	.6317	.6594
.020				.4532	.4410	.4350	.4266
.025			.4112				
.040		.2685					
.045			.2969				
.050	-.0767			.1958	.1794	.1988	.1457
.080				.0014			
.085			.1133				
.086		.3113					
.094	-.0369						
.150				-.2435	-.2390	-.1880	-.1605
.163		.0000					
.177			-.1181				
.193		.1243					
.229	.0247						
.250				-.3820	-.4154	-.4103	-.3936
.274			-.2564				
.339		-.1979					
.362	.1362						
.400				-.5017	-.5801		-.6073
.402			-.4424				
.497	.0000						
.550				-.3010	-.6296		
.565			.0000				
.600							-.6181
.650						-.6112	
.700	.0047				-.1893		
.725				-.0628			
.750						-.3460	-.4331
.760			-.0441				
.775				.1253	.0058		
.808			.2303				
.834	.0393						
.850				.2207	.2127	-.2600	
.857			.2507				
.865	.1.28						
.900	.2213			.2354			-.2054
.905			.2530		.2163		
.950				.1998		-.0906	
.953			.2053				
.965	.1995						

ARC11-716 IA14 01 (12+S12N25+AT10 UPPER WING (RB1U32)

ALPHAO(5) = -2.930 BETAO (2) = -8.000

SECTION (1)UPPER WING DEPENDENT VARIABLE CP

X/CW \ Y/BW	.2990	.3640	.4270	.5340	.6730	.7800	.8870
.000	-.1071	.0130	.5469	.6830	.6233	.5861	.6174
.020				.4365	.4236	.4228	.4089
.025			.3908				
.040		.2031					
.045			.2733				
.050	-.1084			.1852	.1690	.1931	.1427
.080				-.0047			
.085			.1022				
.086		.2836					
.094	-.0717						
.150				-.2445	-.2313	-.1848	-.1616
.163		.0000					
.177			-.1205				
.193		.1101					
.229	-.0024						
.250				-.3700	-.4033	-.4006	-.3937
.274			-.2520				
.339		-.1949					
.362	.1216						
.400				-.4705	-.5551		-.6003
.402			-.3979				
.497	.0000						
.550				-.1597	-.5951		
.565			.0000				
.600							-.6315
.650						-.6029	
.700	.0596				-.1817		
.725				-.1017			
.750						-.3453	-.4020
.760			-.0896				
.775				.0646	.0800		
.808			.1376				
.834	-.0037						
.850				.1898	.1834	-.1349	
.857			.1999				
.855	.1463						
.900	.1624			.2177			-.1738
.905			.2214		.1871		
.950				.1864		.1775	
.953			.1853				
.965	.1734						

ARC11-716 TA14 D1+T12+S12N25+AT10 UPPER WING (RB1U32)

ALPHAO(5) = -2.930 BETAO (3) = -5.970

SECTION (1)UPPER WING DEPENDENT VARIABLE CP

X/CW \ Y/BW	.2990	.3640	.4270	.5340	.6730	.7800	.8870
.000	-.1224	-.0163	.5096	.6455	.5754	.5356	.5742
.020				.4257	.4065	.4093	.3982
.025			.3644				
.040		.1159					
.045			.2008				
.050	-.1385			.1851	.1665	.1884	.1381
.080				.0045			
.085			.0917				
.086		.2361					
.094	-.0835						
.150				-.2231	-.2197	-.1755	-.1620
.163		.0000					
.177			-.1017				
.193		.0956					
.229	-.0110						
.250				-.3361	-.3773	-.3855	-.3939
.274			-.2155				
.339		-.1701					
.362	.0994						
.400				-.4476	-.5316		-.5942
.402			-.3716				
.497	.0000						
.550				-.1063	-.5643		
.565			.0000				
.600							-.6196
.650						-.5886	
.700	.0937				-.1867		
.725				-.0803			
.750						-.2471	-.3297
.760			-.0852				
.775				-.0055	.0205		
.808			.0377				
.834	-.0295						
.850				.1172	.1324	.1414	
.857			.1110				
.865	.0814						
.900	.0742			.1841			-.1413
.905			.1794		.1670		
.950				.1663		.2133	
.953			.1577				
.965	.1350						

ARC11-716 IA14 O1+T12+S12N25+AT10 UPPER WING (RB1U32)

ALPHAO(5) = -2.910 BETAO (4) = -3.960

SECTION (1)UPPER WING DEPENDENT VARIABLE CP

Y/BW	.2990	.3640	.4270	.5340	.6730	.7800	.8870
X/CW							
.000	-.1221	-.0318	.4784	.6049	.5240	.4598	.5205
.020				.4165	.3781	.3856	.3856
.025			.3561				
.040		.0832					
.045			.2579				
.050	-.1637			.1898	.1535	.1757	.1333
.080				.0188			
.085			.1110				
.086		.2109					
.094	-.1043						
.150				-.2077	-.2227	-.1771	-.1639
.163		.0000					
.177			-.0841				
.193		.1037					
.229	-.0307						
.250				-.3311	-.3641	-.3765	-.3910
.274			-.2056				
.339		-.1642					
.362	.1063						
.400				-.4406	-.5105		-.5871
.402			-.3688				
.497	.0000						
.550				-.0467	-.2520		
.565			.0000				
.600							-.6075
.650						-.4334	
.700	.1050				-.1887		
.725				-.0765			
.750						.0392	-.2050
.760			-.0816				
.775				-.0433	-.0327		
.800			-.0015				
.834	-.0495						
.850				.0504	.1112	.1667	
.857			.0102				
.865	.0478						
.900	.0060			.1448			.0258
.905			.1032		.1515		
.950				.1510		.1849	
.953			.1297				
.965	.0902						

ARC11-716 IA14 01+T12+S12N25+AT10 UPPER WING (R51U32)

ALPHAO(5) = -2.910 BETAO (5) = -2.000

SECTION (1)UPPER WING DEPENDENT VARIABLE CP

Y/BW	.2990	.3640	.4270	.5340	.6730	.7800	.8670
X/CW							
.000	-.1411	-.0221	.4441	.5572	.4748	.3945	.4720
.020				.4024	.3615	.3546	.3703
.025			.3386				
.040		.0754					
.045			.2504				
.050	-.1957			.1845	.1492	.1560	.1247
.080				.0208			
.085			.1176				
.086		.1998					
.094	-.1296						
.150				-.1951	-.2087	-.1740	-.1545
.163		.0000					
.177			-.0737				
.193		.1050					
.229	-.0478						
.250				-.3078	-.3473	-.3638	-.3720
.274			-.1923				
.339		-.1582					
.362	.1019						
.400				-.4274	-.5027		-.5497
.402			-.3502				
.497	.0000						
.550				-.0155	-.0951		
.565			.0000				
.600							-.5592
.650						-.1659	
.700	.1050				-.1914		
.725				-.0768			
.750						-.0686	-.0842
.760			-.0866				
.775				-.0546	-.0847		
.808			-.0221				
.834	-.0670						
.850				-.0202	.0490	.1332	
.857			-.0138				
.865	.0304						
.900	-.0071			.0939			.1793
.905			.0673		.1359		
.950				.1295		.1589	
.953			.1018				
.965	.0328						

ARC11-716 IA14 D1+T12+S12N25+AT10 UPPER WING (RB1U32)

ALPHAD(5) = -2.910 BETAD (6) = .020

SECTION (1)UPPER WING DEPENDENT VARIABLE CP

X/CW \ Y/BW	.2990	.3640	.4270	.5340	.6730	.7800	.8870
.000	-.1882	-.0102	.4060	.5132	.4249	.3477	.4429
.020				.3873	.3443	.3495	.3761
.025			.3114				
.040		.1117					
.045			.2316				
.050	-.2175			.1803	.1548	.1596	.1547
.080				.0262			
.085			.1079				
.086		.1902					
.094	-.1328						
.150				-.1757	-.1852	-.1557	-.1201
.163		.0000					
.177			-.0646				
.193		.0965					
.229	-.0344						
.250				-.2816	-.3208	-.3044	-.3420
.274			-.1720				
.339		-.1431					
.362	.0985						
.400				-.3190	-.4055		-.5287
.402			-.2868				
.497	.0000						
.550				-.0088	-.0986		
.565			.0000				
.600							-.4371
.650						-.2293	
.700	.1014				-.2013		
.725				-.0975			
.750						-.1500	-.0531
.760			-.1011				
.775				-.0840	-.1332		
.808			-.0499				
.834	-.0862						
.850				-.0806	-.0703	.0514	
.857			-.0548				
.865	.0034						
.900	-.0414			-.0308			.1260
.905			-.0177		.0733		
.950				.0553		.1139	
.953			.0089				
.965	-.0300						

ARC11-716 IA14 O1+T12+S12N25+AT10 UPPER WING (RB1U32)

ALPHAD(5) = -2.910 BETAD (7) = 2.050

SECTION (1)UPPER WING DEPENDENT VARIABLE CP

Y/BW	.2990	.3640	.4270	.5340	.6730	.7800	.8870
X/CW							
.000	-.2549	-.0115	.3676	.4922	.3903	.3104	.3557
.020				.3770	.3343	.3376	.3546
.025			.2789				
.040		.0976					
.045			.2223				
.050	-.2214			.1864	.1553	.1607	.1466
.060				.0381			
.065			.1189				
.066		.1604					
.094	-.1427						
.150				-.1357	-.1594	-.1166	-.1033
.163		.0000					
.177			-.0352				
.193		.0989					
.229	-.0001						
.250				-.2889	-.2926	-.2999	-.3328
.274			-.1341				
.339		-.1066					
.362	.0918						
.400				-.2217	-.3035		-.5126
.492			-.2075				
.497	.0000						
.550				-.0704	-.1378		
.565			.0000				
.600							-.2684
.650						-.2600	
.700	.0809				-.2140		
.725				-.1477			
.750						-.1952	-.1069
.760			-.1237				
.775				-.1371	-.1557		
.808			-.0867				
.834	-.1152						
.850				-.1474	-.1297	-.0252	
.857			-.0980				
.865	-.0445						
.900	-.0872			-.1323			.0820
.905			-.0653		.0007		
.950				-.0631		.0679	
.953			-.0524				
.965	-.0763						

ARC11-716 IA14 D1+T12+S12N25+AT10 UPPER WING (RB1U32)

ALPHAD(5) = -2.920 BETAD (6) = 4.080

SECTION (1)UPPER WING DEPENDENT VARIABLE CP

Y/BW	.2990	.3640	.4270	.5340	.6730	.7800	.8870
X/CW							
.000	-.3297	-.0112	.2713	.4659	.3462	.2687	.3050
.020				.3651	.3179	.3220	.3335
.025			.2470				
.040		.0751					
.045			.2055				
.050	-.1993			.1842	.1573	.1606	.1419
.080				.0442			
.085			.1271				
.086		.1443					
.094	-.1257						
.150				-.1127	-.1320	-.0996	-.1064
.163		.0000					
.177			-.0150				
.193		.1169					
.229	.0230						
.250				-.2591	-.2537	-.2760	-.3263
.274			-.1153				
.339		-.0856					
.362	.1088						
.400				-.1757	-.2144		-.4634
.402			-.1381				
.497	.0000						
.550				-.0894	-.1562		
.565			.0000				
.600							-.3061
.650						-.2824	
.700	.0588				-.2212		
.725				-.1620			
.750						-.2171	-.1726
.760			-.1545				
.775				-.1550	-.1814		
.808			-.1218				
.834	-.1340						
.850				-.1739	-.1635	-.0920	
.857			-.1384				
.865	-.0874						
.900	-.1242			-.1720			.0327
.905			-.1096		-.0654		
.950				-.1217		.0178	
.953			-.1016				
.965	-.1133						

ARC11-716 IA14 01+T12+S12N25+AT10 UPPER WING (RB1U32)

ALPHAO(5) = -2.930 BETAO (9) = 6.070

SECTION (1)UPPER WING DEPENDENT VARIABLE CP

Y/BW	.2990	.3640	.4270	.5340	.6730	.7800	.8870
X/CW							
.000	-.4149	.0025	.1838	.4157	.3102	.2288	.2575
.020				.3187	.3027	.3207	.3306
.025			.1720				
.040		.0453					
.045			.1583				
.050	-.1933			.1691	.1570	.1740	.1537
.080				.0505			
.085			.1183				
.086		.1085					
.094	-.1210						
.150				-.0902	-.0987	-.0652	-.0826
.163		.0000					
.177			-.0001				
.193		.0941					
.229	.0450						
.250				-.1918	-.1958	-.2206	-.2870
.274			-.0868				
.339		-.0684					
.362	.0826						
.400				-.1105	-.1778		-.3781
.402			-.0860				
.497	.0000						
.550				-.0799	-.1744		
.565			.0000				
.600							-.3410
.650						-.2951	
.700	.0401				-.2277		
.725				-.1607			
.750						-.2320	-.2040
.760			-.1768				
.775				-.1447	-.1995		
.808			-.1405				
.834	-.1449						
.850				-.1659	-.1841	-.1306	
.857			-.1587				
.865	-.1202						
.900	-.1573			-.1610			.0007
.905			-.1291		-.1016		
.950				-.1167		-.0134	
.953			-.1239				
.965	-.1340						

ARC11-716 IA14 D1+T12+S12N25+AT1U UPPER WING (RB1U32)

ALPHAO(5) = -2.920 BETAO (10) = 0.110

SECTION (1)UPPER WING DEPENDENT VARIABLE CP

Y/BW	.2990	.3640	.4270	.5340	.6730	.7800	.8870
X/CW							
.000	-.4840	-.0157	.1379	.3168	.2957	.2022	.2312
.020				.2872	.3022	.3353	.3284
.025			.1456				
.040		.0244					
.045			.1441				
.050	-.2006			.1614	.1766	.1999	.1632
.080				.0583			
.085			.1113				
.086		.0796					
.094	-.1019						
.150				-.0522	-.0298	-.0352	-.0616
.163		.0000					
.177			.0134				
.193		.0922					
.229	.0257						
.250				-.0946	-.1601	-.1818	-.2578
.274			-.0527				
.339		-.0627					
.362	.0709						
.400				-.0831	-.1469		-.3464
.402			-.0745				
.497	.0000						
.550				-.0800	-.1687		
.565			.0000				
.600							-.3679
.650						-.2965	
.700	.0299				-.2237		
.725				-.1764			
.750						-.2456	-.2549
.760			-.1759				
.775				-.1575	-.2057		
.808			-.1504				
.834	-.1508						
.850				-.1780	-.1976	-.1833	
.857			-.1765				
.865	-.1349						
.900	-.1832			-.1686			-.0406
.905			-.1418		-.1393		
.950				-.1365		-.0567	
.953			-.1288				
.965	-.1458						

ARC11-716 IA14 O1+T12+S12N25+AT10 UPPER WING (RB1U32)

ALPHAO(5) = -2.900 BETAO (11) = 10.100

SECTION (1)UPPER WING DEPENDENT VARIABLE CP

X/CW \ Y/BW	.2990	.3640	.4270	.5340	.6730	.7800	.8870
.000	-.4754	-.0353	.1027	.2071	.2841	.1655	.1952
.020				.2249	.3248	.3332	.3294
.025			.1159				
.040		-.0010					
.045			.1159				
.050	-.2473			.1571	.2037	.2112	.1863
.080				.0905			
.085			.1153				
.086		.0646					
.094	-.1211						
.150				.0162	-.0114	.0085	-.0320
.163		.0000					
.177			.0233				
.193		.0941					
.229	.0109						
.250				-.0683	-.1042	-.1414	-.2330
.274			-.0079				
.339		-.0452					
.362	.0675						
.400				-.0735	-.1379		-.3213
.402			-.0582				
.497	.0000						
.550				-.0844	-.1661		
.565			.0000				
.600							-.3590
.650						-.2883	
.700	.0238				-.2245		
.725				-.1846			
.750						-.2415	-.2517
.760			-.1760				
.775				-.1654	-.2026		
.808			-.1611				
.834	-.1531						
.850				-.1843	-.1948	-.1825	
.857			-.1855				
.865	-.1409						
.900	-.1971			-.1711			-.0442
.905			-.1596		-.1320		
.950				-.1415		-.0548	
.953			-.1380				
.965	-.1508						

ARC11-716 IA14 O1+T12+S12N25+AT10 UPPER WING (RB1U32)

ALPHAD(6) = -.750 BETAD (1) = -10.040

SECTION (1)UPPER WING DEPENDENT VARIABLE CP

Y/BW	.2990	.3640	.4270	.5340	.6730	.7800	.8870
x/CW							
.000	.0546	.0588	.6021	.7729	.7454	.7166	.7239
.020				.3622	.3601	.3208	.2882
.025			.3492				
.043		.2494					
.045			.2199				
.050	-.0701			.1047	.0741	.0776	.0009
.080				-.1021			
.085			.0139				
.086		.2751					
.094	-.0605						
.150				-.3338	-.3512	-.2937	-.2666
.163		.0000					
.177			-.1926				
.193		.0679					
.229	-.0035						
.250				-.4732	-.5128	-.5122	-.4763
.274			-.3244				
.339		-.2475					
.362	.1132						
.400				-.5713	-.6735		-.6907
.402			-.5018				
.497	.0000						
.550				-.5625	-.7106		
.565			.0000				
.600							-.6657
.650						-.6790	
.700	-.1004				-.2302		
.725				-.0626			
.750						-.4408	-.5767
.760			-.0975				
.775				.0539	-.3911		
.808			.1305				
.834	-.0053						
.850				.1411	.0101	-.3456	
.857			.1812				
.865	.1433						
.900	.1531			.1714			-.3431
.905			.2111		.2217		
.950				.1479		-.2930	
.953			.1779				
.965	.1741						

ARC11-716 IA14 O1+T12+S12N25+AT10 UPPER WING (RB1U32)

ALPHAO(6) = -.740 BETAO (2) = -8.040

SECTION (1)UPPER WING DEPENDENT VARIABLE CP

Y/BW	.2990	.3640	.4270	.5340	.6730	.7800	.8870
X/CW							
.000	.0197	.0076	.5687	.7391	.7038	.6773	.6913
.020				.3460	.3464	.3068	.2805
.025			.3212				
.040		.1448					
.045			.1874				
.050	-.1184			.0876	.0653	.0705	-.0027
.080				-.1133			
.085			-.0012				
.086		.2349					
.094	-.0985						
.150				-.3383	-.3477	-.2947	-.2711
.163		.0000					
.177			-.1974				
.193		.0420					
.229	-.0399						
.250				-.4629	-.4945	-.5020	-.4739
.274			-.3200				
.339		-.2572					
.362	.0874						
.400				-.5137	-.6420		-.6740
.402			-.4331				
.497	.0000						
.550				-.4634	-.6615		
.565			.0000				
.600							-.6683
.650						-.6676	
.700	-.0500				-.2254		
.725				-.1360			
.750						-.4416	-.5852
.760			-.1262				
.775				-.0114	-.0226		
.808			.0523				
.834	-.0337						
.850				.0826	.1255	-.3359	
.857			.0956				
.865	.0758						
.900	.0562			.1346			-.3221
.905			.1652		.1690		
.950				.1289		-.2441	
.953			.1508				
.965	.1417						

ARC11-716 IA14 O1+T12+S12N25+AT10 UPPER WING (RB1U32)

ALPHA0(6) = -.720 BETA0 (3) = -5.990

SECTION (1)UPPER WING DEPENDENT VARIABLE CP

Y/BW	.2990	.3640	.4270	.5340	.6730	.7800	.8870
X/CW							
.000	-.0283	-.0335	.5284	.7013	.6613	.6332	.6520
.020				.3294	.3295	.2935	.2623
.025			.2911				
.040		.0703					
.045			.1751				
.050	-.1554			.0807	.0613	.0600	-.0126
.080				-.1108			
.085			-.0100				
.086		.1832					
.094	-.1292						
.150				-.3148	-.3428	-.2947	-.2761
.163		.0000					
.177			-.1818				
.193		.0274					
.229	-.0552						
.250				-.4046	-.4780	-.4929	-.4818
.274			-.2666				
.339		-.2095					
.362	.0640						
.400				-.5017	-.6110		-.6739
.402			-.4272				
.497	.0000						
.550				-.2734	-.6410		
.565			.0000				
.600							-.6651
.650						-.6543	
.700	-.0151				-.2053		
.725				-.1443			
.750						-.4327	-.5471
.760			-.1261				
.775				-.0558	-.0297		
.808			.0088				
.834	-.0505						
.850				.0270	.0750	-.3046	
.857			.0101				
.865	.0452						
.900	-.0043			.0967			-.2782
.905			.0955		.1271		
.950				.1189		-.0577	
.953			.1213				
.965	.0981						

ARC11-716 IA14 O1+T12+S12N25+AT10 UPPER WING (RB1U32)

ALPHAO(6) = -.710 BETAO (4) = -3.980

SECTION (1)UPPER WING DEPENDENT VARIABLE CP

Y/BW	.2990	.3640	.4270	.5340	.6730	.7800	.8870
X/CW							
.000	-.0760	-.0414	.4944	.6600	.6113	.5789	.6111
.020				.3220	.3135	.2832	.2544
.025			.2839				
.040		.0564					
.045			.1751				
.050	-.1944			.0851	.0568	.0589	-.0098
.080				-.1002			
.085			.0030				
.086		.1674					
.094	-.1512						
.150				-.3043	-.3329	-.2864	-.2721
.163		.0000					
.177			-.1580				
.193		.0425					
.229	-.0618						
.250				-.4229	-.4670	-.4731	-.4770
.274			-.2741				
.339		-.2159					
.362	.0726						
.400				-.5215	-.5877		-.6624
.402			-.4149				
.497	.0000						
.550				-.1846	-.6113		
.565			.0000				
.600							-.6562
.650						-.6254	
.700	.0301				-.2034		
.725				-.1397			
.750						-.4296	-.4109
.760			-.1153				
.775				-.0716	-.0174		
.808			-.0055				
.834	-.0652						
.850				-.0094	.0694	.0039	
.857			-.0026				
.865	.0249						
.900	-.0261			.0724			-.1983
.905			.0813		.1208		
.950				.0993		.1922	
.953			.0962				
.965	.0646						

ARC11-716 IA14 O1+T12+S12N25+AT10 UPPER WING (RB1U32)

ALPHAO(6) = -.700 BETAO (5) = -2.010

SECTION (1)UPPER WING DEPENDENT VARIABLE CP

Y/BW	.2990	.3640	.4270	.5340	.6730	.7800	.8670
X/CW							
.000	-.1344	-.0358	.4601	.6104	.5507	.5230	.5736
.020				.3200	.2991	.2761	.2510
.025			.2737				
.040		.0562					
.045			.1720				
.050	-.2252			.0920	.0570	.0606	-.0065
.080				-.0820			
.085			.0206				
.086		.1764					
.094	-.1677						
.150				-.2863	-.3009	-.2744	-.2646
.163		.0000					
.177			-.1466				
.193		.0524					
.229	-.0683						
.250				-.3912	-.4442	-.4570	-.4665
.274			-.2556				
.339		-.2042					
.362	.0788						
.400				-.5003	-.5722		-.6502
.402			-.4192				
.497	.0000						
.550				-.1485	-.4268		
.565			.0000				
.600							-.6450
.650						-.5470	
.700	.0486				-.2010		
.725				-.1005			
.750						-.1660	-.2861
.760			-.1054				
.775				-.0656	-.0523		
.808			-.0365				
.834	-.0794						
.850				-.0401	.0365	.1194	
.857			-.0478				
.865	.0106						
.900	-.0390			.0331			-.1047
.905			.0183		.0921		
.950				.0798		.1491	
.953			.0587				
.965	.0137						

ARC11-716 IA14 O1+T12+S12N25+AT10 UPPER WING (RB1U32)

ALPHAO(6) = -.690 BETAO (6) = .040

SECTION (11UPPER WING DEPENDENT VARIABLE CP

X/CW \ Y/BW	.2990	.3640	.4270	.5340	.6730	.7800	.8870
.000	-.1926	-.0470	.4142	.5628	.4943	.4724	.5270
.020				.2982	.2767	.2708	.2528
.025			.2476				
.040		.0846					
.045			.1549				
.050	-.2570			.0853	.0590	.0678	.0064
.080				-.0746			
.085			.0173				
.086		.1665					
.094	-.1795						
.150				-.2662	-.2786	-.2554	-.2496
.163		.0000					
.177			-.1339				
.193		.0480					
.229	-.0447						
.250				-.3942	-.3979	-.4340	-.4560
.274			-.2331				
.339		-.1923					
.362	.0764						
.400				-.4981	-.5348		-.6321
.402			-.3841				
.497	.0000						
.550				-.0927	-.1955		
.565			.0000				
.600							-.6121
.650						-.2667	
.700	.0584				-.2049		
.725				-.1405			
.750						-.0632	-.2224
.760			-.1267				
.775				-.1243	-.1116		
.808			-.0689				
.834	-.1016						
.850				-.1165	-.0231	.0699	
.857			-.0792				
.865	-.0225						
.900	-.0703			-.0665			.0364
.905			-.0419		.0691		
.950				.0143		.1228	
.953			-.0145				
.965	-.0566						

ARC11-716 IA14 01+T12+S12N25+A710 UPPER WING (RB1U32)

ALPHAD(6) = -.690 BETAD (7) = 2.030

SECTION (1)UPPER WING DEPENDENT VARIABLE CP

Y/BW	.2990	.3640	.4270	.5340	.6730	.7800	.8870
X/CW							
.000	-.2667	-.0642	.3587	.5430	.4607	.4136	.4707
.020				.2952	.2700	.2568	.2448
.025			.2118				
.040		.0814					
.045			.1393				
.050	-.2734			.1024	.0629	.0683	.0061
.080				-.0434			
.085			.0351				
.086		.1349					
.094	-.1664						
.150				-.2208	-.2579	-.2384	-.2444
.163		.0000					
.177			-.0900				
.193		.0465					
.229	-.0018						
.250				-.3168	-.3658	-.4048	-.4438
.274			-.1891				
.339		-.1361					
.362	.0661						
.400				-.3966	-.5065		-.6012
.402			-.3226				
.497	.0000						
.550				-.0663	-.1507		
.565			.0000				
.600							-.5770
.650						-.2244	
.700	.0406				-.2149		
.725				-.1262			
.750						-.1480	-.1563
.760			-.1425				
.775				-.1174	-.1528		
.808			-.0952				
.834	-.1236						
.850				-.1277	-.1029	.0210	
.857			-.1128				
.865	-.0558						
.900	-.1003			-.1104			.0801
.905			-.0890		.0169		
.950				-.0404		.0930	
.953			-.0735				
.965	-.0990						

ARC11-716 IA14 O1+T12+S12N25+AT10 UPPER WING (R81U32)

ALPHA(5) = -.710 BETAO (8) = 4.060

SECTION (1)UPPER WING DEPENDENT VARIABLE CP

Y/BW	.2990	.3640	.4270	.5340	.6730	.7800	.8870
X/CW							
.000	-.3457	-.0657	.2538	.5256	.4207	.3717	.4195
.020				.3017	.2537	.2351	.2294
.025			.1785				
.040		.0459					
.045			.1419				
.050	-.2704			.1076	.0589	.0586	.0041
.080				-.0332			
.085			.0711				
.086		.0976					
.094	-.1496						
.150				-.2031	-.2389	-.2331	-.2295
.163		.0000					
.177			-.0739				
.193		.0896					
.229	.0122						
.250				-.3315	-.3505	-.3809	-.4145
.274			-.1698				
.339		-.1152					
.362	.0807						
.400				-.3768	-.4532		-.5782
.402			-.2683				
.497	.0000						
.550				-.1158	-.1642		
.565			.0000				
.600							-.5124
.650						-.2631	
.700	.0220				-.2194		
.725				-.1738			
.750						-.1942	-.1036
.760			-.1799				
.775				-.1647	-.1787		
.808			-.1276				
.834	-.1464						
.850				-.1825	-.1528	-.0303	
.857			-.1454				
.865	-.0964						
.900	-.1376			-.1827			.0728
.905			-.1258		-.0336		
.950				-.1385		.0580	
.953			-.1175				
.965	-.1283						

ARC11-716 IA14 D1+T12+S12N25+AT10 UPPER WING (RB1U32)

ALPHAO(6) = -.720 BETAO (9) = 6.080

SECTION (1)UPPER WING DEPENDENT VARIABLE CP

Y/BW	.2990	.3640	.4270	.5340	.6730	.7800	.8870
X/CW							
.000	-.4448	-.0370	.1828	.4827	.3936	.3277	.3750
.020				.2649	.2512	.2336	.2351
.025			.1295				
.040		.0030					
.045			.1060				
.050	-.2462			.0927	.0711	.0637	.0331
.080				-.0365			
.085			.0599				
.086		.0529					
.094	-.1508						
.150				-.1774	-.2106	-.2017	-.1872
.163		.0000					
.177			-.0503				
.193		.0853					
.229	.0070						
.250				-.2686	-.3307	-.3334	-.3792
.274			-.1400				
.339		-.0911					
.362	.0839						
.400				-.1724	-.2410		-.5244
.402			-.1669				
.497	.0000						
.550				-.1020	-.1890		
.565			.0000				
.600							-.3199
.650						-.2934	
.700	.0142				-.2246		
.725				-.1714			
.750						-.2219	-.1624
.760			-.1915				
.775				-.1473	-.1960		
.808			-.1467				
.834	-.1557						
.850				-.1649	-.1737	-.0959	
.857			-.1601				
.865	-.1236						
.900	-.1637			-.1603			.0254
.905			-.1383		-.0736		
.950				-.1269		.0133	
.953			-.1308				
.965	-.1402						

ARC11-716 IA14 D1+T12+S12N25+AT10 UPPER WING (RB1U32)

ALPHAO(6) = -.730 BETAO (10) = 8.100

SECTION (1)UPPER WING DEPENDENT VARIABLE CP

Y/BW	.2990	.3640	.4270	.5340	.6730	.7800	.8670
X/CW							
.000	-.5576	-.0248	.1279	.2855	.3743	.3109	.3413
.020				.2071	.2530	.2371	.2368
.025			.1022				
.040		.0120					
.045			.0870				
.050	-.2996			.0978	.0825	.0833	.0524
.080				-.0012			
.085			.0557				
.086		.0287					
.094	-.1573						
.150				-.1202	-.1727	-.1355	-.1581
.163		.0000					
.177			-.0320				
.193		.0057					
.229	.0459						
.250				-.2064	-.2316	-.2678	-.3525
.274			-.1065				
.339		-.0908					
.362	.0664						
.400				-.1138	-.1932		-.4392
.402			-.1142				
.497	.0000						
.550				-.1032	-.2023		
.565			.0000				
.600							-.3783
.650						-.3220	
.700	.0161				-.2282		
.725				-.1942			
.750						-.2598	-.2312
.760			-.1863				
.775				-.1695	-.2199		
.808			-.1574				
.834	-.1643						
.850				-.1860	-.2010	-.1629	
.857			-.1766				
.865	-.1356						
.900	-.1821			-.1772			-.0130
.905			-.1534		-.1240		
.950				-.1512		-.0295	
.955			-.1472				
.965	-.1632						

ARC11-716 IA14 O1+T12+S12N25+AT10 UPPER WING (RB1U32)

ALPHA0(6) = -.740 BETA0 (11) = 10.160

SECTION: (1)UPPER WING DEPENDENT VARIABLE CP

Y/BW	.2990	.3640	.4270	.5340	.6730	.7800	.8870
X/CW							
.000	-.5527	-.0537	.0834	.2046	.3100	.2873	.2901
.020				.1321	.2436	.2529	.2444
.025			.0685				
.040		-.0160					
.045			.0487				
.050	-.3269			.0569	.1017	.1184	.0671
.080				.0004			
.085			.0456				
.086		-.0021					
.094	-.1600						
.150				-.0672	-.0942	-.1038	-.1353
.163		.0000					
.177			-.0240				
.193		.0833					
.229	.0094						
.250				-.1204	-.1812	-.2438	-.3189
.274			-.0811				
.339		-.0865					
.362	.0598						
.400				-.1106	-.2051		-.3972
.402			-.0917				
.497	.0000						
.550				-.1114	-.1960		
.565			.0000				
.600							-.3595
.650						-.3048	
.700	-.0011				-.2308		
.725				-.1986			
.750						-.2495	-.2156
.760			-.1887				
.775				-.1816	-.2134		
.808			-.1659				
.834	-.1750						
.850				-.1924	-.1965	-.1388	
.857			-.1892				
.865	-.1525						
.900	-.2009			-.1695			-.0090
.909			-.1698		-.1081		
.950				-.1473		-.0263	
.953			-.1460				
.955	-.1766						

ARC11-716 IA14 OI+T12+S12N25+AT10 UPPER WING (RB1U32)

ALPHAO(7) = 2.930 BETAO (1) = -10.000

SECTION (1)UPPER WING DEPENDENT VARIABLE CP

Y/BW	.2990	.3640	.4270	.5340	.6730	.7800	.8870
X/CW							
.000	.0629	.0628	.5946	.7844	.7697	.7367	.7223
.020				.2199	.2287	.1420	.0911
.025			.2458				
.040		.1681					
.045			.0971				
.050	-.0575			-.0409	-.0781	-.0787	-.1854
.080				-.2318			
.085			-.0948				
.086		.2045					
.094	-.0824						
.150				-.4804	-.4746	-.4273	-.4095
.163		.0000					
.177			-.2882				
.193		-.0272					
.229	-.0550						
.250				-.5690	-.6369	-.6139	-.5779
.274			-.4160				
.339		-.3222					
.362	.0712						
.400				-.6525	-.7719		-.7512
.402			-.5565				
.497	.0000						
.550				-.6494	-.7625		
.565			.0000				
.600							-.7115
.650						-.7339	
.700	-.2342				-.2372		
.725				-.0931			
.750						-.5281	-.6009
.760			-.1632				
.775				.0255	-.4864		
.800			.0259				
.834	-.0167						
.850				.0515	-.3485	-.4377	
.857			.0715				
.865	.0938						
.900	.0428			.0838			-.4258
.905			.1200		-.0158		
.950				.0784		-.3734	
.953			.1272				
.965	.1[illegible]04						

ARC11-716 IA14 O1+T12+S12N25+AT10 UPPER WING (RB1U32)

ALPHA0(7) = 2.060 BETA0 (2) = -8.030

SECTION (1)UPPER WING DEPENDENT VARIABLE CP

Y/BW	.2990	.3640	.4270	.5340	.6730	.7800	.8870
X/CW							
.000	.0197	-.0174	.5605	.7573	.7366	.7052	.6905
.020				.2077	.2096	.1239	.0665
.025			.2204				
.040		.1036					
.045			.0754				
.050	-.1029			-.0555	-.0884	-.0957	-.2029
.080				-.2434			
.085			-.1189				
.086		.1486					
.094	-.1136						
.150				-.4840	-.4785	-.4302	-.4192
.163		.0000					
.177			-.3037				
.193		-.0435					
.229	-.0725						
.250				-.5791	-.6347	-.6143	-.5783
.274			-.4309				
.339		-.3365					
.362	.0521						
.400				-.6515	-.7604		-.7496
.402			-.5653				
.497	.0000						
.550				-.5620	-.7635		
.565			.0000				
.600							-.7204
.650						-.7453	
.700	-.1439				-.2310		
.725				-.1464			
.750						-.5232	-.6140
.760			-.1636				
.775				-.0288	-.4179		
.808			.0125				
.834	-.0250						
.850				.0193	-.0131	-.4219	
.857			.0335				
.865	.0639						
.900	.0038			.0419			-.4166
.905			.0602		.1415		
.950				.0350		-.3865	
.953			.0787				
.965	.0870						

DATE 10 JAN 75 TABULATED PRESSURE DATA - IA14A - VOL. 6 (RB1U32)

ARC11-716 IA14 01+T12+S12N25+AT10 UPPER WING

ALPHAO(7) = 2.080 BETAO (3) = -5.990

SECTION (1)UPPER WING DEPENDENT VARIABLE CP

Y/BW	.2990	.3640	.4270	.5340	.6730	.7800	.8870
X/CW							
.000	-.0070	-.0466	.5264	.7307	.7047	.6743	.6594
.020				.1987	.2039	.1130	.0454
.025			.2035				
.040		.0394					
.045			.0663				
.050	-.1375			-.0572	-.0894	-.0981	-.2098
.080				-.2435			
.085			-.1125				
.086		.1178					
.094	-.1421						
.150				-.4660	-.4692	-.4271	-.4216
.163		.0000					
.177			-.2914				
.193		-.0445					
.229	-.0822						
.250				-.5406	-.6199	-.6073	-.5817
.274			-.3797				
.339		-.2934					
.362	.0406						
.400				-.5963	-.7307		-.7496
.402			-.5038				
.497	.0000						
.550				-.5166	-.7367		
.565			.0000				
.600							-.7191
.650						-.7397	
.700	-.1153				-.2271		
.725				-.1493			
.750						-.5295	-.6096
.760			-.1572				
.775				-.0727	-.2740		
.800			-.0059				
.834	-.0463						
.850				-.0306	.0506	-.4349	
.857			-.0120				
.865	.0380						
.900	-.0315			.0051			-.4097
.905			.0180		.0924		
.950				.0090		-.3648	
.953			.0293				
.965	-.0205						

ARC11-716 IA14 D1+T12+S1?N25+AT1D UPPER WING (RB1U32)

ALPHA(1 7) = 1.940 BETA(1 4) = -4.010

SECTION (1)UPPER WING DEPENDENT VARIABLE CP

Y/BW	.2990	.3640	.4270	.5340	.6730	.7800	.8870
X/CW							
.000	-.0610	-.0656	.4942	.7010	.6657	.6316	.6225
.020				.2086	.2088	.1193	.0536
.025			.2063				
.040		.0176					
.045			.0760				
.050	-.1864			-.0368	-.0754	-.0901	-.1975
.080				-.2124			
.085			-.0834				
.086		.1122					
.094	-.1885						
.150				-.4105	-.4452	-.4086	-.4133
.163		.0000					
.177			-.2439				
.193		-.0189					
.229	-.0952						
.250				-.5040	-.5902	-.5939	-.5755
.274			-.3517				
.339		-.2751					
.362	.0539						
.400				-.5753	-.7085		-.7457
.402			-.4910				
.497	.0000						
.550				-.4048	-.7120		
.565			.0000				
.600							-.7126
.650						-.7305	
.700	-.0848				-.2203		
.725				-.1665			
.750						-.5205	-.5894
.760			-.1609				
.775				-.1182	-.0939		
.808			-.0183				
.834	-.0685						
.850				-.0536	.0120	-.3841	
.857			-.0496				
.865	.0094						
.900	-.0527			-.0067			-.3780
.905			-.0230		.0547		
.950				.0178		-.2019	
.953			-.0027				
.965	-.0514						

ARC11-716 IA14 O1+T12+S12N25+AT1D UPPER WING (RB1U32)

ALPHAO(7) = 1.950 BETAO (5) = -2.000

SECTION (1)UPPER WING DEPENDENT VARIABLE CP

Y/BW	.2990	.3640	.4270	.5340	.6730	.7800	.8870
X/CW							
.000	-.1263	-.0924	.4490	.6459	.6157	.5885	.5934
.020				.1963	.1992	.1224	.0565
.025			.1893				
.040		.0224					
.045			.0733				
.050	-.2394			-.0352	-.0699	-.0862	-.1878
.060				-.2009			
.085			-.0761				
.086		.1330					
.094	-.2280						
.150				-.3848	-.4312	-.3952	-.4027
.163		.0000					
.177			-.2279				
.193		-.0146					
.229	-.0924						
.250				-.5218	-.5571	-.5772	-.5662
.274			-.3360				
.339		-.2651					
.362	.0543						
.400				-.5951	-.6727		-.7375
.402			-.4777				
.497	.0000						
.550				-.2925	-.6667		
.565			.0000				
.600							-.7006
.650						-.6949	
.700	-.0918				-.2026		
.725				-.2086			
.750						-.4874	-.5544
.760			-.1637				
.775				-.1194	-.1219		
.808			-.0427				
.834	-.0800						
.850				-.0730	-.0058	-.2530	
.857			-.0667				
.865	-.0126						
.900	-.0601			-.0298			-.3188
.905			-.0391		.0585		
.950				.0035		.0389	
.953			-.0065				
.965	-.0580						

ARC11-716 IA14 D1+T12+S12N25+AT10 UPPER WING (RB1U32)

A FMAD(7) = 1.950 BETAO (6) = .040

SECTION (1)UPPER WING DEPENDENT VARIABLE CP

Y/SW	.2990	.3640	.4270	.5340	.6730	.7800	.8870
X/CW							
.000	-.2107	-.1235	.4017	.5933	.5671	.5444	.5630
.020				.1771	.1772	.1129	.0619
.025			.1611				
.040		.0341					
.045			.0543				
.050	-.2705			-.0427	-.0806	-.0869	-.1764
.080				-.2043			
.085			-.0950				
.086		.1172					
.094	-.2431						
.150				-.3768	-.4244	-.3893	-.3911
.163		.0000					
.177			-.2215				
.193		-.0192					
.229	-.0549						
.250				-.4568	-.5349	-.5644	-.5616
.274			-.3224				
.339		-.2608					
.362	.0500						
.400				-.5275	-.6248		-.7293
.402			-.4585				
.497	.0000						
.550				-.2008	-.6160		
.565			.0000				
.600							-.6962
.650						-.6738	
.700	-.0067				-.2105		
.725				-.1444			
.750						-.2815	-.5099
.760			-.1726				
.775				-.1120	-.1115		
.808			-.0844				
.834	-.1049						
.850				-.1045	-.0287	.0232	
.857			-.1096				
.865	-.0436						
.900	-.0982			-.0737			-.2651
.905			-.0912		.0392		
.950				-.0196		.0839	
.953			-.0667				
.965	-.1074						

ARC11-716 IA14 O1+T12+S12N25+AT10 UPPER WING (RB1U32)

ALPHAO(7) = 1.930 BETAO (7) = 2.030

SECTION (1)UPPER WING DEPENDENT VARIABLE CP

Y/BW	.2990	.3640	.4270	.5340	.6730	.7800	.8870
X/CW							
.000	-.2907	-.1751	.3194	.5606	.5310	.5025	.5267
.020				.1598	.1720	.1181	.0673
.025			.1182				
.040		.0348					
.045			.0301				
.050	-.3124			-.0430	-.0700	-.0737	-.1633
.080				-.1890			
.085			-.1003				
.086		.0851					
.094	-.2326						
.150				-.3425	-.3938	-.3720	-.3756
.163		.0000					
.177			-.2073				
.193		-.0158					
.229	-.0133						
.250				-.4247	-.4898	-.5266	-.5496
.274			-.2476				
.339		-.2382					
.362	.0345						
.400				-.4832	-.5755		-.7071
.402			-.3735				
.497	.0000						
.550				-.1757	-.5223		
.565			.0000				
.600							-.6795
.650						-.5865	
.700	-.0192				-.2122		
.725				-.1638			
.750						-.1572	-.4329
.760			-.1936				
.775				-.1556	-.1504		
.806			-.1109				
.834	-.1346						
.850				-.1601	-.0889	.0092	
.857			-.1400				
.865	-.0845						
.900	-.1331			-.1442			-.1664
.905			-.1289		.0073		
.950				-.0871		.0766	
.955			-.1201				
.965	-.1431						

ARC11-716 IA14 D1+T12+S12N25+AT10 UPPER WING (RB1U32)

ALPHAO(7) = 1.930 BETAO (8) = 4.070

SECTION (1)UPPER WING DEPENDENT VARIABLE CP

Y/BW	.2990	.3640	.4270	.5340	.6730	.7800	.8870
X/CW							
.000	-.3822	-.1373	.2054	.5535	.4916	.4545	.4866
.020				.1821	.1635	.1007	.0561
.025			.0708				
.040		-.0118					
.045			.0252				
.050	-.3363			-.0098	-.0703	-.0375	-.1632
.080				-.1571			
.085			-.0314				
[illegible]		.0435					
.094	-.2011						
.150				-.3054	-.3612	-.3618	-.3709
.163		.0000					
.177			-.1466				
.193		.0057					
.229	.0036						
.250				-.3682	-.4547	-.5068	-.5377
.274			-.2274				
.339		-.1632					
.362	.0237						
.400				-.4397	-.5633		-.6919
.402			-.3470				
.497	.0000						
.550				-.1415	-.2932		
.565			.0000				
.600							-.6554
[illegible]						-.3473	
[illegible]	-.0299				-.2191		
[illegible]				-.1674			
.750						-.1377	-.3037
.760			-.2062				
.775				-.1555	-.1783		
.808			-.1401				
.834	-.1632						
.850				-.1648	-.1271	.0005	
.857			-.1670				
.865	-.1205						
.900	-.1713			-.1607			-.0416
.905			-.1569		-.0234		
.950				-.1149		.0671	
.953			-.1509				
.965	-.1632						

ARC11-716 IA14 O1+T12+S12N25+AT13 UPPER WING (RB1U32)

ALPHAO(7) = 1.960 BETAO (9) = 6.100

SECTION (1)UPPER WING DEPENDENT VARIABLE CP

Y/BW	.2990	.3640	.4270	.5340	.6730	.7800	.8670
X/CW							
.000	-.4950	-.0895	.1294	.4504	.4669	.4215	.4578
.020				.1458	.1509	.1027	.0643
.025			.0478				
.040		-.0022					
.045			.0184				
.050	-.3320			-.0171	-.0658	-.0781	-.1456
.080				-.1428			
.085			-.0227				
.086		.0004					
.094	-.1953						
.150				-.2701	-.3565	-.3360	-.3476
.163		.0000					
.177			-.1164				
.193		.0292					
.229	.0249						
.250				-.3447	-.4206	-.4777	-.5139
.274			-.1964				
.339		-.1526					
.362	.0480						
.400				-.3204	-.5075		-.6616
.402			-.2458				
.497	.0000						
.550				-.1359	-.2181		
.565			.0000				
.600							-.5620
.650						-.2914	
.700	-.0295				-.2306		
.725				-.1899			
.750						-.2077	-.1717
.760			-.2127				
.775				-.1697	-.2053		
.808			-.1617				
.834	-.1846						
.850				-.1793	-.1689	-.0538	
.857			-.1816				
.865	-.1418						
.900	-.1833			-.1705			.0209
.905			-.1647		-.0525		
.950				-.1379		.0382	
.953			-.1580				
.965	-.1654						

ARC11-716 IA14 O1+T12+S12N25+AT10 UPPER WING (RB1U32)

ALPHAD(7) = 1.950 BETAD (10) = 8.100

SECTION (1)UPPER WING DEPENDENT VARIABLE CP

Y/BW	.2990	.3640	.4270	.5340	.6730	.7800	.8870
X/CW							
.000	-.6199	-.0426	.0947	.2302	.4449	.3966	.4228
.020				.0426	.1572	.0929	.0583
.025			.0457				
.040		-.0004					
.045			.0192				
.050	-.3841			-.0496	-.0468	-.0730	-.1453
.080				-.1212			
.085			-.0210				
.086		-.0004					
.094	-.2084						
.150				-.2189	-.3026	-.3237	-.3417
.163		.0000					
.177			-.1149				
.193		.0295					
.229	.0447						
.250				-.2907	-.3946	-.4551	-.4982
.274			-.1857				
.339		-.1505					
.362	.0413						
.400				-.2028	-.3062		-.6166
.402			-.1849				
.497	.0000						
.550				-.1513	-.2477		
.565			.0000				
.600							-.4167
.650						-.3517	
.700	-.0282				-.2345		
.725				-.2173			
.750						-.2726	-.2320
.760			-.2178				
.775				-.2012	-.2397		
.808			-.1859				
.834	-.2022						
.850				-.2059	-.2080	-.1347	
.857			-.2037				
.865	-.1646						
.900	-.2061			-.1901			-.0266
.905			-.1837		-.1042		
.950				-.1619		-.0251	
.955			-.1780				
.965	-.1946						

ARC11-716 IA14 D1+T12+S12N25+AT10 UPPER WING (RB1U32)

ALPHAO(7) = 1.940 BETAO (11) = 10.140

SECTION (1)UPPER WING DEPENDENT VARIABLE CP

Y/BW	.2990	.3640	.4270	.5340	.6730	.7800	.8870
X/CW							
.000	-.5716	-.0646	.0492	.1642	.2913	.3600	.3788
.020				.0202	.0837	.0791	.0509
.025			.0292				
.040		-.0249					
.045			.0065				
.050	-.4086			-.0457	-.0711	-.0767	-.1434
.080				-.0975			
.085			-.0284				
.086		-.0334					
.094	-.2580						
.150				-.1694	-.2627	-.3047	-.3257
.163		.0000					
.177			-.1062				
.193		.0463					
.229	.0209						
.250				-.2420	-.3458	-.4239	-.4739
.274			-.1575				
.339		-.1250					
.362	.0464						
.400				-.1720	-.2544		-.5321
.402			-.1888				
.497	.0000						
.550				-.1593	-.2430		
.565			.0000				
.600							-.3583
.650						-.3498	
.700	-.0270				-.2355		
.725				-.2301			
.750						-.2695	-.2057
.760			-.2224				
.775				-.2399	-.2430		
.808			-.2058				
.834	-.2059						
.850				-.2329	-.2043	-.1179	
.857			-.2329				
.865	-.1888						
.900	-.2466			-.1955			-.0072
.905			-.1928		-.1157		
.950				-.1616		-.0304	
.953			-.1636				
.965	-.2010						

ARC11-716 IA14 D1+T12+S12N25+AT10 UPPER WING (RB1U32)

ALPHAO(8) = 3.970 BETAO (1) = -9.990

SECTION (1)UPPER WING DEPENDENT VARIABLE CP

Y/BW	.2990	.3640	.4270	.5340	.6730	.7800	.8870
X/CW							
.000	.0689	.0400	.5671	.7703	.7668	.7165	.6837
.020				.1053	.1249	-.0002	-.0676
.025			.1543				
.040		.1393					
.045			.0146				
.050	-.0438			-.1415	-.1920	-.2001	-.3179
.080				-.3219			
.085			-.1907				
.086		.1532					
.094	-.0902						
.150				-.5666	-.5540	-.5288	-.5114
.163		.0000					
.177			-.3700				
.193		-.0809					
.229	-.0651						
.250				-.7035	-.7030	-.6909	-.6494
.274			-.4825				
.339		-.3710					
.362	.0538						
.400				-.7707	-.8105		-.7580
.402			-.5987				
.497	.0000						
.550				-.7744	-.7926		
.565			.0000				
.600							-.7169
.650						-.6741	
.700	-.3731				-.2452		
.725				-.2485			
.750						-.5426	-.5838
.760			-.2091				
.775				-.0993	-.5450		
.808			.0090				
.834	-.0084						
.850				-.0011	-.4038	-.4535	
.857			.0605				
.865	.1001						
.900	.0377			.0272			- 5507
.905			.0988		-.3732		
.950				.0157		-.3986	
.953			.1029				
.965	.1066						

ARC11-716 IA14 D1+T12+S12N25+AT10 UPPER WING (RB1U32)

ALPHAD(8) = 3.990 BETAD (2) = -8.000

SECTION (1)UPPER WING DEPENDENT VARIABLE CP

Y/BW	.2990	.3610	.4270	.5340	.6730	.7800	.8870
X/CW							
.000	.0287	-.0311	.5402	.7453	.7293	.6806	.6494
.020				.0974	.1115	-.0132	-.0899
.025			.1391				
.040		.0592					
.045			-.0092				
.050	-.0771			-.1491	-.1970	-.2111	-.3336
.080				-.3279			
.085			-.2096				
.086		.0997					
.094	-.1196						
.150				-.5692	-.5581	-.5344	-.5222
.153		.0000					
.177			-.3747				
.193		-.0944					
.229	-.1012						
.250				-.6973	-.7071	-.6894	-.6573
.274			-.4827				
.339		-.3744					
.362	.0375						
.400				-.7671	-.8285		-.8138
.402			-.6008				
.497	.0000						
.550				-.6748	-.7882		
.565			.0000				
.600							-.7706
.650						-.7745	
.700	-.3202				-.2490		
.725				-.1685			
.750						-.5787	-.6110
.760			-.2301				
.775				-.0896	-.5781		
.808			-.0317				
.834	-.0341						
.850				-.0567	-.4437	-.4762	
.857			-.0065				
.865	.0401						
.900	-.0194			-.0372			-.4275
.905			.0256		-.0577		
.950				-.0470		-.4235	
.953			.0187				
.965	-.0173						

ARC11-716 IA14 DI+T12+S12N25+AT10 UPPER WING (RB1U32)

ALPHAD(8) = 3.970 BETAD (3) = -6.020

SECTION (1)UPPER WING DEPENDENT VARIABLE CP

Y/BW	.2990	.3640	.4270	.5340	.6730	.7800	.8870
X/CW							
.000	-.0122	-.0933	.4991	.7185	.6924	.6408	.6167
.020				.0940	.1043	-.0200	-.1021
.025			.1222				
.040		-.0005					
.045			-.0212				
.050	-.1205			-.1512	-.1955	-.2153	-.3399
.060				-.3267			
.085			-.2142				
.086		.0503					
.094	-.1614						
.150				-.5557	-.5504	-.5269	-.5270
.163		.0000					
.177			-.3654				
.193		-.0997					
.229	-.1208						
.250				-.6566	-.6885	-.6839	-.6609
.274			-.4369				
.339		-.3312					
.362	.0224						
.400				-.6984	-.8088		-.8134
.402			-.5233				
.497	.0000						
.550				-.6603	-.7902		
.565			.0000				
.600							-.7724
.650						-.7854	
.700	-.2781				-.2450		
.725				-.2303			
.750						-.5876	-.6384
.760			-.2185				
.775				-.1536	-.4853		
.808			-.0382				
.834	-.0502						
.850				-.0990	-.1364	-.4972	
.857			-.0403				
.865	.0077						
.900	-.0564			-.0687			-.4550
.905			-.0208		.0242		
.950				-.0575		-.4479	
.955			-.0193				
.965	-.0815						

ARC11-716 IA14 O1+T12+S12N25+AT10 UPPER WING (881032)

ALPHAD(8 = 3.930 BETAD (4) = -3.990

SECTION (1)UPPER WING DEPENDENT VARIABLE CP

Y/BW	.2990	.3640	.4270	.5340	.6730	.7800	.8870
X/CW							
.000	-.0669	-.1326	.4656	.6964	.6629	.6129	.5880
.020				.1057	.1138	-.0083	-.0971
.025			.1201				
.040		-.0304					
.045			-.0129				
.050	-.1704			-.1308	-.1788	-.1975	-.3308
.080				-.3026			
.085			-.1809				
.086		.0516					
.094	-.2016						
.150				-.5163	-.5284	-.5137	-.5212
.163		.0000					
.177			-.3066				
.193		-.0687					
.229	-.1278						
.250				-.6115	-.6729	-.6707	-.6593
.274			-.4075				
.339		-.3141					
.362	.0388						
.400				-.6747	-.7767		-.8056
.402			-.5400				
.497	.0000						
.550				-.6611	-.7700		
.565			.0000				
.600							-.7632
.650						-.7758	
.700	-.2330				-.2387		
.725				-.2204			
.750						-.5770	-.6088
.760			-.2024				
.775				-.1548	-.4048		
.808			-.0370				
.834	-.0685						
.850				-.1143	-.0571	-.4958	
.857			-.0594				
.865	-.0147						
.900	-.0776			-.0793			-.4374
.905			-.0423		.0253		
.950				-.0607		-.4280	
.953			-.0408				
.965	-.0970						

ARC11-716 IA14 O1+T12+S12N25+AT10 UPPER WING (RB1U32)

ALPHAD(8) = 3.930 BETAD (5) = -2.000

SECTION (1)UPPER WING DEPENDENT VARIABLE CP

Y/BW	.2990	.3640	.4270	.5340	.6730	.7800	.8870
X/CW							
.000	-.1338	-.1875	.4244	.6591	.6259	.5790	.5582
.020				.1060	.1101	-.0041	-.0970
.025			.1201				
.040		-.0256					
.045			-.0078				
.050	-.2183			-.1248	-.1733	-.1947	-.3245
.080				-.2921			
.085			-.1486				
.086		.0856					
.094	-.2449						
.150				-.4767	-.5180	-.4998	-.5120
.163		.0000					
.177			-.2894				
.193		-.0520					
.229	-.1058						
.250				-.5486	-.6533	-.6591	-.6508
.274			-.3871				
.333		-.2988					
.362	.0448						
.400				-.6114	-.7486		-.7938
.492			-.5226				
.497	.0000						
.550				-.5050	-.7405		
.565			.0000				
.600							-.7503
.650						-.7533	
.700	-.2095				-.2388		
.725				-.1881			
.750						-.5609	-.5766
.760			-.1871				
.775				-.1452	-.1432		
.808			-.0485				
.834	-.0859						
.850				-.0920	-.0305	-.4603	
.857			-.0734				
.865	-.0313						
.900	-.0903			-.0478			-.3860
.905			-.0577		.0203		
.50				-.0295		-.3398	
.933			-.0473				
.965	-.0970						

ARC11-716 IA14 01+T12+S12N25+AT10 UPPER WING (RB1U32)

ALPHAD(8) = 3.940 BETAD (6) = .040

SECTION (1)UPPER WING DEPENDENT VARIABLE CP

Y/BW	.2990	.3640	.4270	.5340	.6730	.7800	.8870
X/CW							
.000	-.2089	-.2318	.3726	.5993	.5814	.5390	.5341
.020				.0848	.0984	-.0051	-.0916
.025			.0886				
.040		-.0106					
.045			-.0222				
.050	-.2689			-.1370	-.1768	-.1957	-.3130
.080				-.2936			
.095			-.1622				
.086		.0868					
.094	-.2714						
.150				-.4541	-.5051	-.4838	-.5002
.163		.0000					
.177			-.2814				
.193		-.0543					
.229	-.0663						
.250				-.5675	-.6267	-.6419	-.6369
.274			-.3727				
.339		-.2983					
.362	.0397						
.400				-.6266	-.7105		-.7825
.402			-.5009				
.497	.0000						
.550				-.3076	-.6903		
.565			.0000				
.600							-.7386
.650						-.7540	
.700	-.1169				-.2112		
.725				-.2439			
.750						-.5745	-.5640
.760			-.2024				
.775				-.1850	-.1398		
.808			-.0848				
.834	-.0967						
.850				-.1323	-.0741	-.3358	
.857			-.1164				
.865	-.0626						
.900	-.1239			-.1058			-.3672
.905			-.1056		-.0024		
.950				-.0753		-.0578	
.953			-.0986				
.965	-.1375						

ARC11-716 IA14 O1+T12+S12N25+AT10 UPPER WING (RB1U32)

ALPHAD(8) = 4.030 BETAD (7) = 2.050

SECTION (1)UPPER WING DEPENDENT VARIABLE CP

Y/BW	.2990	.3640	.4270	.5340	.6730	.7800	.8870
X/CW							
.000	-.3044	-.2810	.2724	.5640	.5510	.5099	.5050
.020				.0583	.0858	-.0105	-.0953
.025			.0476				
.040		-.0091					
.045			-.0449				
.050	-.3275			-.14[illegible]	-.1766	-.1928	-.3137
.080				-.2856			
.085			-.1667				
.086		.0471					
.094	-.2883						
.150				-.4276	-.4849	-.4718	-.4962
.163		.0000					
.177			-.2692				
.193		-.0535					
.229	-.0214						
.250				-.4862	-.5883	-.5325	-.6333
.274			-.3353				
.339		-.2698					
.362	.0156						
.400				-.5224	-.6673		-.7786
.402			-.4477				
.497	.0000						
.550				-.2408	-.6445		
.565			.0000				
.600							-.7369
.650						-.7216	
.700	-.0822				-.2301		
.725				-.1867			
.750						-.5414	-.5676
.760			-.2281				
.775				-.1557	-.1708		
.808			-.1335				
.834	-.1330						
.850				-.1533	-.1038	-.0396	
.85[illegible]			-.1655				
.865	-.1053						
.900	-.1662			-.1438			-.3620
.905			-.1598		-.0030		
.950				-.1063		.0249	
.955			-.1466				
.965	-.1714						

ARC11-716 TA14 01+T12+S12N25+AT10 UPPER WING (RB1U32)

ALPHAO(B) = 4.020 BETAO (B) = 4.070

SECTION (1)UPPER WING DEPENDENT VARIABLE CP

Y/BW	.2990	.3640	.4270	.5340	.6730	.7800	.8870
X/CW							
.000	-.4059	-.1693	.1275	.5229	.5095	.4710	.4746
.020				.0733	.0763	-.0221	-.0951
.025			-.0076				
.040		-.0559					
.045			-.0436				
.050	-.3526			-.1112	-.1759	-.1968	-.3086
.080				-.2426			
.085			-.1136				
.086		-.0103					
.094	-.2567						
.150				-.3730	-.4637	-.4560	-.4789
.163		.0000					
.177			-.1924				
.193		-.0492					
.229	.0017						
.250				-.4101	-.5404	-.6086	-.6171
.274			-.2691				
.339		-.1948					
.362	.0022						
.400				-.4831	-.6184		-.7585
.402			-.3866				
.497	.0000						
.550				-.1976	-.5207		
.565			.0000				
.600							-.7149
.650						-.6301	
.700	-.0621				-.2254		
.725				-.1904			
.750						-.1844	-.5266
.760			-.2272				
.775				-.1700	-.1863		
.808			-.1632				
.834	-.1720						
.850				-.1775	-.1173	-.0362	
.857			-.1857				
.865	-.1390						
.900	-.1917			-.1721			-.2565
.905			-.1803		-.0328		
.950				-.1339		.0358	
.953			-.1741				
.965	-.1878						

ARC11-716 IA14 01+T12+S12N25+AT10 UPPER WING (RB1U32)

ALPHAD(8) = 4.010 BETAD (9) = 6.080

SECTION (1)UPPER WING DEPENDENT VARIABLE CP

X/CW \ Y/BW	.2990	.3640	.4270	.5340	.6730	.7800	.8870
.000	-.5344	-.1076	.0811	.3922	.4903	.4418	.4491
.020				.0307	.0899	-.0108	-.0903
.025			-.0074				
.040		-.0444					
.045			-.0347				
.050	-.3830			-.1159	-.1532	-.1832	-.2927
.080				-.2270			
.085			-.0848				
.086		-.0266					
.094	-.2444						
.150				-.3336	-.4377	-.4326	-.4543
.163		.0000					
.177			-.1679				
.193		-.0390					
.229	.0091						
.250				-.4242	-.4987	-.5649	-.6011
.274			-.2382				
.339		-.1962					
.362	.0183						
.400				-.4205	-.5892		-.7370
.402			-.3031				
.497	.0000						
.550				-.1872	-.2717		
.565			.0000				
.600							-.6896
.650						-.3238	
.700	-.0467				-.2232		
.725				-.2122			
.750						-.1946	-.3903
.760			-.2315				
.775				-.2120	-.2115		
.808			-.1917				
.834	-.1945						
.850				-.2221	-.1565	-.0530	
.857			-.2022				
.865	-.1521						
.900	-.1956			-.2030			-.0673
.905			-.1836		-.0602		
.950				-.1709		.0262	
.953			-.1681				
.964	-.1767						

ARC11-716 IA14 D1+T12+S12N25+AT10 UPPER WING (RB1U32)

ALPHAD(8) = 4.060 BETAD (10) = 8.110

SECTION (1)UPPER WING DEPENDENT VARIABLE CP

Y/BW	.2990	.3640	.4270	.5340	.6730	.7800	.8870
X/CW							
.000	-.6366	-.0580	.0352	.1801	.4502	.4337	.4247
.020				-.0738	.0794	-.0081	-.0940
.025			-.0083				
.040		-.0290					
.045			-.0345				
.050	-.4585			-.1539	-.1507	-.1710	-.2841
.080				-.2028			
.085			-.0738				
.086		-.0120					
.094	-.3085						
.150				-.2620	-.3828	-.4102	-.4408
.163		.0000					
.177			-.1577				
.193		-.0488					
.229	.0406						
.250				-.3219	-.4446	-.5304	-.5827
.274			-.2014				
.339		-.1926					
.362	.0188						
.400				-.2165	-.4200		-.7099
.402			-.1900				
.497	.0000						
.550				-.1651	-.2644		
.565			.0000				
.600							-.5535
.650						-.3543	
.700	-.0254				-.2356		
.725				-.2281			
.750						-.2575	-.2259
.760			-.2311				
.775				-.2224	-.2483		
.808			-.2030				
.834	-.1992						
.850				-.2222	-.2044	-.1192	
.857			-.1996				
.865	-.1638						
.900	-.2098			-.1997			-.0547
.905			-.1816		-.1080		
.950				-.1687		-.0212	
.953			-.1645				
.965	-.1827						

ARC11-716 IA14 DI+T12+S12N25+AT10 UPPER WING (RB1032)

A PHAD(8) = 4.050 BETAD (11) = 10.160

SECTION (1)UPPER WING DEPENDENT VARIABLE CP

X/CW \ Y/BW	.2990	.3640	.4270	.5340	.6730	.7800	.8870
.000	-.5982	-.0826	.0024	.0867	.2564	.3841	.4012
.020				-.0771	-.0483	-.0295	-.0850
.025			-.0112				
.040		-.0531					
.045			-.0318				
.050	-.4410			-.1255	-.1947	-.1821	-.2788
.080				-.1664			
.085			-.0647				
.086		-.0453					
.094	-.3754						
.150				-.2106	-.3462	-.3959	-.4283
.163		.0000					
.177			-.1623				
.193		-.0141					
.229	.0032						
.250				-.2619	-.3966	-.4952	-.5720
.274			-.2141				
.339		-.1419					
.362	.0374						
.400				-.1897	-.2828		-.6769
.402			-.2138				
.497	.0000						
.550				-.1825	-.2623		
.565			.0000				
.600							-.3998
.650						-.3620	
.700	-.0391				-.2495		
.725				-.2505			
.750						-.2731	-.2291
.760			-.2392				
.775				-.2712	-.2498		
.808			-.2182				
.834	-.2229						
.850				-.2523	-.2053	-.1199	
.857			-.2423				
.865	-.2024						
.900	-.2597			-.2174			-.0382
.905			-.2058		-.1331		
.950				-.1802		-.0462	
.953			-.1690				
.965	-.2060						

ARC11-716 IA14 O1+T12+S12N25+AT10 UPPER WING (RB1U32)

ALPHAO(9) = 5.990 BETAO (1) = -9.980

SECTION (1)UPPER WING DEPENDENT VARIABLE CP

Y/BW	.2690	.3640	.4270	.5340	.6730	.7800	.8870
X/CW							
.000	.0808	.0219	.5376	.1951	.7554	.6816	.6342
.020				.0044	.0384	-.1151	-.1967
.025			.0779				
.040		.0969					
.045			-.0803				
.050	-.0416			-.2257	-.2814	-.3051	-.4363
.080				-.4065			
.085			-.2754				
.086		.1033					
.094	-.0844						
.150				-.6499	-.6266	-.6145	-.6073
.163		.0000					
.177			-.4652				
.193		-.1368					
.229	-.0549						
.250				-.7637	-.7699	-.7165	-.6896
.274			-.5372				
.339		-.3983					
.362	.0283						
.400				-.8044	-.8232		-.6584
.402			-.6333				
.497	.0000						
.550				-.6829	-.7128		
.565			.0000				
.600							-.6155
.650						-.6205	
.700	-.4819				-.2591		
.725				-.4650			
.750						-.5518	-.5639
.760			-.2551				
.775				-.4246	-.6048		
.800			-.0359				
.834	.0155						
.850				-.2524	-.5726	-.4908	
.857			.0196				
.865	.1420						
.900	.0419			-.1065			-.5497
.905			.0708		-.5059		
.950				-.0239		-.4526	
.953			.0803				
.965	.0635						

ARC11-716 IA14 D1+T12+S12N25+AT10 UPPER WING (RB1U32)

ALPHAO(9) = 5.960 BETAO (2) = -7.980

SECTION (1)UPPER WING DEPENDENT VARIABLE CP

Y/BW	.2990	.3640	.4270	.5340	.6730	.7800	.8870
X/CW							
.000	.0333	-.0612	.4868	.7494	.7149	.6425	.5950
.020				-.0233	.0105	-.1410	-.2240
.025			.0381				
.040		.0100					
.045			-.1022				
.050	-.0775			-.2517	-.3029	-.3269	-.4577
.080				-.4173			
.085			-.2875				
.086		.0359					
.094	-.1182						
.150				-.6561	-.6353	-.6249	-.6212
.163		.0000					
.177			-.4702				
.193		-.1503					
.229	-.1001						
.250				-.7612	-.7733	-.7672	-.7321
.274			-.5440				
.339		-.4230					
.362	.0185						
.400				-.8139	-.8314		-.7620
.402			-.6371				
.497	.0000						
.550				-.7291	-.7720		
.565			.0000				
.600							-.7166
.650						-.6786	
.700	-.4645				-.2571		
.725				-.2415			
.750						-.5820	-.6331
.760			-.2679				
.775				-.1440	-.8166		
.808			-.0790				
.834	-.0203						
.850				-.0958	-.5602	-.4955	
.857			-.0300				
.865	.0593						
.900	-.0151			-.0662			-.6150
.905			.0141		-.4669		
.950				-.0652		-.4508	
.953			.0246				
.965	-.0213						

ARC11-716 IA14 Q1+T12+S12N23+AT10 UPPER WING (RB1U32)

ALPHAD(9) = 5.940 BETAD (3) = -5.960

SECTION (1)UPPER WING DEPENDENT VARIABLE CP

Y/BW	.2990	.3640	.4270	.5340	.6730	.7800	.8670
X/CW							
.000	-.0101	-.1369	.4478	.6990	.6843	.6120	.5607
.020				-.0361	-.0024	-.1498	-.2437
.025			.0312				
.040		-.0664					
.045			-.1059				
.050	-.1205			-.2480	-.3070	-.3344	-.4722
.080				-.4152			
.085			-.2844				
.086		-.0079					
.094	-.1586						
.150				-.6407	-.6306	-.6257	-.6290
.163		.0000					
.177			-.4543				
.193		-.1537					
.229	-.1431						
.250				-.7581	-.7645	-.7610	-.7368
.274			-.4719				
.339		-.3624					
.362	.0108						
.400				-.7825	-.8319		-.8022
.402			-.5664				
.497	.0000						
.550				-.7165	-.8176		
.565			.0000				
.600							-.7593
.650						-.7176	
.700	-.4590				-.2559		
.725				-.2550			
.750						-.5953	-.6479
.760			-.2800				
.775				-.2148	-.6099		
.808			-.0893				
.834	-.0460						
.850				-.1630	-.5217	-.5161	
.857			-.0504				
.865	-.0002						
.900	-.0579			-.1319			-.6298
.905			-.0130		-.3469		
.950				-.1188		-.4735	
.953			-.0172				
.965	-.0791						

ARC11-716 IA14 OI+T12+S12N25+AT10 UPPER WING (RB1U32)

ALPHAO(9) = 5.960 BETAO (4) = -3.990

SECTION (1)UPPER WING DEPENDENT VARIABLE CP

Y/BW	.2990	.3640	.4270	.5340	.6730	.7800	.8870
X/CW							
.000	-.0709	-.2208	.4216	.6722	.6515	.5828	.5318
.020				-.0185	.0044	-.1442	-.2489
.025			.0368				
.040		-.1049					
.045			-.0967				
.050	-.1720			-.2253	-.2907	-.3235	-.4704
.080				-.3891			
.085			-.2655				
.086		-.0256					
.094	-.2056						
.150				-.6095	-.6091	-.6104	-.6264
.163		.0000					
.177			-.3723				
.193		-.1199					
.229	-.1334						
.250				-.6897	-.7421	-.7471	-.7333
.274			-.4597				
.339		-.3499					
.362	.0294						
.400				-.7387	-.8440		-.8242
.402			-.5721				
.497	.0000						
.550				-.7242	-.8123		
.565			.0000				
.600							-.7733
.650						-.7463	
.700	-.4414				-.2500		
.725				-.2828			
.750						-.6008	-.6548
.760			-.2681				
.775				-.2357	-.5676		
.808			-.0750				
.834	-.0703						
.850				-.1761	-.4144	-.5218	
.857			-.0690				
.865	-.0374						
.900	-.0923			-.1339			-.6362
.905			-.0524		-.1409		
.950				-.0991		-.4825	
.953			-.0517				
.965	-.1061						

ARC11-716 IA14 O1+T12+S12N25+ATID UPPER WING (RB1U32)

ALPHAO(9) = 5.970 BETAO (5) = -1.970

SECTION (1)UPPER WING DEPENDENT VARIABLE CP

Y/BW	.2990	.3640	.4270	.5340	.6730	.7800	.8870
X/CW							
.000	-.1414	-.3031	.3856	.6497	.6158	.5490	.5039
.020				-.0012	.0098	-.1479	-.2522
.025			.0493				
.040		-.1087					
.045			-.0840				
.050	-.2223			-.2147	-.2843	-.3231	-.4736
.080				-.3723			
.085			-.2421				
.086		.0271					
.094	-.2412						
.150				-.5809	-.6023	-.6036	-.6233
.163		.0000					
.177			-.3508				
.193		-.0981					
.229	-.1319						
.250				-.6609	-.7312	-.7385	-.7327
.274			-.4401				
.339		-.3371					
.362	.0345						
.400				-.7073	-.8305		-.8155
.402			-.5630				
.497	.0000						
.550				-.6942	-.8001		
.565			.0000				
.600							-.7746
.650						-.7448	
.700	-.4060				-.2495		
.725				-.2607			
.750						-.5913	-.6280
.760			-.2414				
.775				-.2030	-.4831		
.808			-.0669				
.834	-.0834						
.850				-.1547	-.2043	-.5321	
.857			-.0858				
.865	-.0509						
.900	-.1151			-.1139			-.6037
.905			-.0727		-.0282		
.950				-.0907		-.4946	
.953			-.0745				
.965	-.1218						

ARC11-716 IA14 D1+T12+S12N25+AT10 UPPER WING (RB1U32)

ALPHAD(9) = 5.980 BETAD (6) = .030

SECTION (1)UPPER WING DEPENDENT VARIABLE CP

X/CW \ Y/BW	.2990	.3640	.4270	.5040	.6730	.7800	.8870
.000	-.2039	-.3497	.3321	.6058	.5816	.5241	.4862
.020				-.0087	.0085	-.1377	-.2377
.025			.0270				
.040		-.0529					
.045			-.0877				
.050	-.2689			-.2103	-.2728	-.3109	-.4552
.080				-.3642			
.085			-.2324				
.086		.0470					
.094	-.2667						
.150				-.5541	-.5867	-.5872	-.6037
.163		.0000					
.177			-.3322				
.193		-.0896					
.229	-.0777						
.250				-.6297	-.7123	-.7195	-.7165
.274			-.4188				
.339		-.3260					
.362	.0289						
.400				-.6755	-.7910		-.8361
.402			-.5392				
.497	.0000						
.550				-.5767	-.7728		
.565			.0000				
.600							-.7870
.650						-.7885	
.700	-.3267				-.2409		
.725				-.2588			
.750						-.6073	-.6244
.760			-.2301				
.775				-.2154	-.2378		
.808			-.0970				
.834	-.0904						
.850				-.1671	-.1109	-.5238	
.857			-.1276				
.865	-.0762						
.900	-.1522			-.1344			-.5805
.935			-.1194		-.0315		
.950				-.1061		-.4463	
.953			-.1201				
.965	-.1620						

ARC11-716 IA14 01+T12+S12N25+AT10 UPPER WING (RB1U32)

ALPHAO(9) = 5.970 BETAO (7) = 2.030

SECTION (1)UPPER WING DEPENDENT VARIABLE CP

Y/SW	.2990	.3640	.4270	.5340	.6730	.7800	.8870
X/CW							
.000	-.3096	-.3488	.2361	.5615	.5511	.4990	.4624
.020				-.0288	.0100	-.1331	-.2456
.025			-.0172				
.040		-.0014					
.045			-.1097				
.050	-.3222			-.2215	-.2682	-.3018	-.4558
.080				-.3643			
.085			-.2275				
.086		.0132					
.094	-.3099						
.150				-.5188	-.5716	-.5742	-.6049
.163		.0000					
.177			-.3174				
.193		-.0795					
.229	-.0284						
.250				-.5601	-.6881	-.7103	-.7173
.274			-.3871				
.339		-.2982					
.362	.0042						
.400				-.5800	-.7486		-.8413
.402			-.4765				
.497	.0000						
.550				-.3362	-.7190		
.565			.0000				
.600							-.7896
.650						-.8085	
.700	-.1507				-.2340		
.725				-.2350			
.750						-.6142	-.6132
.760			-.2246				
.775				-.1882	-.1969		
.808			-.1484				
.834	-.1333						
.850				-.1579	-.1252	-.4145	
.857			-.1772				
.865	-.1189						
.900	-.1851			-.1485			-.5447
.905			-.1725		-.0156		
.950				-.1144		-.0835	
.955			-.1707				
.965	-.1936						

ASC11-716 IA14 DI+T12+S12N25+AT10 UPPER WING (RD1U32)

ALPHAD(9) = 5.950 BETAD (8) = 4.080

SECTION (1)UPPER WING DEPENDENT VARIABLE CP

Y/SW	.2990	.3640	.4270	.5340	.6730	.7800	.8870
X/CW							
.000	-.4381	-.1891	.0941	.4897	.5189	.4673	.4453
.020				-.0292	-.0068	-.1378	-.2362
.025			-.0648				
.040		-.0856					
.045			-.1146				
.050	-.3674			-.2018	-.2711	-.3035	-.4393
.080				-.3329			
.085			-.1792				
.086		-.0403					
.094	-.3160						
.150				-.4640	-.5569	-.5641	-.5899
.163		.0000					
.177			-.2484				
.193		-.0771					
.229	-.0051						
.250				-.5198	-.6517	-.6934	-.7086
.274			-.3171				
.339		-.2523					
.362	.0013						
.400				-.5667	-.6898		-.8235
.402			-.4271				
.497	.0000						
.550				-.2967	-.6520		
.555			.0000				
.600							-.7768
.650						-.7830	
.700	-.1009				-.2317		
.725				-.2448			
.750						-.4670	-.5775
.760			-.2275				
.775				-.2193	-.2102		
.808			-.1895				
.834	-.1896						
.850				-.2097	-.1405	-.0440	
.857			-.2129				
.865	-.1588						
.900	-.2128			-.2068			-.4489
.905			-.2036		-.0367		
.930				-.1682		.0470	
.953			-.1891				
.955	-.2095						

ARC11-716 IA14 O1+T12+S12N25+AT10 UPPER WING (R91032)

ALPHA0(9) = 5.940 BETA0 (9) = 6.100

SECTION (1)UPPER WING DEPENDENT VARIABLE CP

Y/BW	.2990	.3640	.4270	.5340	.6730	.7800	.8870
X/CW							
.000	-.5853	-.1092	.0230	.2967	.4863	.4369	.4239
.020				-.1029	-.0111	-.1345	-.2290
.025			-.0599				
.040		-.0622					
.045			-.0920				
.050	-.4335			-.2200	-.2678	-.2961	-.4305
.080				-.3202			
.085			-.1339				
.086		-.0379					
.094	-.3160						
.150				-.4077	-.5362	-.5385	-.5719
.163		.0000					
.177			-.2149				
.193		-.1080					
.229	.0145						
.250				-.4795	-.5888	-.6660	-.6913
.274			-.2813				
.339		-.2564					
.362	.0068						
.400				-.4595	-.6534		-.8068
.402			-.3403				
.497	.0000						
.550				-.2296	-.3536		
.565			.0000				
.600							-.7499
.650						-.5305	
.700	-.0755				-.2336		
.725				-.2536			
.750						-.2092	-.5517
.760			-.2361				
.775				-.2411	-.2232		
.808			-.2219				
.834	-.2127						
.850				-.2398	-.1589	-.0670	
.857			-.2331				
.865	-.1731						
.900	-.2189			-.2136			-.3770
.905			-.2121		-.0593		
.950				-.1825		.0213	
.953			-.1912				
.965	-.1971						

ARC11-716 IA14 D1+T12+S12N25+AT10 UPPER WING (RB1U32)

ALPHAD(9) = 5.920 BETAD (10) = 8.130

SECTION (1)UPPER WING DEPENDENT VARIABLE CP

Y/BW	.2990	.3640	.4270	.5340	.6730	.7800	.8870
X/CW							
.000	-.6572	-.0897	-.0171	.0874	.4114	.4233	.3936
.020				-.1900	-.0415	-.1267	-.2374
.025			-.0504				
.040		-.0450					
.045			-.0768				
.050	-.5161			-.2397	-.2688	-.2909	-.4264
.080				-.2948			
.085			-.1182				
.086		-.0377					
.094	-.3926						
.150				-.3339	-.4876	-.5149	-.5600
.163		.0000					
.177			-.1995				
.193		-.1063					
.229	.0179						
.250				-.3543	-.5143	-.6297	-.6698
.274			-.2598				
.339		-.2219					
.362	.0099						
.400				-.2476	-.4827		-.7847
.402			-.2326				
.497	.0000						
.550				-.1979	-.3026		
.565			.0000				
.600							-.7011
.650						-.3691	
.700	-.0613				-.2423		
.725				-.2442			
.750						-.2689	-.4741
.760			-.2391				
.775				-.2504	-.2597		
.808			-.2316				
.834	-.2263						
.850				-.2383	-.2109	-.1169	
.857			-.2429				
.865	-.1939						
.900	-.2390			-.2124			-.0296
.905			-.2118		-.1111		
.950				-.1816		-.0222	
.953			-.1882				
.965	-.1996						

ARC11-716 IA14 D1+T12+S12N25+AT10 UPPER WING (RB1U32)

ALPHAD(9) = 5.980 BETAD (11) = 10.150

SECTION (1)UPPER WING DEPENDENT VARIABLE CP

Y/BW	.2990	.3640	.4270	.5340	.6730	.7800	.8870
X/CW							
.000	-.6256	-.1090	-.0661	-.0376	.2273	.3816	.3827
.020				-.2056	-.1604	-.1485	-.2231
.025			-.0795				
.040		-.0833					
.045			-.0960				
.050	-.4860			-.2107	-.3235	-.2923	-.4075
.080				-.2262			
.085			-.1175				
.086		-.0707					
.094	-.4723						
.150				-.2304	-.4247	-.4899	-.5397
.163		.0000					
.177			-.2021				
.193		-.1048					
.229	-.0316						
.250				-.2958	-.4333	-.5742	-.6409
.274			-.2543				
.339		-.1686					
.362	.0097						
.400				-.2382	-.3264		-.7404
.402			-.2266				
.497	.0000						
.550				-.2345	-.2862		
.565			.0000				
.600							-.5728
.650						-.3743	
.700	-.0541				-.2499		
.725				-.3030			
.750						-.2708	-.2332
.760			-.2333				
.775				-.3350	-.2536		
.800			-.2349				
.834	-.2359						
.850				-.2958	-.2012	-.1138	
.857			-.2383				
.865	-.2150						
.900	-.2690			-.2616			-.0426
.905			-.2021		-.1430		
.950				-.2267		-.0478	
.953			-.1701				
.965	-.1979						

ARC11-716 IA14 D1+T12+S12N25+AT10 UPPER WING (RB1U32)

ALPHAD(10) = 8.080 BETAD (1) = -9.950

SECTION (1)UPPER WING DEPENDENT VARIABLE CP

Y/BW	.2990	.3640	.4270	.5340	.6730	.7800	.8870
X/CW							
.000	.1005	.0235	.5589	.8073	.7318	.6348	.5801
.020				-.0741	.0618	-.2241	-.3230
.025			.0115				
.040		.0774					
.045			-.1499				
.050	-.0407			-.3002	-.3588	-.4294	-.5412
.080				-.4750			
.085			-.3429				
.086		.0635					
.094	-.0492						
.150				-.7184	-.6974	-.6924	-.6553
.163		.0000					
.177			-.5475				
.193		-.2013					
.229	-.0146						
.250				-.8319	-.8101	-.6559	-.6224
.274			-.6070				
.339		-.4635					
.362	.0104						
.400				-.8027	-.7359		-.6303
.402			-.6900				
.497	.0000						
.550				-.7171	-.6831		
.565			.0000				
.600							-.5825
.650						-.5932	
.700	-.5546				-.2718		
.725				-.5723			
.750						-.5534	-.5552
.760			-.2689				
.775				-.5587	-.6242		
.808			-.0956				
.834	.0263						
.850				-.4861	-.6003	-.5249	
.857			-.0489				
.865	.0883						
.900	.0867			-.4137			-.5420
.935			-.0200		-.5756		
.950				-.3322		-.4907	
.953			-.0089				
.965	-.0360						

ARC11-716 IA14 D1+T12+S12N25+AT10 UPPER WING (RB1U32)

ALPHAO(10) = 8.110 BETAO (2) = -7.950

SECTION (1)UPPER WING DEPENDENT VARIABLE CP

Y/BW	.2990	.3640	.4270	.5340	.6730	.7800	.8870
X/CW							
.000	.0536	-.0715	.4876	.7675	.7004	.6000	.5431
.020				-.1071	.0210	-.2535	-.3555
.025			-.0340				
.040		-.0124					
.045			-.1803				
.050	-.0828			-.3238	-.3820	-.4490	-.5593
.080				-.4886			
.085			-.3692				
.086		-.0042					
.094	-.0925						
.150				-.7257	-.7110	-.7010	-.6777
.163		.0000					
.177			-.5507				
.193		-.2219					
.229	-.0851						
.250				-.8332	-.8285	-.6797	-.6451
.274			-.5956				
.339		-.4608					
.362	-.0080						
.400				-.8188	-.7694		-.6532
.402			-.6885				
.497	.0000						
.550				-.7283	-.7123		
.565			.0000				
.600							-.6045
.650						-.6197	
.700	-.5088				-.2681		
.725				-.5331			
.750						-.5624	-.5742
.760			-.2411				
.775				-.5071	-.6383		
.808			-.1012				
.834	.0066						
.850				-.3924	-.6135	-.5296	
.857			-.0719				
.865	.0715						
.900	.0674			-.2711			-.5557
.905			-.0425		-.5769		
.950				-.1720		-.4985	
.953			-.0169				
.965	-.0422						

ARC11-716 IA14 O1+T12+S12N25+AT10 UPPER WING (R81U32)

ALPHAO(10) = 8.130 BETAO (3) = -5.940

SECTION (1)UPPER WING DEPENDENT VARIABLE CP

X/CW \ Y/BW	.2990	.3640	.4270	.5340	.6730	.7800	.8870
.000	-.0103	-.1739	.4126	.7153	.6642	.5643	.5021
.020				-.1379	-.0205	-.2749	-.3868
.025			-.0704				
.040		-.1032					
.045			-.2043				
.050	-.1316			-.3429	-.3868	-.4703	-.5889
.060				-.4999			
.085			-.3765				
.086		-.0737					
.094	-.1472						
.150				-.7262	-.7181	-.7140	-.7188
.163		.0000					
.177			-.5363				
.193		-.2120					
.229	-.1431						
.250				-.8051	-.8189	-.6981	-.7094
.274			-.5777				
.339		-.4062					
.362	-.0126						
.400				-.7922	-.7790		-.7175
.402			-.6037				
.497	.0000						
.550				-.6879	-.7124		
.565			.0000				
.600							-.6429
.650						-.6246	
.700	-.5110				-.2637		
.725				-.4715			
.750						-.5605	-.6051
.760			-.2462				
.775				-.4052	-.6273		
.808			-.1399				
.834	-.0168						
.850				-.2646	-.6011	-.5051	
.857			-.1101				
.865	.0328						
.900	.0082			-.1723			-.5947
.935			-.0796		-.5 32		
.950				-.1193		-.4685	
.9[illegible]			-.0551				
.965	-.0849						

ARC11-716 IA14 O1+T12+S12N29+AT10 UPPER WING (RB1U32)

ALPHAO(10) = 7.980 BETAO (4) = -3.970

SECTION (1)UPPER WING DEPENDENT VARIABLE CP

Y/BW	.2990	.3640	.4270	.5340	.6730	.7800	.8870
X/CW							
.000	-.0626	-.2502	.3810	.6881	.6541	.5544	.4848
.020				-.1110	-.0172	-.2508	-.3747
.025			-.0561				
.040		-.1467					
.045			-.1762				
.050	-.1714			-.3064	-.3634	-.447	-.5698
.080				-.4631			
.085			-.3295				
.086		-.1015					
.094	-.1896						
.150				-.6718	-.6803	-.6894	-.7123
.163		.0000					
.177			-.4172				
.193		-.1715					
.229	-.1799						
.250				-.7666	-.8059	-.7526	-.7626
.274			-.4842				
.339		-.3600					
.362	.0207						
.400				-.7829	-.8170		-.7687
.402			-.6063				
.497	.0000						
.550				-.7205	-.7537		
.565			.0000				
.600							-.6700
.650						-.6663	
.700	-.5113				-.2608		
.725				-.3508			
.750						-.5866	-.6301
.760			-.2418				
.775				-.2997	-.6271		
.808			-.1197				
.834	-.0408						
.850				-.2228	-.5904	-.4985	
.857			-.0952				
.865	-.0015						
.900	.0006			-.1788			-.6298
.905			-.0692		-.4987		
.950				-.1469		-.4695	
.953			-.0695				
.965	-.1168						

ARC11-716 IA14 Q1+T12+S12N25+AT10 UPPER WING (RB1U32)

ALPHAO(10) = 8.010 BETAO (5) = -1.970

SECTION (11)UPPER WING DEPENDENT VARIABLE CP

Y/BW	.2990	.3640	.4270	.5340	.6730	.7800	.8870
X/CW							
.000	-.1442	-.3662	.3520	.6475	.6235	.5232	.4573
.020				-.0919	-.0073	-.2591	-.3897
.025			-.0357				
.040		-.2342					
.045			-.1552				
.050	-.2261			-.2864	-.3592	-.4468	-.5797
.080				-.4365			
.085			-.3009				
.086		-.0573					
.094	-.2343						
.150				-.6507	-.6731	-.6898	-.7182
.163		.0000					
.177			-.3983				
.193		-.1413					
.229	-.1820						
.250				-.6943	-.7980	-.7973	-.7694
.274			-.4750				
.339		-.3594					
.362	.0257						
.400				-.7396	-.8301		-.7785
.402			-.5889				
.497	.0000						
.550				-.6819	-.7626		
.565			.0000				
.600							-.6900
.650						-.6702	
.700	-.5132				-.2610		
.725				-.2972			
.750						-.5939	-.6388
.760			-.2286				
.775				-.2480	-.6103		
.808			-.1037				
.830	-.0694						
.850				-.1800	-.5480	-.4883	
.857			-.0929				
.855	-.0388						
.900	-.0412			-.1375			-.6261
.905			-.0770		-.3925		
.950				-.1118		-.4779	
.953			-.0827				
.965	-.1353						

ARC11-716 IA14 O1+T12+S12N25+AT10 UPPER WING (R01U32)

ALPHAO(10) = 7.930 BETAO (6) = .060

SECTION (1)UPPER WING DEPENDENT VARIABLE CP

Y/SW	.2990	.3640	.4270	.5340	.6730	.7800	.8870
X/CW							
.000	-.2141	-.5107	.2817	.3919	.5893	.5037	.4412
.020				-.0917	-.0116	-.2462	-.3719
.025			-.0516				
.040		-.1315					
.045			-.1619				
.050	-.2729			-.2805	-.3537	-.4342	-.5680
.080				-.4278			
.085			-.2997				
.086		-.0095					
.094	-.2731						
.150				-.6284	-.6624	-.6755	-.7047
.163		.0000					
.177			-.3836				
.193		-.1263					
.229	-.1109						
.250				-.6980	-.7831	-.7960	-.7957
.274			-.4620				
.339		-.3552					
.362	.0130						
.400				-.7307	-.8457		-.8213
.402			-.5482				
.497	.0000						
.550				-.3900	-.8185		
.565			.0000				
.600							-.7465
.650						-.7272	
.700	-.4548				-.2588		
.725				-.3037			
.750						-.6240	-.7065
.760			-.2442				
.775				-.2411	-.5522		
.808			-.1192				
.834	-.0957						
.850				-.2039	-.3157	-.5392	
.857			-.1412				
.865	-.0909						
.900	-.1057			-.1724			-.6720
.905			-.1405		-.1120		
.950				-.1336		-.5372	
.953			-.1399				
.965	-.1717						

ARC11-716 IA14 O1+T12+S12N25+AT10 UPPER WING (RB1U32)

ALPHAD(10) = 7.970 BETAD (7) = 2.050

SECTION (1)UPPER WING DEPENDENT VARIABLE CP

Y/SW	.2990	.3640	.4270	.5340	.6730	.7800	.8870
X/CW							
.000	-.3107	-.4063	.1623	.5369	.5505	.4818	.4209
.020				-.1199	.0777	-.2376	-.3742
.025			-.0953				
.040		-.1074					
.045			-.1778				
.050	-.3159			-.2881	-.3403	-.4234	-.5660
.080				-.4288			
.085			-.2825				
.086		-.0280					
.094	-.3045						
.150				-.6041	-.6418	-.6610	-.6995
.163		.0000					
.177			-.3648				
.193		-.1130					
.229	-.0325						
.250				-.6596	-.7579	-.7809	-.7912
.274			-.4240				
.339		-.3297					
.362	-.0134						
.400				-.6559	-.8298		-.8494
.402			-.5082				
.497	.0000						
.550				-.5059	-.8098		
.565			.0000				
.600							-.8076
.650						-.7801	
.700	-.2153				-.2388		
.725				-.2935			
.750						-.6149	-.7141
.760			-.2412				
.775				-.2177	-.2555		
.808			-.1734				
.834	-.1495						
.850				-.1916	-.1633	-.5666	
.857			-.1921				
.865	-.1406						
.900	-.1490			-.1816			-.6892
.905			-.1876		-.0874		
.950				-.1495		-.5059	
.953			-.1802				
.955	-.2056						

DATE 10 JAN 75 TABULATED PRESSURE DATA - IA14A - VOL. 6 (RB1U32)

ARC11-716 IA14 O1+T12+S12N25+AT10 UPPER WING

ALPHAO(10) = 7.950 BETAO (8) = 4.080

SECTION (1)UPPER WING DEPENDENT VARIABLE CP

Y/BW	.2990	.3640	.4270	.5340	.6730	.7800	.8870
X/CW							
.000	-.4516	-.2220	-.0228	.4105	.5152	.4448	.3924
.020				-.1837	-.0194	-.2504	-.3770
.025			-.1435				
.040		-.1253					
.045			-.1863				
.050	-.3727			-.3211	-.3518	-.4315	-.5660
.080				-.4369			
.085			-.2253				
.086		-.0858					
.094	-.3425						
.150				-.5637	-.6413	-.6572	-.6927
.163		.0000					
.177			-.2975				
.193		-.1264					
.229	-.0224						
.250				-.5826	-.7455	-.7723	-.7850
.274			-.3534				
.339		-.3031					
.362	-.0219						
.400				-.6201	-.7858		-.8389
.402			-.4585				
.497	.0000						
.550				-.3678	-.7067		
.565			.0000				
.600							-.8114
.650						-.7821	
.700	-.1377				-.2430		
.725				-.2855			
.750						-.6268	-.6625
.760			-.2617				
.775				-.2409	-.2422		
.808			-.2294				
.834	-.2116						
.850				-.2354	-.1793	-.4543	
.857			-.2432				
.865	-.1904						
.900	-.1912			-.2224			-.6161
.905			-.2287		-.0778		
.950				-.1865		-.1102	
.955			-.2034				
.965	-.2190						

DATE 10 JAN 75 TABULATED PRESSURE DATA - IA14A - VOL. 6

ARC11-716 IA14 O1+T12+S12N25+AT10 UPPER WING (RB1U32)

ALPHAO(10) = 7.920 BETAO (9) = 6.110

SECTION (1)UPPER WING DEPENDENT VARIABLE CP

Y/BW	.2990	.3640	.4270	.5340	.6730	.7800	.8870
X/CW							
.000	-.5862	-.1626	-.0600	.1767	.4691	.4124	.3717
.020				-.2726	-.0496	-.2519	-.3770
.025			-.1156				
.040		-.1241					
.045			-.1412				
.050	-.4511			-.3442	-.3618	-.4279	-.5595
.080				-.4155			
.085			-.1763				
.086		-.0944					
.094	-.3670						
.150				-.4632	-.6266	-.6459	-.6791
.163		.0000					
.177			-.2597				
.193		-.1582					
.229	-.0330						
.250				-.5292	-.7073	-.7558	- .731
.274			-.3189				
.339		-.3073					
.362	-.0172						
.400				-.4694	-.7191		-.8331
.402			-.3658				
.497	.0000						
.550				-.2847	-.4411		
.565			.0000				
.600							-.7958
.650						-.7993	
.700	-.1076				-.2446		
.725				-.2810			
.750						-.2391	-.5767
.760			-.2697				
.775				-.2628	-.2508		
.808			-.2518				
.834	-.2299						
.850				-.2504	-.1629	-.0562	
.857			-.2483				
.865	-.1939						
.900	-.2010			-.2229			-.5283
.905			-.2198		-.0571		
.950				-.1915		.0076	
.953			-.1876				
.965	.1987						

ARC11-716 IA14 O1+T12+S12N25+AT10 UPPER WING (RB1U32)

ALPHAO(10) = 7.910 BETAO (10) = 8.160

SECTION (1)UPPER WING DEPENDENT VARIABLE CP

Y/BW	.2990	.3640	.4270	.5340	.6730	.7800	.8870
X/CW							
.000	-.6655	-.1151	-.0881	-.0073	.3975	.3886	.3561
.020				-.3151	-.0784	-.2504	-.3718
.025			-.0992				
.040		-.0808					
.045			-.1223				
.050	-.5598			-.3324	-.3610	-.4203	-.5549
.080				-.3694			
.085			-.1569				
.086		-.0720					
.094	-.4720						
.150				-.3875	-.5852	-.6222	-.6697
.163		.0000					
.177			-.2369				
.193		-.1690					
.229	-.0347						
.250				-.4414	-.6057	-.7270	-.7608
.274			-.2890				
.339		-.2717					
.362	-.0066						
.400				-.3275	-.5241		-.8554
.402			-.2641				
.497	.0000						
.550				-.2779	-.3438		
.565			.0000				
.600							-.7742
.650						-.3980	
.700	-.0853				-.2488		
.725				-.3159			
.750						-.2696	-.6765
.760			-.2844				
.775				-.3192	-.2812		
.808			-.2649				
.834	-.2420						
.850				-.2949	-.2047	-.1092	
.857			-.2590				
.865	-.2123						
.900	-.2213			-.2673			-.3757
.905			-.2274		-.1040		
.950				-.2420		-.0124	
.953			-.1945				
.965	-.2072						

ARC11-716 IA14 O1+T12+S12N25+AT10 UPPER WING (RB1U32)

ALPHAD(10) = 8.060 BETAD (11) = 10.180

SECTION (1)UPPER WING DEPENDENT VARIABLE CP

Y/BW	.2990	.3640	.4270	.5340	.6730	.7800	.8870
X/CW							
.000	-.6082	-.1517	-.1353	-.1118	.3060	.3960	.3321
.020				-.3417	-.1338	-.2371	-.3699
.025			-.1224				
.040		-.1151					
.045			-.1450				
.050	-.4908			-.2794	-.4132	-.4085	-.5382
.080				-.2794			
.085			-.1773				
.086		-.1039					
.094	-.4939						
.150				-.2692	-.5451	-.6073	-.6500
.163		.0000					
.177			-.2382				
.193		-.1782					
.229	-.1102						
.250				-.2409	-.5071	-.6999	-.7427
.274			-.2815				
.339		-.2005					
.362	-.0205						
.400				-.1956	-.3851		-.8186
.402			-.2687				
.497	.0000						
.550				-.1964	-.3195		
.565			.0000				
.600							-.7407
.690						-.4031	
.700	-.0864				-.2599		
.725				-.2614			
.750						-.2861	-.4569
.760			-.2910				
.775				-.2799	-.2789		
.808			-.2669				
.834	-.2545						
.850				-.2446	-.2117	-.1234	
.857			-.2514				
.865	-.2392						
.900	-.2420			-.2171			-.0149
.905			-.2058		-.1476		
.950				-.1924		-.0562	
.953			-.1826				
.965	-.2054						

ARC11-716 IA14 O1+T12+S12N25+AT10 UPPER WING (RB1U32)

ALPHAO(11) = 10.040 BETAO (1) = -9.930

SECTION (1)UPPER WING DEPENDENT VARIABLE CP

Y/BW	.2990	.3640	.4270	.5340	.6730	.7800	.8870
X/CW							
.000	.1294	.0629	.6045	.8345	.7187	.5922	.5211
.020				-.1019	-.1085	-.3233	-.4322
.025			.0087				
.040		.0857					
.045			-.1705				
.050	-.0196			-.3367	-.4316	-.5187	-.6300
.080				-.5136			
.085			-.3843				
.086		.0644					
.094	-.0393						
.150				-.7542	-.7537	-.7501	-.7154
.163		.0000					
.177			-.5982				
.193		-.2227					
.229	.0048						
.250				-.8582	-.7573	-.6986	-.7088
.274			-.6695				
.339		-.4926					
.362	.0056						
.400				-.8426	-.7370		-.7068
.402			-.6965				
.497	.0000						
.550				-.7854	-.7089		
.565			.0000				
.600							-.6513
.650						-.6274	
.700	-.5633				-.2850		
.725				-.6932			
.750						-.5779	-.6144
.760			-.4019				
.775				-.6566	-.6417		
.808			-.2523				
.834	-.0205						
.850				-.5947	-.6115	-.5409	
.857			-.1782				
.865	.0031						
.900	-.0302			-.5477			-.6094
.905			-.1191		-.6048		
.950				-.4690		-.5108	
.953			-.1072				
.965	-.1433						

ARC11-716 IA14 O1+T12+S12N25+AT10 UPPER WING (RB1U32)

ALPHAO(11) = 9.930 BETAO (2) = -7.950

SECTION (1)UPPER WING DEPENDENT VARIABLE CP

Y/BW	.2990	.3640	.4270	.5340	.6730	.7800	.8870
X/CW							
.000	.0730	-.0524	.5231	.7969	.6950	.5588	.4842
.020				-.1368	-.1183	-.3434	-.4558
.025			-.0541				
.040		-.0107					
.045			-.2176				
.050	-.0756			-.3604	-.4430	-.5322	-.6454
.080				-.5299			
.085			-.4113				
.086		-.0079					
.094	-.0860						
.150				-.7588	-.7584	-.7580	-.7573
.163		.0000					
.177			-.6135				
.193		-.2469					
.229	-.0692						
.250				-.8224	-.7572	-.7160	-.7486
.274			-.6626				
.339		-.4932					
.362	-.0203						
.400				-.8280	-.7584		-.7303
.402			-.7000				
.497	.0000						
.550				-.7527	-.7102		
.565			.0000				
.600							-.6570
.650						-.6256	
.700	-.5278				-.2741		
.725				-.6408			
.750						-.5612	-.6222
.760			-.3388				
.775				-.6153	-.6325		
.808			-.2015				
.834	-.0175						
.850				-.5207	-.6016	-.5248	
.857			-.1730				
.865	.0045						
.900	-.0264			-.4502			-.6134
.905			-.1254		-.5927		
.950				-.3424		-.5002	
.953			-.1070				
.965	-.1524						

ARC11-716 IA14 O1+T12+S12N25+AT10 UPPER WING (RB1U32)

ALPHAO(11) = 9.960 BETAO (3) = -5.920

SECTION (1)UPPER WING DEPENDENT VARIABLE CP

Y/BW	.2990	.3640	.4270	.5340	.6730	.7800	.8870
X/CW							
.000	.0098	-.1681	.4231	.7485	.6618	.5267	.4420
.020				-.1816	-.1468	-.3674	-.4904
.025			-.1170				
.040		-.1063					
.045			-.2671				
.050	-.1312			-.3943	-.4597	-.5531	-.6697
.080				-.5540			
.085			-.4365				
.086		-.0838					
.094	-.1415						
.150				-.7733	-.7648	-.7730	-.8010
.163		.0000					
.177			-.6174				
.193		-.2777					
.229	-.1387						
.250				-.8378	-.7796	-.7872	-.8167
.274			-.6258				
.339		-.4107					
.362	-.0517						
.400				-.8650	-.7982		-.6932
.402			-.5995				
.497	.0000						
.550				-.7903	-.7423		
.565			.0000				
.600							-.6629
.650						-.6823	
.700	-.5297				-.2703		
.725				-.6334			
.750						-.6262	-.6363
.760			-.3257				
.775				-.6094	-.5450		
.808			-.2340				
.834	-.0374						
.850				-.4436	-.4975	-.6064	
.857			-.2181				
.861	-.0135						
.900	-.0379			-.3353			-.6386
.905			-.1692		-.5016		
.950				-.2413		-.5546	
.953			-.1195				
.965	-.1942						

ARC11-716 IA14 O1+T12+S12N25+AT10 UPPER WING (RB1U32)

ALPHAO(11) = 9.960 BETAO (4) = -3.970

SECTION (1) UPPER WING DEPENDENT VARIABLE CP

Y/BW	.2990	.3640	.4270	.5340	.6730	.7800	.8870
X/CW							
.000	-.0657	-.2606	.3373	.7093	.6415	.5090	.4210
.020				-.1884	-.1414	-.3611	-.4963
.025			-.1716				
.040		-.1920					
.045			-.2964				
.050	-.1817			-.3843	-.4441	-.5436	-.6715
.080				-.5312			
.085			-.3865				
.086		-.1474					
.094	-.1884						
.150				-.7358	-.7478	-.7638	-.7991
.183		.0000					
.177			-.4767				
.193		-.1803					
.229	-.1792						
.250				-.8268	-.7706	-.7747	-.8104
.274			-.5207				
.339		-.3802					
.362	.0106						
.400				-.8341	-.7890		-.6532
.402			-.6177				
.497	.0000						
.550				-.7514	-.7243		
.565			.0000				
.600							-.6374
.650						-.6312	
.700	-.5391				-.2653		
.725				-.5734			
.750						-.5968	-.6140
.750			-.2969				
.775				-.5264	-.5519		
.808			-.1889				
.834	-.0209						
.850				-.3551	-.5205	-.5798	
.857			-.1904				
.865	-.0157						
.872	-.0431			-.2470			-.6143
.875			-.1461		-.5269		
.880				-.1781		-.5390	
.883			-.1124				
.885	-.1798						

ARC11-716 IA14 O1+T12+S12N25+AT10 UPPER WING (RB1U32)

ALPHAD(11) = 9.950 BETAD (5) = -1.970

SECTION (1)UPPER WING DEPENDENT VARIABLE CP

Y/BW	.2990	.3640	.4270	.5340	.6730	.7800	.8870
X/CW							
.000	-.1596	-.4215	.2840	.6593	.6185	.4940	.4022
.020				-.1637	-.1366	-.3486	-.4951
.025			-.1115				
.040		-.3023					
.045			-.2217				
.050	-.2394			-.3560	-.4314	-.5313	-.6677
.080				-.5079			
.085			-.3596				
.066		-.2137					
.094	-.2361						
.150				-.7116	-.7317	-.7518	-.7930
.163		.0000					
.177			-.4420				
.193		-.1697					
.229	-.2186						
.250				-.7678	-.7968	-.7750	-.8143
.274			-.5122				
.339		-.1791					
.362	.0166						
.400				-.7747	-.7948		-.6667
.402			-.6110				
.497	.0000						
.550				-.6919	-.7192		
.585			.0000				
.600							-.6449
.650						-.6201	
.700	-.5457				-.2573		
.725				-.4479			
.750						-.5598	-.6174
.760			-.2660				
.775				-.3831	-.5666		
.808			-.1482				
.834	-.0462						
.850				-.2331	-.5605	-.5420	
.857			-.1745				
.865	-.0307						
.900	-.0520			-.1668			-.6206
.905			-.1525		-.5244		
.950				-.1272		-.5127	
.953			-.1158				
.965	-.1674						

ARC11-716 IA14 D1+T12+S12N25+AT10 UPPER WING (RB1U32)

ALPHAO(11) = 9.950 BETAO (6) = .030

SECTION (1)UPPER WING DEPENDENT VARIABLE CP

Y/BW	.2990	.3640	.4270	.5340	.6730	.7800	.8870
X/CW							
.000	-.2351	-.5973	.1805	.5938	.5901	.4753	.3838
.020				-.1775	-.1416	-.3454	-.4922
.025			-.1444				
.040		-.3687					
.045			-.2402				
.050	-.2781			-.3510	-.4277	-.5273	-.6638
.060				-.4955			
.085			-.3498				
.086		-.0597					
.094	-.2670						
.150				-.6900	-.7243	-.7475	-.7867
.163		.0000					
.177			-.4263				
.193		-.1493					
.229	-.1882						
.250				-.7576	-.8317	-.7964	-.7245
.274			-.4961				
.339		-.3689					
.362	-.0044						
.400				-.7421	-.8065		-.7396
.402			-.5895				
.497	.0000						
.550				-.6732	-.7498		
.565			.0000				
.600							-.6628
.650						-.6382	
.700	-.4989				-.2574		
.725				-.3415			
.750						-.5377	-.6305
.760			-.2417				
.775				-.2816	-.5029		
.808			-.1414				
.834	-.1003						
.850				-.2079	-.5563	-.4955	
.857			-.1570				
.865	-.0819						
.900	-.0927			-.1602			-.6315
.905			-.1635		-.4553		
.950				-.1278		-.4871	
.953			-.1511				
.965	-.1688						

A2C11-716 IA14 D1+T12+312N25+AT10 UPPER WING (RB1U32)

ALPHAO(11) = 9.950 BETAO (7) = 2.060

SECTION (1)UPPER WING DEPENDENT VARIABLE CP

Y/BW	.2990	.3640	.4270	.5340	.6730	.7800	.8670
X/CW							
.000	-.9167	-.5149	.0873	.5135	.5550	.4592	.3693
.020				-.2746	-.1392	-.3327	-.4878
.025			-.1943				
.040		-.2192					
.045			-.2493				
.050	-.3139			-.3626	-.4164	-.5090	-.6534
.080				-.4964			
.085			-.3412				
.086		-.1113					
.094	-.3010						
.150				-.6769	-.7021	-.7302	-.7763
.163		.0000					
.177			-.3951				
.193		-.1553					
.229	-.0653						
.250				-.7537	-.8126	-.8391	-.8412
.274			-.4474				
.339		-.3588					
.362	-.0373						
.400				-.7231	-.8212		-.8188
.402			-.5300				
.497	.0000						
.550				-.5588	-.7886		
.565			.0000				
.600							-.7026
.650						-.6926	
.700	-.2690				-.2609		
.725				-.3364			
.750						-.5427	-.6589
.760			-.2538				
.775				-.2663	-.5509		
.808			-.1961				
.834	-.1697						
.850				-.2331	-.3864	-.4584	
.857			-.2379				
.865	-.1535						
.900	-.1558			-.2094			-.6614
.935			-.2026		-.1766		
.950				-.1382		-.4807	
.933			-.1874				
.965	-.2014						

ARC11-716 IA14 01+T12+$12N25+AT13 UPPER WING (R21U32)

ALPHA0(11) = 9.955 BETA0 (8) = 4.080

SECTION (3)UPPER WING DEPENDENT VARIABLE CP

Y/BW	.2990	.3640	.4270	.5340	.6730	.7800	.8870
X/CW							
.000	-.4316	-.2584	-.0694	.3302	.5115	.4352	.3501
.020				-.2569	-.1558	-.3581	-.4891
.025			-.3004				
.040		-.1690					
.045			-.2205				
.050	-.3794			-.3895	-.4204	-.3120	-.6587
.080				-.4016			
.085			-.2547				
.086		-.1287					
.094	-.3476						
.150				-.6303	-.6383	-.7293	-.7761
.163		.0000					
.177			-.3226				
.193		-.1763					
.229	-.0429						
.250				-.5945	-.6037	-.6303	-.6401
.274			-.3727				
.339		-.3235					
.352	-.0482						
.400				-.6070	-.6364		-.6565
.402			-.4712				
.497	.0000						
.550				-.3917	-.6064		
.565			.0000				
.600							-.7372
.650						-.6990	
.700	-.1645				-.2578		
.725				-.0798			
.750						-.5584	-.6056
.760			-.2720				
.775				-.2287	-.3025		
.806			-.2473				
[illegible]	-.2191						
[illegible]				-.2134	-.2124	-.4894	
[illegible]			-.2493				
[illegible]	-.1038						
.900	-.198			-.1979			-.6740
.925			-.2359		-.1397		
.952				-.1707		-.5487	
.955			-.2026				
.965	-.2262						

ARC11-716 IA14 (A+T12+S12N25+AT10 UPPER WING (RB1U32)

ALPHAO(11) = 10.040 BETAO (8) = 6.140

SECTION (1)UPPER WING DEPENDENT VARIABLE CP

Y/BW	.2990	.3640	.4270	.5340	.6730	.7800	.8870
X/CW							
.000	-.5950	-.2029	-.1177	.2095	.4806	.4118	.3332
.020				-.3493	-.1621	-.3359	-.4897
.025			-.1374				
.040		-.1409					
.045			-.1804				
.050	-.4672			-.4157	-.4241	-.5069	-.6557
.080				-.4931			
.085			-.2079				
.086		-.1108					
.094	-.4074						
.150				-.5529	-.6884	-.7199	-.7705
.163		.0000					
.177			-.2815				
.193		-.1975					
.229	-.0565						
.250				-.5608	-.7824	-.8228	-.8445
.274			-.3348				
.339		-.3324					
.362	-.0363						
.400				-.5194	-.8053		-.8440
.402			-.3736				
.497	.0000						
.550				-.3479	-.5091		
.565			.0000				
.600							-.7763
.650						-.7543	
.700	-.1343				-.2542		
.725				-.3094			
.750						-.6557	-.7159
.760			-.2872				
.775				-.2875	-.2601		
.808			-.2783				
.834	-.2490						
.850				-.2708	-.1947	-.3484	
.857			-.2736				
.865	-.2129						
.900	-.2152			-.2405			-.6607
.905			-.2462		-.1024		
.950				-.2133		-.0822	
.953			-.2076				
.965	-.2132						

ARC11-716 IA14 O1+T12+S12N25+AT1D UPPER WING (RB1U32)

ALPHAO(11) = 10.030 BETAO (10) = 8.160

SECTION (11)UPPER WING DEPENDENT VARIABLE CP

Y/BW	.2990	.3640	.4270	.5340	.6730	.7800	.8870
X/CW							
.000	-.6503	-.1465	-.1486	-.0102	.4509	.3952	.3300
.020				-.4342	-.1807	-.3189	-.4779
.025			-.1295				
.040		-.1059					
.045			-.1511				
.050	-.5666			-.4155	-.4300	-.4876	-.6390
.080				-.4395			
.085			-.1791				
.086		-.1054					
.094	-.5078						
.150				-.4254	-.6670	-.6963	-.7502
.163		.0000					
.177			-.2539				
.193		-.2080					
.229	-.0976						
.250				-.4660	-.7238	-.7962	-.8231
.274			-.2994				
.339		-.3050					
.362	-.0336						
.400				-.3411	-.6430		-.8471
.402			-.2987				
.497	.0000						
.550				-.2872	-.3998		
.565			.0000				
.600							-.7687
.650						-.6339	
.700	-.1075				-.2561		
.725				-.3165			
.750						-.2376	-.6758
.760			-.2834				
.775				-.3208	-.3003		
.808			-.2763				
.834	-.2505						
.850				-.2936	-.2073	-.0964	
.857			-.2667				
.865	-.2169						
.900	-.2154			-.2616			-.6490
.905			-.2305		-.1160		
.950				-.2299		-.0322	
.953			-.1996				
.965	-.2030						

ARC11-716 IA14 D1+T12+S12N25+AT10 UPPER WING (RB1U32)

ALPHAO(11) = 10.070 BETAO (11) = 10.230

SECTION (1)UPPER WING DEPENDENT VARIABLE CP

Y/BW	.2990	.3640	.4270	.5340	.6730	.7800	.8870
X/CW							
.000	-.6223	-.1387	-.1570	-.0851	.3924	.3966	.3249
.020				-.4240	-.1705	-.2974	-.4524
.025			-.1319				
.040		-.1218					
.045			-.1560				
.050	-.5176			-.3315	-.4374	-.4681	-.6160
.080				-.3292			
.085			-.1811				
.086		-.1192					
.094	-.4642						
.150				-.2942	-.5303	-.6747	-.7281
.163		.0000					
.177			-.2328				
.193		-.2169					
.229	-.1925						
.250				-.2689	-.6168	-.7671	-.8038
.274			-.2753				
.339		-.2513					
.362	-.0579						
.400				-.2282	-.4443		-.8586
.402			-.2751				
.497	.0000						
.550				-.2324	-.3524		
.565			.0000				
.600							-.7707
.650						-.4116	
.700	-.0999				-.2583		
.725				-.2713			
.750						-.2466	-.7082
.760			-.2976				
.775				-.2898	-.2923		
.800			-.2718				
.834	-.2531						
.850				-.2499	-.2045	-.0997	
.857			-.2519				
.865	-.2277						
.900	-.2167			-.2257			-.3794
.905			-.2129		-.1445		
.950				-.1996		-.0602	
.953			-.1875				
.965	-.1933						

ARC11-716 IA14 O1+T12+S12N25+AT10 UPPER WING (RB1U33) (17 APR 74)

REFERENCE DATA

SREF = 2.4210 SQ.FT. XMRP = 29.5800 INCHES
LREF = 38.7090 INCHES YMRP = .0000 INCHES
BREF = 38.7090 INCHES ZMRP = .0000 INCHES
SCALE = .0300 SCALE

PARAMETRIC DATA

MACH = 1.250 ELEVON = .000
RUDDER = .000 SPOBRK = .000

ALPHAO(1) = -10.340 BETAO (1) = -9.910

SECTION (1)UPPER WING DEPENDENT VARIABLE CP

Y/BW	.2990	.3640	.4270	.5340	.6730	.7800	.8870
X/CW							
.000	.0217	-.0819	.3256	.5696	.5002	.4176	.4462
.020				.7277	.6786	.6967	.6954
.025			.5336				
.040		.1016					
.045			.4935				
.050	.0449			.5327	.5308	.5371	.5275
.060				.3669			
.065			.3921				
.080		.2602					
.094	.0902						
.150				.1310	.1621	.2154	.2240
.163		.0000					
.177			.1909				
.193		.2758					
.229	.1153						
.250				-.0366	-.0270	-.0165	-.0338
.274			.0565				
.330		.0629					
.362	.2326						
.400				-.1980	-.2139		-.2724
.402			-.1410				
.497	.0000						
.500				-.1787	-.2751		
.501			.0000				
.600							-.3428
.650						-.3384	
.700	.1790				-.0964		
.725				.0913			
.750						-.1516	-.3059
.760			.0815				
.775				.1894	.1429		
.809			.2493				
.834	.1498						
.850				.2656	.2167	.0788	
.857			.3032				
.865	.2857						
.900	.3064			.3247			.0756
.905			.3375		.3109		

ARC11-716 IA14 O1+T12+S12N25+AT10 UPPER WING (RB1U33)

ALPHAO(1) = -10.340 BETAO (1) = -9.910

SECTION (1)UPPER WING DEPENDENT VARIABLE CP

Y/BW	.2990	.3640	.4270	.5340	.6730	.7800	.8870
X/CW							
.950				.3244		.2907	
.953			.3218				
.965	.3002						

ALPHAO(1) = -10.260 BETAO (2) -7.920

SECTION (1)UPPER WING DEPENDENT VARIABLE CP

Y/BW	.2990	.3640	.4270	.5340	.6730	.7800	.8870
X/CW							
.000	-.0080	-.1076	.2768	.5228	.4508	.3648	.3990
.020				.6944	.5448	.6622	.6627
.025			.4862				
.040		.0626					
.045			.4470				
.050	.0144			.5068	.5079	.5127	.5059
.080				.3440			
.085			.3551				
.086		.2098					
.094	.0624						
.130				.1172	.1531	.2012	.2113
.163		.0000					
.177			.1675				
.193		.2425					
.229	.0701						
.250				-.0446	-.0345	-.0218	-.0407
.274			.0362				
.339		.0414					
.362	.2048						
.400				-.2047	-.2134		-.2705
.402			-.1526				
.497	.0000						
.550				-.1007	-.2767		
.565			.0000				
.600							-.3492
.650						-.3387	
.700	.1872				-.0990		
.725				.0950			
.750						-.1042	-.3101
.760			.0777				
.775				.1767	.1331		
.838			.2225				
.834	.1378						
.850				.2337	.1915	.1569	

ARC11-716 IA14 O1+T12+S12N25+AT10 UPPER WING (R51U33)

ALPHAO(1) = -10.260 BETAO (2) = -7.920

SECTION (1)UPPER WING DEPENDENT VARIABLE CP

Y/BW	.2990	.3640	.4270	.5340	.6730	.7800	.8870
X/CW							
.857			.2622				
.865	.2681						
.900	.2798			.3067			.1107
.905			.3148		.2988		
.950				.3104		.2905	
.953			.3048				
.965	.2774						

ALPHAO(1) = -10.250 BETAO (3) = -5.920

SECTION (1)UPPER WING DEPENDENT VARIABLE CP

Y/BW	.2990	.3640	.4270	.5340	.6730	.7800	.8870
X/CW							
.000	-.0517	-.1679	.2094	.4660	.3819	.2986	.3373
.020				.6661	.6080	.6297	.6273
.025			.4399				
.040		.0177					
.045			.4057				
.050	-.0165			.4917	.4920	.4936	.4846
.080				.3374			
.085			.3242				
.086		.1649					
.094	.0271						
.150				.1163	.1515	.1962	.2027
.163		.0000					
.177			.1631				
.193		.2102					
.229	.0487						
.250				-.0636	-.0319	-.0209	-.0423
.274			.0342				
.339		.0340					
.362	.1704						
.400				-.2177	-.2071		-.2681
.402			-.1445				
.497	.0000						
.550				.0158	-.2502		
.555			.0000				
.600							-.3450
.650						-.3168	
.700	.2044				-.1006		
.725				.0827			
.750						.0536	-.2917
.760			.0720				

ARC11-716 IA14 O1+T12+S12N25+AT10 UPPER WING (RB1U33)

ALPHAO(1) = -10.250 BETAO (3) = -5.920

SECTION (1)UPPER WING DEPENDENT VARIABLE CP

Y/BW	.2990	.3340	.4270	.5340	.6730	.7800	.8870
X/CW							
.775				.1358	.1171		
.808			.1786				
.834	.1147						
.850				.1533	.1461	.1651	
.857			.1996				
.865	.2307						
.900	.2291			.2247			.1644
.905			.2713		.2524		
.950				.2699		.2505	
.953			.2698				
.965	.2384						

ALPHAO(1) = -10.240 BETAO (4) = -3.960

SECTION (1)UPPER WING DEPENDENT VARIABLE CP

Y/BW	.2990	.3340	.4270	.5340	.6730	.7800	.8870
X/CW							
.000	-.0854	-.2184	.1447	.4086	.3234	.2373	.2746
.020				.6386	.5747	.5990	.5962
.025			.3961				
.040		-.0352					
.045			.3707				
.050	-.0405			.4734	.4744	.4782	.4691
.080				.3275			
.085			.3004				
.086		.1160					
.094	.0080						
.150				.1176	.1568	.1939	.1992
.163		.0000					
.177			.1590				
.193		.1888					
.229	.0204						
.250				-.0553	-.0274	-.0144	-.0403
.274			.0367				
.339		.0294					
.362	.1455						
.400				-.1890	-.1894		-.2672
.402			-.1282				
.497	.0000						
.550				.1094	-.1240		
.565			.0000				
.600							-.3290
.650						-.0410	

ARC11-716 IA14 O1+T12+S12N25+AT10 UPPER WING (RB1U33)

ALPHAO(3) = -10.240 BETAO (4) = -3.960

SECTION (1)UPPER WING DEPENDENT VARIABLE CP

X/CW \ Y/BW	.2990	.3640	.4270	.5340	.6730	.7800	.8870
.700	.2193				-.1038		
.725				.0838			
.750						.0749	-.0275
.760			.0652				
.775				.1148	.0945		
.808			.1445				
.834	.1001						
.850				.1177	.1059	.1346	
.857			.1590				
.865	.2015						
.900	.1935			.1586			.2207
.905			.2110		.1943		
.950				.2246		.2254	
.953			.2308				
.965	.2004						

ALPHAO(1) = -10.250 BETAO (5) = -1.970

SECTION (1)UPPER WING DEPENDENT VARIABLE CP

X/CW \ Y/BW	.2990	.3640	.4270	.5340	.6730	.7800	.8870
.000	-.1258	-.2645	.0905	.3519	.2610	.1804	.2217
.020				.6127	.5359	.5664	.5615
.025			.3514				
.040		-.0752					
.045			.3337				
.050	-.0662			.4613	.4543	.4621	.4495
.080				.3277			
.085			.2878				
.086		.0791					
.094	-.0175						
.150				.1275	.1605	.1926	.1943
.163		.0000					
.177			.1603				
.193		.1749					
.229	-.0012						
.250				-.0464	-.0240	-.0118	-.0399
.274			.0440				
.339		.0316					
.362	.1268						
.400				-.1621	-.1698		-.2650
.402			-.1068				
.497	.0000						

ARC11-716 IA14 O1+T12+S12N25+AT10 UPPER WING (RB1U33)

ALPHAO(1) = -10.250 BETAO (5) = -1.970

SECTION (1)UPPER WING DEPENDENT VARIABLE CP

Y/BW	.2990	.3640	.4270	.5340	.6730	.7800	.8870
X/CW							
.550				.1522	.1030		
.565			.0000				
.600							-.2575
.650						.0109	
.700	.2212				-.1092		
.725				.0738			
.750						.0466	.0436
.760			.0552				
.775				.0968	.0747		
.800			.1183				
.834	.0890						
.850				.0901	.0794	.0912	
.857			.1298				
.865	.1695						
.900	.1700			.1217			.1856
.905			.1801		.1473		
.950				.1867		.1905	
.953			.1987				
.965	.1720						

ALPHAO(1) = -10.160 BETAO (6) = .020

SECTION (1)UPPER WING DEPENDENT VARIABLE CP

Y/BW	.2990	.3640	.4270	.5340	.6730	.7800	.8870
X/CW							
.000	-.1576	-.2809	.0867	.3189	.2047	.1257	.1638
.020				.5814	.4927	.5311	.5207
.025			.3298				
.040		-.1047					
.045			.3158				
.050	-.0740			.4412	.4269	.4379	.4202
.080				.3147			
.085			.2706				
.086		.0532					
.094	-.0321						
.150				.2289	.1549	.1820	.1820
.163		.0000					
.177			.1610				
.193		.1644					
.229	-.0162						
.250				-.0481	-.0306	-.0177	-.0432
.274			.0480				
.339		.0316					

ARC11-716 IA14 O1+T12+S12N25+AT10 UPPER WING (RB1U33)

ALPHAO(1) = -10.160 BETAO (6) = .020

SECTION (1)UPPER WING DEPENDENT VARIABLE CP

Y/BW	.2990	.3640	.4270	.5340	.6730	.7800	.8870
X/CW							
.362	.1153						
.400				-.1508	-.1607		-.2549
.402			-.1018				
.497	.0000						
.550				.1511	.1233		
.565			.0000				
.600							-.0533
.650						.0074	
.700	.2080				-.1164		
.725				.0613			
.750						.0305	-.0172
.750			.0454				
.775				.0780	.0603		
.808			.0901				
.834	.0798						
.850				.0608	.0600	.0608	
.857			.0966				
.865	.1264						
.900	.1474			.0804			.1288
.905			.1516		.1038		
.950				.1519		.1433	
.953			.1691				
.965	.1456						

ALPHAO(1) = -10.160 BETAO (7) = 2.040

SECTION (1)UPPER WING DEPENDENT VARIABLE CP

Y/BW	.2990	.3640	.4270	.5340	.6730	.7800	.8870
X/CW							
.000	-.1762	-.1960	.1218	.2780	.1515	.0872	.1118
.020				.5373	.4488	.4942	.4787
.025			.3088				
.040		-.0755					
.045			.2886				
.050	-.0746			.4104	.3989	.4112	.3925
.080				.2953			
.085			.2508				
.086		.0625					
.094	-.0460						
.150				.1223	.1513	.1720	.1698
.163		.0000					
.177			.1545				
.193		.1656					

ARC11-716 IA14 O1+T12+S12N25+AT10 UPPER WING (RB1U33)

ALPHAO(1) = -10.160 BETAO (7) = 2.040

SECTION (1)UPPER WING DEPENDENT VARIABLE CP

Y/BW	.2990	.3640	.4270	.5340	.6730	.7800	.8870
X/CW							
.229	-.0265						
.250				-.0281	-.0284	-.0177	-.0455
.274			.0480				
339		.0294					
.362	.1251						
.400				-.1097	-.1390		-.1519
.402			-.0909				
.497	.0000						
.550				.1688	.1169		
.565			.0000				
.600							-.0824
.650						-.0108	
.700	.2022				-.1200		
.725				.0680			
.750						.0159	-.0596
.760			.0364				
.775				.0786	.0456		
.808			.0695				
.834	.0689						
.850				.0602	.0430	.0376	
.857			.0574				
.865	.0978						
.900	.1197			.0657			.0826
.905			.1256		.0758		
.950				.1416		.1035	
.953			.1465				
.955	.1205						

ALPHAO(1) = -10.220 BETAO (8) = 4.080

SECTION (1)UPPER WING DEPENDENT VARIABLE CP

Y/BW	.2990	.3640	.4270	.5340	.6730	.7800	.8870
X/CW							
.000	-.1077	-.1116	.1322	.2202	.1224	.0350	.0560
.020				.4954	.4229	.4489	.4537
.025			.2884				
.040		-.0371					
.045			.2699				
.050	-.0480			.3837	.3847	.3766	.3729
.080				.2781			
.085			.2336				
.086		.0796					
.094	-.0616						

ARC11-716 IA14 O1+T12+S12N25+AT10 UPPER WING (RB1U33)

ALPHAO(1) = -10.220 BETAO (8) = 4.080

SECTION (1)UPPER WING DEPENDENT VARIABLE CP

Y/BW	.2990	.3640	.4270	.5340	.6730	.7800	.8870
X/CW							
.150				.1154	.1412	.1552	.1805
.163		.0000					
.177			.1489				
.193		.1651					
.229	-.0237						
.250				-.0312	-.0315	-.0234	.0352
.274			.0454				
.339		.0240					
.362	.1340						
.400				-.0839	.0247		.0170
.402			-.0950				
.497	.0000						
.550				.1570	.1099		
.565			.0000				
.600							-.0816
.650						.0019	
.700	.1991				-.1267		
.725				.0606			
.750						.0252	-.0621
.760			.0320				
.775				.0821	.0559		
.808			.0552				
.834	.0574						
.850				.0598	.0438	.0368	
.857			.0374				
.865	.0723						
.900	.0742			.0543			.0743
.905			.1187		.0740		
.950				.1248		.0929	
.953			.1653				
.965	.1351						

ALPHAO(1) = -10.230 BETAO (9) = 6.080

SECTION (1)UPPER WING DEPENDENT VARIABLE CP

Y/BW	.2990	.3640	.4270	.5340	.6730	.7800	.8870
X/CW							
.000	-.2378	-.0911	.1126	.1871	.1256	.0180	.0304
.020				.4561	.4430	.4505	.4626
.025			.2647				
.040		-.0318					
.045			.2450				
.050	-.1130			.3537	.4074	.3868	.4270

ARC11-716 IA14 O1+T12+S12N25+AT10 UPPER WING (RB1U33)

ALPHAO(1) = -10.230 BETAO (9) = 6.080

SECTION (1)UPPER WING DEPENDENT VARIABLE CP

Y/BW	.2990	.3640	.4270	.5340	.6730	.7800	.8870
X/CW							
.080				.2521			
.095			.2067				
.086		.0675					
.094	-.0029						
.150				.1171	.1716	.1781	.2795
.163		.0000					
.177			.1271				
.193		.1548					
.229	-.0200						
.250				-.0011	.0009	.2311	.1041
.274			.0292				
.339		.0030					
.362	.1317						
.400				.2164	.1770		-.0570
.402			-.0731				
.497	.0000						
.550				.1547	.0737		
.565			.0000				
.600							-.1211
.650						-.0466	
.700	.2194				-.1335		
.725				.0487			
.750						-.0102	-.1022
.760			.0355				
.775				.0521	.0192		
.808			.0520				
.834	.0587						
.850				.0420	.0164	.0071	
.857			.0206				
.865	.0842						
.900	.0757			.0329			.0312
.905			.0736		.0483		
.950				.0853		.0619	
.953			.1271				
.965	.0985						

ARC11-716 IA14 O1+T12+S12N25+AT10 UPPER WING (RB1U33)

ALPHAO(1) = -10.230 BETAO (10) = 8.120

SECTION (1)UPPER WING DEPENDENT VARIABLE CP

Y/BW	.2990	.3640	.4270	.5340	.6730	.7800	.8870
X/CW							
.000	-.2637	-.0787	.1091	.2289	.0600	-.0610	-.0495
.020				.4945	.3713	.3905	.4129
.025			.2829				
.040		.0143					
.045			.2705				
.050	-.1149			.3827	.3639	.3440	.3972
.080				.2896			
.085			.2296				
.086		.0969					
.094	-.0841						
.150				.1381	.1440	.2254	.2734
.163		.0000					
.177			.1517				
.193		.1776					
.229	-.0175						
.250				-.0037	.0135	.2021	.1094
.274			.0576				
.339		.0175					
.362	.1611						
.400				.1642	.1455		-.0406
.402			-.0495				
.497	.0000						
.550				.1286	.0636		
.565			.0300				
.600							-.1239
.650						-.0506	
.700	.1750				-.1404		
.725				.0362			
.750						-.0216	-.0803
.760			.0224				
.775				.0303	.0073		
.808			.0128				
.834	.0343						
.850				.0100	-.0048	.0120	
.857			-.0157				
.865	.0339						
.900	.0245			-.0076			.0378
.905			.0044		.0350		
.950				.0160		.0518	
.953			.0537				
.965	.0423						

ARC11-716 IA14 O1+T12+S12N25+AT10 UPPER WING (RB1U33)

ALPHAO(1) = -10.240 BETAO (11) = 10.110

SECTION (1)UPPER WING DEPENDENT VARIABLE CP

Y/BW	.2990	.3640	.4270	.5340	.6730	.7800	.8870
X/CW							
.000	-.2463	-.1003	.0662	.1340	.0303	-.0649	-.0914
.020				.4356	.3471	.4242	.4177
.025			.2397				
.040		-.0446					
.045			.2321				
.050	-.1131			.3530	.3453	.4001	.4110
.080				.2610			
.085			.1956				
.086		.0612					
.094	-.0782						
.150				.1378	.1607	.3379	.2794
.163		.0000					
.177			.1143				
.193		.1560					
.229	-.0211						
.250				.0061	.1029	.2154	.1208
.274			.0374				
.339		-.0323					
.362	.1064						
.400				.2612	.1715		-.0388
.402			-.0729				
.497	.0000						
.550				.1256	.0584		
.565			.0000				
.600							-.1266
.650						-.0508	
.700	.1624				-.[illegible]437		
.725				.0300			
.750						-.0331	-.1160
.760			.0198				
.775				.0300	.0047		
.808			.0022				
.834	.0261						
.850				.0126	-.0046	-.0079	
.857			-.0255				
.865	.0579						
.900	.0256			-.0084			-.0160
.905			.0010		.0208		
.950				.0253		.0358	
.953			.0360				
.965	.0349						

ARC11-716 IA14 O1+T12+S12N25+AT10 UPPER WING (RB1U33)

ALPHAO(2) = -8.220 BETAO (1) = -9.940

SECTION (1)UPPER WING DEPENDENT VARIABLE CP

Y/BW	.2990	.3640	.4270	.5340	.6730	.7800	.8870
X/CW							
.000	.0248	-.0525	.3594	.6094	.5454	.4720	.5098
.020				.6799	.6416	.6569	.6664
.025			.5004				
.040		.1151					
.045			.4439				
.050	.0118			.4689	.4684	.4759	.4740
.080				.2975			
.085			.3218				
.086		.2289					
.094	.0493						
.150				.0559	.0864	.1425	.1667
.163		.0000					
.177			.1225				
.193		.2226					
.229	.0939						
.250				-.0927	-.0867	-.0735	-.0819
.274			-.0066				
.339		.0122					
.362	.1970						
.400				-.2436	-.2680		-.3184
.402			-.2017				
.497	.0000						
.550				-.2790	-.3308		
.565			.0000				
.600							-.3652
.650						-.3906	
.700	-.0063				-.1294		
.725				.0244			
.750						-.3410	-.3569
.760			.0419				
.775				.1543	.0322		
.808			.1943				
.834	.1172						
.850				.1722	.1203	-.0615	
.857			.1875				
.865	.2267						
.900	.2169			.1976			-.1813
.905			.2325		.1984		
.950				.2387		.0071	
.953			.2732				
.965	.2489						

ARC11-716 IA14 O1+T12+S12N25+AT10 UPPER WING (RB1U33)

ALPHAO(2) = -8.240 BETAO (2) = -7.960

SECTION (1)UPPER WING DEPENDENT VARIABLE CP

Y/BW	.2990	.3640	.4270	.5340	.6730	.7800	.8870
X/CW							
.000	-.0074	-.0058	.3149	.5586	.4949	.4182	.4609
.020				.6490	.6103	.6255	.6346
.025			.4532				
.040		.0580					
.045			.4013				
.050	-.0263			.4460	.4496	.4552	.4535
.080				.2793			
.085			.2854				
.086		.1937					
.094	.0220						
.150				.0441	.0785	.1301	.1544
.163		.0000					
.177			.1013				
.193		.1978					
.229	.0388						
.250				-.1096	-.0968	-.0790	-.0896
.274			-.0226				
.339		-.0167					
.362	.1707						
.400				-.2534	-.2735		-.3223
.402			-.2190				
.497	.0000						
.550				-.2857	-.3340		
.565			.0000				
.600							-.3772
.650						-.3927	
.700	.0651				-.1177		
.725				.0377			
.750						-.2734	-.3657
.760			.0443				
.775				.1551	.0615		
.800			.1832				
.834	.1095						
.850				.1712	.1225	-.0727	
.857			.1848				
.865	.2166						
.900	.2115			.2042			-.0801
.905			.2431		.1989		
.950				.2565		.0480	
.953			.2652				
.965	.2368						

ARC11-716 IA14 O1+T12+S12N25+AT10 UPPER WING (RB1U33)

ALPHAO(2) = -8.240 BETAO (3) = -5.960

SECTION (1)UPPER WING DEPENDENT VARIABLE CP

Y/BW	.2990	.3640	.4270	.5340	.6730	.7800	.8870
X/CW							
.000	-.0553	-.1352	.2535	.5014	.4335	.3614	.4124
.020				.6218	.5792	.5984	.6082
.025			.4126				
.040		.0193					
.045			.3636				
.050	-.0676			.4312	.4353	.4412	.4368
.060				.2674			
.065			.2566				
.066		.1491					
.094	-.0054						
.150				.0411	.0770	.1307	.1462
.163		.0000					
.177			.0942				
.193		.1711					
.229	.0201						
.250				-.1081	-.0936	-.0798	-.0948
.274			-.0307				
.339		-.0224					
.362	.1347						
.400				-.2510	-.2663		-.3223
.402			-.2108				
.497	.0000						
.550				-.2487	-.3244		
.565			.0000				
.600							-.3859
.650						-.3834	
.700	.1005				-.1167		
.725				.0500			
.750						-.2124	-.3595
.760			.0401				
.775				.1365	.0822		
.808			.1439				
.834	.0900						
.850				.1329	.1190	-.0162	
.857			.1437				
.865	.1921						
.900	.1767			.1495			-.0119
.905			.1851		.1754		
.950				.2035		.2084	
.953			.2281				
.965	.1970						

ARC11-716 IA14 O1+T12+S12N25+AT10 UPPER WING (RB1U33)

ALPHAO(2) = -8.250 BETAO (4) = -3.980

SECTION (1)UPPER WING DEPENDENT VARIABLE CP

Y/BW	.2990	.3640	.4270	.5340	.6730	.7800	.8870
X/CW							
.000	-.0882	-.1776	.1949	.4436	.3733	.3175	.3624
.020				.5953	.5445	.5764	.5797
.025			.3759				
.040		-.0307					
.045			.3357				
.050	-.0801			.4164	.4210	.4305	.4200
.080				.2626			
.085			.2366				
.086		.1110					
.094	-.0236						
.150				.0432	.0877	.1351	.1436
.163		.0000					
.177			.0948				
.193		.1527					
.229	-.0045						
.250				-.1278	-.0879	-.0736	-.0953
.274			-.0294				
.339		-.0254					
.362	.1131						
.400				-.2615	-.2494		-.3158
.402			-.1948				
.497	.0000						
.550				-.1292	-.3010		
.565			.0000				
.600							-.3810
.650						-.3672	
.700	.1376				-.1107		
.725				.0466			
.750						-.0746	-.3378
.760			.0430				
.775				.1027	.0861		
.800			.1272				
.834	.0775						
.850				.0909	.1037	.1110	
.857			.1212				
.865	.1714						
.900	.1551			.1011			.0486
.905			.1534		.1529		
.950				.1543		.1965	
.953			.1703				
.965	.1537						

ARC11-716 IA14 O1+T12+S12N25+AT10 UPPER WING (RB1U33)

ALPHAO(2) = -8.250 BETAO (5) = -1.990

SECTION (1)UPPER WING DEPENDENT VARIABLE CP

Y/BW	.2990	.3640	.4270	.5340	.6730	.7800	.8870
X/CW							
.000	-.1280	-.2177	.1422	.3916	.3210	.2640	.3100
.020				.5700	.5148	.5446	.5457
.025			.3363				
.040		-.0678					
.045			.3044				
.050	-.0941			.4032	.4096	.4142	.4003
.060				.2597			
.065			.2210				
.086		.0763					
.094	-.0504						
.150				.0523	.0941	.1326	.1368
.163		.0000					
.177			.1021				
.193		.1424					
.229	-.0214						
.250				-.0878	-.0787	-.0694	-.0946
.274			-.0161				
.339		-.0193					
.362	.0939						
.400				-.2158	-.2358		-.3095
.402			-.1800				
.497	.0000						
.550				.0379	-.2572		
.565			.0000				
.600							-.3743
.650						-.2136	
.700	.1579				-.1119		
.725				.0675			
.750						.0379	-.1421
.760			.0368				
.775				.1000	.0699		
.808			.1000				
.834	.0645						
.850				.0828	.0748	.1025	
.857			.0936				
.865	.1455						
.900	.1310			.0872			.1230
.905			.1242		.1210		
.950				.1366		.1002	
.953			.1468				
.965	.1285						

ARC11-716 IA14 O1+T12+S12N25+AT10 UPPER WING (RB1U33)

ALPHAO(2) = -8.250 BETAO (6) = .010

SECTION (1)UPPER WING DEPENDENT VARIABLE CP

Y/BW	.2990	.3640	.4270	.5340	.6730	.7800	.8870
X/CW							
.000	-.1645	-.2475	.1690	.3673	.2881	.2100	.2483
.020				.5440	.4878	.5125	.5048
.025			.3214				
.040		-.0944					
.045			.2946				
.050	-.1175			.3887	.3958	.3933	.3730
.080				.2549			
.085			.2147				
.086		.0462					
.094	-.0702						
.150				.0645	.0974	.1240	.1232
.163		.0000					
.177			.1092				
.193		.1379					
.229	-.0405						
.250				-.0726	-.0744	-.0716	-.1003
.274			-.0047				
.339		-.0075					
.362	.0839						
.400				-.1951	-.2227		-.3152
.402			-.1540				
.497	.0000						
.550				.0988	-.0330		
.565			.0000				
.600							-.3645
.650						-.0295	
.700	.1628				-.1140		
.725				.0590			
.750						.0265	.0040
.760			.0282				
.775				.0790	.0498		
.808			.0739				
.834	.0539						
.850				.0593	.0475	.0644	
.857			.0649				
.865	.1134						
.900	.1116			.0569			.1627
.905			.1028		.0799		
.950				.1098		.1470	
.953			.1239				
.965	.1033						

ARC11-716 IA14 O1+T12+S12N25+AT10 UPPER WING (RB1U33)

ALPHAO(2) = -0.230 BETAO (7) = 2.020

SECTION (1)UPPER WING DEPENDENT VARIABLE CP

X/CW \ Y/BW	.2990	.3640	.4270	.5340	.6730	.7800	.8870
.000	-.1868	-.1702	.1689	.3252	.2411	.1588	.1911
.020				.5059	.4508	.4772	.4690
.025			.2920				
.040		-.0747					
.045			.2650				
.050	-.1384			.3634	.3734	.3701	.3494
.080				.2431			
.085			.1990				
.086		.0483					
.094	-.0776						
.150				.0723	.0949	.1147	.1147
.163		.0000					
.177			.1062				
.193		.1335					
.229	-.0529						
.250				-.0676	-.0746	-.0734	-.1016
.274			-.0011				
.339		-.0102					
.362	.0887						
.400				-.1833	-.2111		-.3100
.402			-.1479				
.497	.0000						
.550				.1218	.0697		
.565			.0000				
.600							-.1474
.650						-.0141	
.700	.1549				-.1199		
.725				.0499			
.750						.0090	-.0247
.760			.0192				
.775				.0642	.0353		
.800			.0537				
.834	.0471						
.850				.0411	.0301	.0318	
.857			.0331				
.865	.0820						
.900	.0903			.0299			.1137
.905			.0782		.0528		
.950				.0760		.1098	
.953			.0961				
.965	.0748						

ARC11-716 IA14 O1+T12+S12N25+AT10 UPPER WING (RB1U33)

ALPHAO(2) = -8.230 BETAO (8) = 4.040

SECTION (1)UPPER WING DEPENDENT VARIABLE CP

Y/BW	.2990	.3640	.4270	.5340	.6730	.7800	.8870
X/CW							
.000	-.2091	-.0965	.1701	.2856	.1932	.1114	.1431
.020				.4779	.4099	.4335	.4261
.025			.2745				
.040		-.0334					
.045			.2473				
.050	-.1404			.3510	.3448	.3403	.3250
.080				.2377			
.085			.1841				
.086		.0594					
.094	-.0921						
.150				.0706	.0867	.1003	.1263
.163		.0000					
.177			.1012				
.193		.1369					
.229	-.0505						
.250				-.0670	-.0780	-.0797	-.0843
.274			.0050				
.339		-.0160					
.362	.1030						
.400				-.1838	-.2054		-.2808
.402			-.1520				
.497	.0000						
.550				.1017	.0668		
.565			.0000				
.600							-.0678
.650						.0146	
.700	.1356				-.1178		
.725				.0420			
.750						.0325	-.0260
.760			.0128				
.775				.0526	.0546		
.800			.0372				
.834	.0390						
.850				.0446	.0430	.0493	
.857			.0036				
.865	.0586						
.900	.0478			.0282			.1035
.905			.0464		.0620		
.950				.0721		.1091	
.955			.0860				
.965	.0450						

ARC11-716 IA14 OI+T12+S12N25+AT10 UPPER WING (R81U33)

ALPHAO(2) = -8.220 BETAO (9) = 6.050

SECTION (1)UPPER WING DEPENDENT VARIABLE CP

Y/BW	.2990	.3640	.4270	.5340	.6730	.7800	.8870
X/CW							
.000	-.2654	-.0861	.1309	.2922	.1972	.0994	.1134
.020				.4639	.4253	.4366	.4208
.025			.2387				
.040		-.0280					
.045			.2130				
.050	-.1487			.3354	.3646	.3450	.3204
.080				.2227			
.085			.1612				
.086		.0465					
.094	-.1105						
.150				.0726	.1104	.1165	.1137
.163		.0000					
.177			.0851				
.193		.1242					
.229	-.0448						
.250				-.0475	-.0529	-.0601	-.0624
.274			-.0012				
.339		-.0280					
.362	.0978						
.400				-.1423	-.0939		-.0570
.402			-.1455				
.497	.0000						
.550				.1292	.0726		
.565			.0000				
.600							-.1237
.650						-.0507	
.700	.1941				-.1297		
.725				.0435			
.750						-.0171	-.1001
.760			.0112				
.775				.0474	.0194		
.80^			.0439				
.834	.0413						
.850				.0313	.0096	.0047	
.857			.0134				
.865	.0630						
.900	.0591			.0152			.0391
.905			.0510		.0323		
.950				.0539		.0560	
.955			.0929				
.965	.0715						

ARC11-716 IA14 O1+T12+S12N25+AT10 UPPER WING (RB1U33)

ALPHAO(2) = -0.220 BETAO (10) = 8.100

SECTION (1)UPPER WING DEPENDENT VARIABLE CP

Y/BW	.2990	.3640	.4270	.5340	.6730	.7800	.8870
X/CW							
.000	-.3069	-.0768	.1114	.2367	.1187	.0156	.0417
.020				.4579	.3561	.3769	.3741
.025			.2772				
.040		-.0337					
.045			.2598				
.050	-.1645			.3429	.3158	.3136	.3020
.080				.2395			
.085			.2311				
.086		.0653					
.094	-.1201						
.150				.0796	.0939	.1115	.1393
.163		.0000					
.177			.1125				
.193		.1601					
.229	-.0394						
.250				-.0532	-.0556	-.0445	-.0175
.274			.0169				
.339		-.0072					
.362	.1468						
.400				-.0897	-.0072		-.0580
.402			-.1197				
.497	.0000						
.550				.0899	.0564		
.565			.0000				
.600							-.1445
.650						-.0567	
.700	.1205				-.1380		
.725				.0330			
.750						-.0218	-.1181
.760			.0099				
.775				.0317	.0086		
.808			.0107				
.834	.0220						
.850				.0053	-.0111	-.0194	
.857			-.0225				
.865	.0372						
.900	.0114			-.0181			.0059
.905			-.0031		.0029		
.950				-.0074		.0189	
.953			.0201				
.965	.0111						

ARC11-716 IA14 Q1+T12+S12N25+AT10 UPPER WING (RB1U33)

ALPHAO(2) = -8.220 BETAO (11) = 10.130

SECTION (1)UPPER WING DEPENDENT VARIABLE CP

Y/BW	.2990	.3640	.4270	.5340	.6730	.7800	.8870
X/CW							
.000	-.3098	-.0914	.0681	.1877	.0849	-.0261	.0324
.020				.4385	.3332	.3451	.3945
.025			.2310				
.040		-.0477					
.045			.2180				
.050	-.1508			.3388	.2997	.2839	.3572
.080				.2301			
.085			.1669				
.086		.0484					
.094	-.1091						
.150				.0787	.0887	.0988	.1902
.163		.0000					
.177			.0968				
.193		.1294					
.229	-.0388						
.250				-.0498	-.0517	.0215	.0496
.274			.0003				
.339		-.0480					
.362	.0858						
.400				-.0529	.0055		-.0400
.402			-.1439				
.497	.0000						
.550				.0932	.0841		
.565			.0000				
.600							-.1366
.650						-.0600	
.700	.1013				-.1415		
.725				.0468			
.750						-.0212	-.1295
.760			.0135				
.775				.0395	.0189		
.808			-.0020				
.834	.0031						
.850				.0017	-.0103	-.0098	
.857			-.0312				
.865	.0178						
.900	.0036			-.0274			-.0067
.905			-.0188		.0016		
.950				-.0116		.0158	
.953			-.0121				
.965	.0041						

ARC11-716 IA14 O1+T12+S12N25+AT10 UPPER WING (RB1U33)

ALPHAO(3) = -6.280 BETAO (1) = -9.970

SECTION (1)UPPER WING DEPENDENT VARIABLE CP

Y/BW	.2990	.3640	.4270	.5340	.6730	.7800	.8870
X/CW							
.000	.0346	-.0337	.3918	.6424	.6009	.5377	.5773
.020				.6318	.6110	.6208	.6335
.025			.4545				
.040		.1321					
.045			.3833				
.050	.0040			.4107	.4154	.4241	.4140
.060				.2363			
.065			.2428				
.066		.1917					
.094	.0146						
.150				-.0137	.0222	.0832	.1042
.163		.0000					
.177			.0666				
.193		.1787					
.229	.0653						
.250				-.1612	-.1514	-.1409	-.1371
.274			-.0726				
.339		-.0453					
.362	.1653						
.400				-.2892	-.3276		-.3631
.402			-.2459				
.497	.0000						
.550				-.3301	-.3719		
.565			.0000				
.600							-.3844
.650						-.4302	
.700	-.1498				-.1496		
.725				-.0474			
.750						-.4209	-.3972
.760			-.0015				
.775				.0926	-.1653		
.808			.1698				
.834	.0968						
.850				.1311	.0007	-.1625	
.857			.1560				
.865	.2022						
.900	.1888			.1418			-.2701
.905			.1643		.1525		
.950				.1533		-.0545	
.953			.1617				
.965	.1544						

ARC11-716 IA14 O1+T12+S12N25+AT10 UPPER WING (RB1U33)

ALPHAO(3) = -6.280 BETAO (2) = -7.990

SECTION (1)UPPER WING DEPENDENT VARIABLE CP

Y/BW	.2990	.3640	.4270	.5340	.6730	.7800	.8870
X/CW							
.000	.0019	-.0675	.3459	.5922	.5557	.4923	.5341
.020				.6000	.5813	.5908	.5999
.025			.4154				
.040		.0615					
.045			.3475				
.050	-.0447			.3869	.3988	.4029	.3918
.080				.2208			
.085			.2116				
.086		.1601					
.094	-.0195						
.150				-.0223	.0155	.0678	.0909
.163		.0000					
.177			.0487				
.193		.1500					
.229	.0210						
.250				-.1885	-.1563	-.1466	-.1455
.274			-.0870				
.339		-.0630					
.362	.1234						
.400				-.3238	-.3299		-.3697
.402			-.2629				
.497	.0000						
.550				-.3675	-.3793		
.565			.0000				
.600							-.4068
.650						-.4418	
.700	-.1153				-.1468		
.725				-.0605			
.750						-.4025	-.3996
.760			.0016				
.775				.0818	-.0920		
.808			.1617				
.834	.0863						
.850				.1132	.0222	-.1469	
.857			.1476				
.865	.1874						
.900	.1763			.1216			-.2471
.905			.1577		.1225		
.950				.1423		-.0798	
.953			.1727				
.965	.1664						

DATE 10 JAN 75 TABULATED PRESSURE DATA - IA14A - VOL. 6

ARC11-716 IA14 O1+T12+S12N25+AT10 UPPER WING (RB1U33)

ALPHAO(3) = -6.300 BETAO (3) = -6.000

SECTION (1)UPPER WING DEPENDENT VARIABLE CP

Y/BW	.2930	.3640	.4270	.5340	.6730	.7800	.8870
X/CW							
.000	-.0442	-.1142	.2978	.5373	.5089	.4475	.4878
.020				.5772	.5598	.5629	.5720
.025			.3845				
.040		.0095					
.045			.3176				
.050	-.0764			.3740	.3871	.3851	.3714
.080				.2143			
.085			.1895				
.086		.1272					
.094	-.0424						
.150				-.0189	.0146	.0601	.0831
.163		.0000					
.177			.0433				
.193		.1348					
.229	-.0103						
.250				-.1611	-.1514	-.1426	-.1495
.274			-.0852				
.339		-.0732					
.362	.0992						
.400				-.2917	-.3233		-.3706
.402			-.2644				
.497	.0000						
.550				-.3194	-.3730		
.565			.0000				
.600							-.4118
.650						-.4328	
.700	-.0471				-.1357		
.725				-.0197			
.750						-.3573	-.4031
.760			.0032				
.775				.1082	-.0319		
.808			.1316				
.834	.0675						
.850				.1131	.0466	-.1345	
.857			.1150				
.865	.1588						
.900	.1417			.1134			-.1791
.905			.1258		.1263		
.950				.1319		-.0787	
.953			.1346				
.965	.1293						

ARC11-716 IA14 O1+T12+S12N25+AT10 UPPER WING (RB1U33)

ALPHAO(3) = -6.260 BETAO (4) = -3.980

SECTION (1)UPPER WING DEPENDENT VARIABLE CP

Y/BW	.2990	.3640	.4270	.5340	.6730	.7800	.8870
X/CW							
.000	-.0781	-.1421	.2420	.4853	.4656	.3975	.4374
.020				.5585	.5291	.5371	.5424
.025			.3489				
.040		-.0239					
.045			.2912				
.050	-.0998			.3663	.3701	.3660	.3553
.080				.2143			
.085			.1794				
.086		.0966					
.094	-.0607						
.150				-.0167	.0131	.0554	.0784
.163		.0000					
.177			.0444				
.193		.1145					
.229	-.0178						
.250				-.1550	-.1481	-.1385	-.1522
.274			-.0790				
.339		-.0715					
.362	.0766						
.400				-.2852	-.3143		-.3665
.402			-.2506				
.497	.0000						
.550				-.2920	-.3601		
.565			.0000				
.600							-.4100
.650						-.4218	
.700	.0374				-.1226		
.725				.0126			
.750						-.2700	-.4090
.760			.0160				
.775				.1064	.0250		
.800			.1107				
.834	.0593						
.850				.0949	.0755	-.1278	
.857			.0944				
.865	.1442						
.900	.1259			.0915			-.1030
.905			.1110		.1219		
.930				.1124		.1084	
.955			.1262				
.965	.1174						

DATE 10 JAN 75 TABULATED PRESSURE DATA - IA14A - VOL. 6

ARC11-716 IA14 O1+T12+S12N25+AT10 UPPER WING (RB1U33)

ALPHAO(3) = -6.160 BETAO (5) = .030

SECTION (1)UPPER WING DEPENDENT VARIABLE CP

Y/BW	.2990	.3640	.4270	.5340	.6730	.7800	.8870
X/CW							
.000	-.1671	-.1917	.2308	.4574	.3662	.2919	.3342
.020				.5071	.4527	.4649	.4740
.025			.3039				
.040		-.0655					
.045			.2677				
.050	-.1566			.3356	.3246	.3189	.3086
.080				.1969			
.085			.1688				
.086		.0324					
.094	-.1071						
.150				-.0025	.0102	.0451	.0604
.163		.0000					
.177			.0618				
.193		.0998					
.229	-.0630						
.250				-.1306	-.1404	-.1362	-.1587
.274			-.0514				
.339		-.0472					
.362	.0478						
.400				-.2584	-.2861		-.3649
.402			-.2105				
.497	.0000						
.550				-.1060	-.3176		
.565			.0000				
.600							-.4097
.650						-.3759	
.700	.0867				-.1220		
.725				.0359			
.750						-.0425	-.2613
.760			.0098				
.775				.0651	.0440		
.808			.0556				
.834	.0283						
.850				.0453	.0469	.0562	
.857			.0355				
.865	.0914						
.900	.0742			.0273			-.0095
.905			.0572		.0682		
.950				.0533		.1352	
.953			.0702				
.965	.0530						

ARC11-716 IA14 O1+T12+S12N25+AT10 UPPER WING (RB1U33)

ALPHAO(3) = -6.320 BETAO (6) = 2.000

SECTION (1)UPPER WING DEPENDENT VARIABLE CP

Y/BW	.2990	.3640	.4270	.5340	.6730	.7800	.8870
X/CW							
.000	-.1933	-.1169	.2476	.4090	.3083	.2317	.2726
.020				.4696	.4191	.4405	.4434
.025			.3045				
.040		-.0445					
.045			.2716				
.050	-.1870			.3167	.3085	.3057	.2916
.080				.1799			
.085			.1671				
.086		.0503					
.094	-.1095						
.150				-.0010	.0135	.0494	.0545
.163		.0000					
.177			.0600				
.193		.1102					
.229	-.0705						
.250				-.1223	-.1326	-.1338	-.1610
.274			-.0452				
.339		-.0421					
.362	.0723						
.400				-.2436	-.2721		-.3604
.402			-.1972				
.497	.0000						
.550				-.0143	-.2587		
.565			.0000				
.600							-.4110
.650						-.1469	
.700	.0864				-.1249		
.725				.0301			
.750						-.0032	-.1721
.760			.0003				
.775				.0494	.0312		
.808			.0379				
.834	.0212						
.850				.0267	.0223	.0445	
.857			.0113				
.865	.0622						
.900	.0588			.0034			.1259
.905			.0385		.0416		
.950				.0285		.1143	
.953			.0491				
.965	.0308						

DATE 10 JAN 75 TABULATED PRESSURE DATA - IA14A - VOL. 6 (RB1U33)

ARC11-716 IA14 O1+T12+S12N25+AT10 UPPER WING

ALPHAO(3) = -6.330 BETAO (7) = 4.070

SECTION (1)UPPER WING DEPENDENT VARIABLE CP

Y/BW	.2990	.3640	.4270	.5340	.6730	.7800	.8870
X/CW							
.000	-.2284	-.0709	.2260	.3696	.2576	.1817	.2673
.020				.4408	.3830	.4012	.4431
.025			.2752				
.040		-.0107					
.045			.2369				
.050	-.1992			.2992	.2870	.2787	.3056
.080				.1710			
.085			.1579				
.086		.0576					
.094	-.1194						
.150				.0011	.0118	.0365	.0720
.163		.0000					
.177			.0581				
.193		.1189					
.229	-.0598						
.250				-.1174	-.1353	-.1155	-.1407
.274			-.0409				
.339		-.0384					
.362	.0895						
.400				-.2365	-.2649		-.3467
.402			-.1972				
.497	.0000						
.550				.0132	-.0176		
.565			.0000				
.600							-.3802
.650						-.0292	
.700	.0760				-.1232		
.725				.0411			
.750						.0154	-.0032
.760			-.0092				
.775				.0630	.0414		
.800			.0369				
.834	.0121						
.850				.0306	.0279	.0445	
.857			.0097				
.865	.0360						
.900	.0449			.0069			.1408
.905			.0465		.0375		
.950				.0333		.1102	
.955			.0729				
.965	.0542						

ARC11-716 IA14 O4+T12+S12N25+AT10 UPPER WING (RB1U33)

ALPHAO(3) = -6.380 BETAO (8) = 6.050

SECTION (1)UPPER WING DEPENDENT VARIABLE CP

Y/BW	.2990	.3640	.4270	.5340	.6730	.7800	.8870
X/CW							
.000	-.2927	-.0789	.1386	.3338	.2581	.1606	.1928
.020				.4170	.3942	.4029	.3924
.025			.2262				
.040		-.0174					
.045			.2064				
.050	-.2052			.2963	.3081	.2918	.2647
.060				.1913			
.085			.1451				
.086		.0504					
.094	-.1346						
.150				.0368	.0395	.0539	.0527
.163		.0000					
.177			.0575				
.193		.1050					
.229	-.0519						
.250				-.0922	-.1102	-.1180	-.1498
.274			-.0192				
.339		-.0468					
.362	.0050						
.400				-.1805	-.2255		-.3017
.402			-.1651				
.497	.0000						
.550				.0609	.0197		
.565			.0000				
.600							-.1518
.650						-.0663	
.700	.1134				-.1315		
.725				.0136			
.750						-.0324	-.0947
.760			-.0077				
.775				.0207	-.0013		
.808			.0152				
.834	.0099						
.850				.0037	-.0125	-.0084	
.857			-.0161				
.865	.0375						
.900	.0297			-.0112			.0589
.905			.0168		.0100		
.950				.0107		.0468	
.953			.0334				
.965	.0089						

ARC11-716 IA14 O1+T12+S12N25+AT10 UPPER WING (RB1U53)

ALPHAO(3) = -6.270 BETAO (9) = 8.100

SECTION (1)UPPER WING DEPENDENT VARIABLE CP

Y/BW	.2990	.3640	.4270	.5340	.6730	.7800	.8870
X/CW							
.000	-.3482	-.0531	.1242	.2351	.1852	.0966	.1276
.020				.3793	.3474	.3706	.3539
.025			.2090				
.040		.0218					
.045			.2043				
.050	-.2043			.2753	.2793	.2704	.2452
.080				.1798			
.085			.1686				
.086		.0915					
.094	-.1408						
.150				.0320	.0323	.0505	.0523
.163		.0000					
.177			.0618				
.193		.1397					
.229	-.0276						
.250				-.0959	-.1103	-.1100	-.1427
.274			-.0228				
.339		-.0418					
.362	.1208						
.400				-.1663	-.1850		-.2719
.402			-.1785				
.497	.0000						
.550				.0619	.0297		
.565			.0000				
.600							-.1507
.650						-.0720	
.700	.0857				-.1374		
.725				.0004			
.750						-.0371	-.1318
.760			-.0178				
.775				.0053	-.0122		
.800			-.0087				
.834	.0047						
.850				-.0192	-.0261	-.0316	
.857			-.0443				
.865	.0211						
.900	-.0093			-.0331			.0226
.905			-.0247		-.0189		
.950				-.0252		.0159	
.953			-.0041				
.965	-.0312						

ARC11-716 IA14 O1+T12+S12N85+AT10 UPPER WING (RB1U33)

ALPHAO(5) = -8.200 BETAO (10) = 10.090

SECTION (1)UPPER WING DEPENDENT VARIABLE CP

X/CW \ Y/BW	.2990	.3640	.4270	.5340	.6730	.7800	.8870
.000	-.3573	-.0764	.0647	.1937	.1600	.0542	.1002
.020				.3547	.3274	.3302	.3542
.025			.1923				
.040		-.0319					
.045			.1903				
.050	-.1980			.2677	.2580	.2393	.2676
.080				.1776			
.085			.1442				
.086		.0467					
.094	-.1316						
.150				.0306	.0300	.0349	.0701
.163		.0000					
.177			.0577				
.193		.1181					
.229	-.0404						
.250				-.0907	-.1150	-.1062	-.0900
.274			-.0341				
.339		-.0735					
.362	.0874						
.400				-.1470	-.1503		-.2105
.402			-.1829				
.497	.0000						
.550				.0344	.0136		
.563			.0000				
.600							-.1290
.650						-.0551	
.700	.0415				-.1455		
.725				-.0007			
.750						-.0192	-.1251
.760			-.0247				
.775				.0014	.0264		
.808			-.0297				
.834	-.0083						
.850				-.0127	-.0111	-.0028	
.857			-.0573				
.865	.0023						
.900	-.0433			-.0335			.0278
.905			-.0435		-.0069		
.950				-.0220		.0212	
.953			-.0257				
.965	-.0754						

ARC11-716 IA14 O1+T12+S12N25+AT10 UPPER WING (RB1U33)

ALPHAO(4) = -4.200 BETAO (1) = -9.980

SECTION (1)UPPER WING DEPENDENT VARIABLE CP

Y/BW	.2990	.3640	.4270	.5340	.6730	.7800	.8870
X/CW							
.000	.0322	-.0299	.4156	.7234	.6638	.5993	.6342
.020				.5815	.5556	.5527	.5697
.025			.4164				
.040		.1136					
.045			.3289				
.050	.0092			.3435	.3359	.3418	.3288
.080				.1558			
.085			.1936				
.086		.1501					
.094	-.0182						
.150				-.0848	-.0588	-.0065	.0264
.163		.0000					
.177			.0039				
.193		.1184					
.229	.0229						
.250				-.2457	-.2315	-.2115	-.2040
.274			-.1416				
.339		-.0975					
.362	.1212						
.400				-.3727	-.3948		-.4244
.402			-.3077				
.497	.0000						
.550				-.4132	-.4422		
.565			.0000				
.600							-.4233
.650						-.4599	
.700	-.2294				-.1656		
.725				-.1231			
.750						-.4905	-.4347
.760			-.0356				
.775				-.0048	-.2783		
.800			.1256				
.834	.0644						
.850				.0517	-.2063	-.2754	
.857			.1214				
.865	.1725						
.900	.1622			.0760			-.3089
.905			.1309		.0277		
.950				.0954		-.1315	
.953			.1150				
.965	.0905						

ARC11-716 IA14 O1+T12+312N25+AT10 UPPER WING (RB1U33)

ALPHAO(4) = -4.230 BETAO (2) = -7.990

SECTION (1)UPPER WING DEPENDENT VARIABLE CP

Y/BW	.2990	.3640	.4270	.5340	.6730	.7800	.8870
X/CW							
.000	.0054	-.0596	.3631	.6842	.6279	.5598	.5964
.020				.5601	.5319	.5281	.5439
.025			.3742				
.040		.0686					
.045			.2999				
.050	-.0477			.3294	.3204	.3207	.3069
.080				.1494			
.085			.1763				
.086		.1258					
.094	-.0519						
.150				-.0090	-.0675	-.0196	.0268
.165		.0000					
.177			-.0060				
.193		.0947					
.229	-.0084						
.250				-.2515	-.2380	-.2197	-.2118
.274			-.1454				
.339		-.1080					
.362	.0815						
.400				-.3799	-.3986		-.4269
.402			-.3107				
.497	.0000						
.550				-.4261	-.4421		
.565			.0000				
.600							-.4395
.650						-.4750	
.700	-.2260				-.1627		
.725				-.1313			
.750						-.4803	-.4487
.760			-.0333				
.775				-.0154	-.2617		
.800			.1274				
.834	.0583						
.850				.0536	-.1521	-.2407	
.857			.1200				
.865	.1560						
.900	.1401			.0765			-.3105
.935			.1215		.0394		
.950				.0948		-.1375	
.953			.1147				
.965	.0962						

ARC11-716 IA14 O1+T12+S12N25+AT10 UPPER WING (RB1U33)

ALPHAO(4) = -4.180 BETAO (3) = -5.370

SECTION (1)UPPER WING DEPENDENT VARIABLE CP

Y/BW	.2990	.3640	.4270	.5340	.6730	.7800	.8870
X/CW							
.000	-.0353	-.0962	.3475	.6402	.5836	.5137	.5540
.020				.5388	.5059	.4992	.5139
.025			.3591				
.040		.0119					
.045			.2820				
.050	-.0838			.3155	.3026	.2989	.2861
.080				.1395			
.085			.1616				
.086		.0959					
.094	-.0834						
.150				-.0886	-.0707	-.0314	.0111
.163		.0000					
.177			-.0134				
.193		.0874					
.229	-.0379						
.250				-.2543	-.2407	-.2263	-.2213
.274			-.1470				
.339		-.1158					
.362	.0642						
.400				-.3820	-.3964		-.4340
.402			-.3148				
.497	.0000						
.550				-.4121	-.4323		
.565			.0000				
.600							-.4520
.650						-.4948	
.700	-.1690				-.1554		
.725				-.1123			
.750						-.4597	-.4426
.760			-.0373				
.779				.0230	-.1493		
.808			.1172				
.834	.0477						
.850				.0645	-.0528	-.2018	
.857			.0928				
.865	.1339						
.900	.1224			.0670			-.2501
.905			.0680		.0604		
.950				.0795		-.1358	
.953			.0841				
.965	.0792						

ARC11-716 IA14 O1+T12+S12N25+AT10 UPPER WING (RB1U33)

ALPHAO(4) = -4.170 BETAO (4) = -3.950

SECTION (1)UPPER WING DEPENDENT VARIABLE CP

Y/BW	.2990	.3640	.4270	.5340	.6730	.7800	.8870
X/CW							
.000	-.0757	-.1413	.3125	.5914	.5409	.4670	.5047
.020				.5151	.4815	.4741	.4852
.025			.3386				
.040		-.0146					
.045			.2607				
.050	-.1103			.3001	.2892	.2850	.2719
.080				.1292			
.085			.1458				
.086		.0703					
.094	-.1162						
.150				-.0940	-.0766	-.0351	-.0026
.163		.0000					
.177			-.0183				
.193		.0735					
.229	-.0513						
.250				-.2298	-.2333	-.2263	-.2242
.274			-.1394				
.339		-.1130					
.362	.0365						
.400				-.3462	-.3893		-.4298
.402			-.3060				
.497	.0000						
.550				-.3654	-.4181		
.565			.0000				
.600							-.4550
.650						-.4851	
.700	-.0923				-.1404		
.725				-.0682			
.750						-.4053	-.4390
.760			-.0293				
.775				.0582	-.0990		
.808			.0921				
.834	.0330						
.850				.0680	-.0222	-.1790	
.857			.0680				
.865	.1086						
.900	.0920			.0582			-.1996
.905			.0782		.0750		
.950				.0670		-.1391	
.953			.0653				
.965	.0562						

ARC11-716 IA14 O1+T12+S12N25+AT10 UPPER WING (RB1U33)

ALPHAO(4) = -4.150 BETAO (5) = -2.020

SECTION (1)UPPER WING DEPENDENT VARIABLE CP

Y/BW	.2990	.3640	.4270	.5340	.6730	.7800	.8870
X/CW							
.000	-.1183	-.1408	.3098	.5519	.4880	.4189	.4571
.020				.4893	.4526	.4518	.4613
.025			.3092				
.040		-.0372					
.045			.2450				
.050	-.1359			.2065	.2746	.2709	.2567
.080				.1292			
.085			.1357				
.086		.0352					
.094	-.1244						
.150				-.0730	-.0691	-.0303	-.0043
.163		.0000					
.177			-.0014				
.193		.0725					
.229	-.0646						
.250				-.2295	-.2127	-.2206	-.2224
.274			-.1147				
.339		-.0935					
.362	.0248						
.400				-.3492	-.3619		-.4199
.402			-.2799				
.497	.0000						
.550				-.3610	-.4006		
.565			.0000				
.600							-.4482
.650						-.4601	
.700	-.0463				-.1335		
.725				-.0580			
.750						-.3286	-.4234
.760			-.0188				
.775				.0498	-.0443		
.808			.0646				
.834	.0188						
.850				.0405	.0222	-.1805	
.857			.0401				
.865	.0872						
.900	.0675			.0216			-.1492
.905			.0529		.0789		
.950				.0301		-.0319	
.953			.0445				
.965	.0327						

ARC11-716 IA14 O1+T12+S12N25+AT10 UPPER WING (RB1U33)

ALPHAO(4) = -4.000 BETAO (6) = -.010

SECTION (1)UPPER WING DEPENDENT VARIABLE CP

Y/BW	.2990	.3640	.4270	.5340	.6730	.7800	.8870
X/CW							
.000	-.1481	-.1230	.3188	.5174	.4367	.3673	.4070
.020				.4513	.4177	.4197	.4318
.025			.3056				
.040		-.0549					
.045			.2382				
.050	-.1699			.2607	.2544	.2498	.2376
.060				.1201			
.065			.1339				
.086		.0254					
.094	-.1434						
.150				-.0723	-.0710	-.0345	-.0114
.163		.0000					
.177			.0156				
.193		.0856					
.229	-.0788						
.250				-.2104	-.2024	-.2073	-.2200
.274			-.0966				
.339		-.0794					
.362	.0387						
.400				-.3353	-.3471		-.4129
.402			-.2623				
.497	.0000						
.550				-.3329	-.3861		
.565			.0000				
.600							-.4362
.650						-.4442	
.700	-.0015				-.1308		
.725				-.0264			
.750						-.2594	-.3846
.760			-.0130				
.775				.0368	.0008		
.808			.0434				
.834	.0072						
.850				.0213	.0328	-.0892	
.857			.0130				
.865	.0682						
.900	.0477			-.0029			-.1239
.905			.0282		.0623		
.950				.0053		.1299	
.953			.0272				
.965	.0101						

ARC11-716 IA14 01+T12+S12N25+AT10 UPPER WING (RB1U33)

ALPHAO(4) = -4.210 BETAO (7) = 2.110

SECTION (1)UPPER WING DEPENDENT VARIABLE CP

Y/BW	.2990	.3640	.4270	.5340	.6730	.7800	.8870
X/CW							
.000	-.1839	-.0876	.3184	.4635	.3806	.3091	.3538
.020				.4216	.3830	.3929	.3982
.025			.2914				
.040		-.0172					
.045			.2226				
.050	-.2119			.2417	.2368	.2314	.2188
.080				.1126			
.085			.1221				
.086		.0586					
.094	-.1521						
.150				-.0765	-.0679	-.0591	-.0185
.163		.0000					
.177			.0098				
.193		.0980					
.229	-.0881						
.250				-.2052	-.1966	-.1992	-.2218
.274			-.0976				
.339		-.0813					
.362	.0682						
.400				-.3269	-.3342		-.4181
.402			-.2559				
.497	.0000						
.550				-.2574	-.3764		
.565			.0000				
.600							-.4409
.650						-.4358	
.700	.0191				-.1356		
.725				-.0194			
.750						-.1686	-.2958
.760			-.0193				
.775				.0145	.0147		
.808			.0205				
.834	-.0055						
.850				-.0030	.0226	.0107	
.857			-.0110				
.865	.0439						
.900	.0286			-.0303			-.1040
.905			.0035		.0369		
.950				-.0224		.1109	
.953			.0051				
.965	-.0132						

ARC11-716 IA14 O1+T12+S12N25+AT10 UPPER WING (RB1U33)

ALPHAO(4) = -4.200 BETAO (8) = 4.090

SECTION (1)UPPER WING DEPENDENT VARIABLE CP

Y/BW	.2990	.3640	.4270	.5340	.6730	.7800	.8870
X/CW							
.000	-.2427	-.0701	.2327	.4371	.3320	.2571	.3380
.020				.3974	.3478	.3546	.4022
.025			.2329				
.040		.0036					
.045			.1986				
.050	-.2395			.2298	.2145	.2063	.2326
.060				.1068			
.065			.1013				
.086		.0614					
.094	-.1534						
.150				-.0718	-.0710	-.0489	-.0030
.163		.0000					
.177			.0059				
.193		.0902					
.229	-.0677						
.250				-.1784	-.1957	-.2005	-.2053
.274			-.0929				
.339		-.0820					
.362	.0776						
.400				-.2943	-.3272		-.3956
.402			-.2460				
.497	.0000						
.550				-.1377	-.3534		
.565			.0000				
.600							-.4225
.650						-.3447	
.700	.0096				-.1340		
.725				-.0055			
.750						-.0367	-.2061
.760			-.0307				
.775				.0418	.0384		
.800			.0046				
.834	-.0179						
.850				.0142	.0294	.0562	
.857			-.0155				
.865	.0157						
.900	.0086			-.0129			.0185
.905			.0067		.0416		
.950				-.0063		.1339	
.953			.0096				
.965	-.0192						

ARC11-716 IA14 O1+T12+S12N25+AT10 UPPER WING (RB1U33)

ALPHAO(4) = -4.210 BETAO (9) = 6.060

SECTION (1)UPPER WING DEPENDENT VARIABLE CP

X/CW \ Y/BW	.2990	.3640	.4270	.5340	.6730	.7800	.8870
.000	-.3154	-.0727	.1555	.3899	.3556	.2329	.2643
.020				.3674	.3585	.3459	.3480
.025			.1576				
.040		-.0126					
.045			.1408				
.050	-.2656			.2319	.2275	.2044	.1954
.080				.1219			
.085			.1007				
.086		.0460					
.094	-.1555						
.150				-.0276	-.0487	-.0297	-.0148
.163		.0000					
.177			.0038				
.193		.0819					
.229	-.0465						
.250				-.1519	-.1771	-.1859	-.2109
.274			-.0681				
.339		-.0808					
.362	.0677						
.400				-.2563	-.2978		-.3940
.402			-.1978				
.497	.0000						
.550				-.0202	-.0877		
.565			.0000				
.600							-.3924
.650						-.1140	
.700	.0672				-.1357		
.725				-.0279			
.750						-.0460	-.0648
.760			-.0522				
.775				-.0004	-.0138		
.808			-.0070				
.834	-.0179						
.850				-.0191	-.0250	-.0055	
.857			-.0355				
.865	.0135						
.900	-.0001			-.0378			.1193
.905			-.0131		-.0111		
.950				-.0244		.0748	
.953			-.0120				
.965	-.0335						

ARC11-716 IA14 O1+T12+S12N25+AT10 UPPER WING (RB1U33)

ALPHAO(4) = -4.200 BETAO (10) = 8.080

SECTION (1)UPPER WING DEPENDENT VARIABLE CP

Y/BW	.2990	.3640	.4270	.5340	.6730	.7800	.8870
X/CW							
.000	-.3758	-.0634	.1353	.3004	.2806	.1885	.2117
.020				.3138	.3276	.3286	.3223
.025			.1677				
.040		.0125					
.045			.1569				
.050	-.2655			.2053	.2084	.2059	.1837
.080				.1055			
.085			.1231				
.086		.0862					
.094	-.1625						
.150				-.0313	-.0418	-.0222	-.0153
.163		.0000					
.177			.0133				
.193		.1023					
.229	-.0322						
.250				-.1513	-.1760	-.1794	-.2107
.274			-.0732				
.339		-.0734					
.362	.1035						
.400				-.2372	-.2795		-.3049
.402			-.2073				
.497	.0000						
.550				-.0195	-.0810		
.565			.0000				
.600							-.3533
.650						-.0955	
.700	.0327				-.1389		
.725				-.0383			
.750						-.0477	-.0768
.760			-.0517				
.775				.0001	-.0141		
.800			-.0158				
.834	-.0092						
.850				-.0309	-.0266	-.0270	
.857			-.0538				
.865	[illegible]						
.900	[illegible]			-.0447			.0712
.905			-.0340		-.0237		
.950				-.0354		.0367	
.953			-.0300				
.965	-.0315						

ARC11-716 IA14 O1+T12+S12N25+AT10 UPPER WING (RB1U33)

ALPHAO(4) = -4.160 BETAO (11) = 10.090

SECTION (1)UPPER WING DEPENDENT VARIABLE CP

X/CW \ Y/BW	.2995	.3640	.4270	.5340	.6730	.7800	.8870
.000	-.3884	-.0793	.0872	.2240	.2413	.1391	.1860
.020				.2602	.2993	.2963	.2849
.025			.1325				
.040		-.0426					
.045			.1325				
.050	-.2430			.1749	.1929	.1768	.1548
.080				.0959			
.085			.1130				
.086		.0423					
.094	-.1473						
.150				-.0297	-.0442	-.0386	-.0145
.153		.0000					
.177			.0133				
.193		.0858					
.229	-.0351						
.250				-.1425	-.1755	-.1656	-.1920
.274			-.0763				
.339		-.0975					
.362	.0751						
.400				-.2202	-.2584		-.3498
.402			-.2132				
.497	.0000						
.550				-.0474	-.1204		
.565			.0000				
.600							-.2748
.650						-.0692	
.700	-.0155				-.1505		
.725				-.0493			
.750						-.0437	-.0874
.760			-.0569				
.775				-.0205	-.0009		
.808			-.0384				
.834	-.0213						
.850				-.0408	-.0199	.0046	
.857			-.0720				
.869	-.0186						
.900	-.0571			-.0567			.0841
.905			-.0741		-.0132		
.950				-.0466		.0401	
.953			-.0693				
.965	-.1058						

ARC11-716 IA14 O1+T12+S12NBC+AT10 UPPER WING (RB1U33)

ALPHAO(5) = -2.870 BETAO (1) = -10.040

SECTION (1)UPPER WING DEPENDENT VARIABLE CP

Y/SW	.2990	.3640	.4270	.5340	.6730	.7800	.8870
X/CW							
.000	.0390	-.0144	.4742	.7507	.7055	.6419	.6701
.020				.5305	.5217	.5086	.5276
.025			.4037				
.040		.0942					
.045			.3020				
.050	.0149			.2880	.2848	.2828	.2721
.080				.0988			
.085			.1549				
.086		.1277					
.094	-.0258						
.150				-.1224	-.1260	-.0621	-.0190
.163		.0000					
.177			-.0373				
.193		.0944					
.229	-.0009						
.250				-.2941	-.2791	-.2568	-.2426
.274			-.1680				
.339		-.1181					
.362	.0951						
.400				-.4029	-.4349		-.4521
.402			-.3252				
.497	.0000						
.550				-.4574	-.4814		
.565			.0000				
.600							-.4521
.650						-.4840	
.700	-.2542				-.1762		
.725				-.1568			
.750						-.5265	-.4392
.760			-.0578				
.775				-.0579	-.3467		
.800			.0942				
.834	.0480						
.850				-.0012	-.2083	-.3494	
.857			.1027				
.865	.1571						
.900	.1524			.0275			-.3395
.905			.1148		-.1196		
.950				.0532		-.1877	
.953			.0991				
.965	.0787						

ARC11-716 IA14 O1+T12+S12N25+AT10 UPPER WING (RB1U33)

ALPHAO(5) = -2.870 BETAO (2) = -8.030

SECTION (1)UPPER WING DEPENDENT VARIABLE CP

Y/BW	.2990	.3640	.4270	.5340	.6730	.7800	.8870
X/CW							
.000	.0096	-.0598	.4232	.7166	.6605	.5968	.6276
.020				.5137	.4932	.4807	.4986
.025			.3714				
.040		.0612					
.045			.2732				
.050	-.0373			.2734	.2648	.2615	.2519
.080				.0845			
.085			.1418				
.086		.1036					
.094	-.0641						
.150				-.1407	-.1319	-.0744	-.0302
.163		.0000					
.177			-.0515				
.193		.0760					
.229	-.0247						
.250				-.2964	-.2834	-.2633	-.2511
.274			-.1837				
.339		-.1352					
.362	.0683						
.400				-.4057	-.4368		-.4587
.402			-.3343				
.497	.0000						
.550				-.4587	-.4826		
.565			.0000				
.600							-.4666
.650						-.4941	
.700	-.2642				-.1719		
.725				-.1564			
.750						-.5252	-.4485
.760			-.0650				
.775				-.0743	-.3053		
.808			.0917				
.834	.0384						
.850				-.0045	-.2387	-.2944	
.857			.0947				
.865	.1400						
.900	.1326			.0340			-.3421
.905			.1036		-.0768		
.950				.0630		-.1790	
.953			.0855				
.965	.0702						

DATE 10 JAN 75 TABULATED PRESSURE DATA - IA14A - VOL. 6

ARC11-716 IA14 O1+T12+S12N25+AT10 UPPER WING (RB1U33)

ALPHAO(5) = -2.870 BETAO (3) = -5.960

SECTION (1)UPPER WING DEPENDENT VARIABLE CP

Y/BW	.2990	.3640	.4270	.5340	.6730	.7800	.8870
X/CW							
.000	-.0299	-.0924	.3895	.6783	.6189	.5515	.5852
.020				.4963	.4751	.4588	.4714
.025			.3491				
.040		.0178					
.045			.2492				
.050	-.0796			.2640	.2574	.2471	.2357
.080				.0861			
.085			.1230				
.086		.0671					
.094	-.0956						
.150				-.1350	-.1278	-.0782	-.0415
.163		.0000					
.177			-.0505				
.193		.0673					
.229	-.0530						
.250				-.2729	-.2834	-.2687	-.2589
.274			-.1820				
.339		-.1385					
.362	.0566						
.400				-.3806	-.4337		-.4609
.402			-.3400				
.497	.0000						
.550				-.4285	-.4734		
.565			.0000				
.600							-.4675
.650						-.5076	
.700	-.2426				-.1653		
.725				-.1360			
.750						-.5137	-.4528
.760			-.0624				
.775				-.0336	-.2695		
.808			.0932				
.834	.0314						
.850				.0364	-.1779	-.2472	
.857			.0775				
.865	.1212						
.900	.1070			.0545			-.3120
.905			.0830		-.0108		
.950				.0720		-.1578	
.953			.0528				
.965	.0485						

DATE 10 JAN 75 TABULATED PRESSURE DATA - IA14A - VOL. 6 (RB1U33)

ARC11-716 IA14 O1+T12+S12N25+AT10 UPPER WING

ALPHAO(5) = -2.860 BETAO (4) = -3.920

SECTION (1)UPPER WING DEPENDENT VARIABLE CP

Y/BW	.2990	.3640	.4270	.5340	.6730	.7800	.8870
X/CW							
.000	-.0703	-.1179	.3705	.6344	.5752	.5030	.5391
.020				.4785	.4500	.4342	.4445
.025			.3222				
.040		-.0012					
.045			.2235				
.050	-.1078			.2522	.2389	.2292	.2192
.080				.0844			
.085			.1057				
.086		.0685					
.094	-.1250						
.150				-.1370	-.1253	-.0812	-.0464
.163		.0000					
.177			-.0522				
.193		.0553					
.229	-.0656						
.250				-.2893	-.2784	-.2674	-.2618
.274			-.1741				
.339		-.1377					
.362	.0368						
.400				-.3965	-.4248		-.4606
.402			-.3326				
.497	.0000						
.550				-.4255	-.4507		
.565			.0000				
.600							-.4716
.650						-.5137	
.700	-.1754				-.1559		
.725				-.1303			
.750						-.4683	-.4509
.760			-.0556				
.775				-.0037	-.1674		
.800			.0846				
.834	.0856						
.850				.0379	-.0948	-.2140	
.857			.0579				
.865	.0992						
.900	.0832			.0346			-.2476
.905			.0616		.0281		
.950				.0404		-.1604	
.953			.0421				
.965	.0347						

ARC11-716 IA14 O4+T12+S12N25+AT10 UPPER WING (RB1U33)

ALPHAO(5) = -2.000 BETAO (5) = -2.000

SECTION (1)UPPER WING DEPENDENT VARIABLE CP

Y/BW	.2990	.3640	.4270	.5340	.6730	.7800	.8870
X/CW							
.000	-.1106	-.1041	.3395	.5904	.5238	.4589	.4923
.020				.4503	.4206	.4068	.4194
.025			.2965				
.040		-.0254					
.045			.2045				
.050	-.1379			.2331	.2209	.2145	.2054
.080				.0772			
.085			.0969				
.086		.0399					
.094	-.1467						
.150				-.1197	-.1187	-.0846	-.0495
.163		.0000					
.177			-.0421				
.193		.0515					
.229	-.0772						
.250				-.2522	-.2662	-.2601	-.2625
.274			-.1492				
.339		-.1203					
.362	.0238						
.400				-.3598	-.4058		-.4538
.402			-.3096				
.497	.0000						
.550				-.3740	-.4281		
.565			.0000				
.600							-.4728
.650						-.4987	
.700	-.1155				-.1448		
.725				-.0879			
.750						-.4058	-.4316
.760			-.0429				
.775				.0316	-.1158		
.808			.0579				
.834	.0077						
.850				.0401	-.0396	-.1964	
.857			.0290				
.865	.0721						
.900	.0535			.0228			-.1987
.905			.0371		.0549		
.950				.0252		-.1456	
.953			.0198				
.965	.0059						

ARC11-716 IA14 O1+T12+S12NC5+AT10 UPPER WING (RB1U33)

ALPHAO(5) = -2.850 BETAO (6) = .020

SECTION (1)UPPER WING DEPENDENT VARIABLE CP

Y/BW	.2990	.3640	.4270	.5340	.6730	.7800	.8870
X/CW							
.000	-.140.	-.1025	.3416	.5435	.4715	.4051	.4420
.020				.4105	.3877	.3801	.3946
.025			.2905				
.040		-.0439					
.045			.2027				
.050	-.1781			.2173	.2054	.2014	.1924
.080				.0699			
.085			.1021				
.086		.0396					
.094	-.1586						
.150				-.1154	-.1178	-.0878	-.0537
.163		.0000					
.177			-.0269				
.193		.0655					
.229	-.0896						
.250				-.2303	- 2522	-.2594	-.2611
.274			-.1348				
.339		-.1059					
.362	.0343						
.400				-.3339	-.3255		-.4501
.402			-.2941				
.497	.0000						
.550				-.3431	-.4162		
.565			.0000				
.600							-.4655
.650						-.4767	
.700	-.0607				-.1436		
.725				-.0487			
.750						-.3309	-.4106
.760			-.0304				
.775				.0387	-.0644		
.808			.0312				
.834	-.0086						
.850				.0308	- 0058	-.2071	
.857			.0025				
.865	.0479						
.900	.0324			.0049			-.1630
.905			.0140		.0499		
.950				.0070		-.0180	
.953			.0006				
.985	-.0163						

ARC11-716 IA14 O1+T1E-S12N25+AT10 UPPER WING (RB1U33)

ALPHAO(5) = -2.050 BETAO (7) = 2.020

SECTION (1)UPPER WING DEPENDENT VARIABLE CP

Y/BW	.2990	.3640	.4270	.5340	.6730	.7800	.8870
X/CW							
.000	-.1740	-.0759	.3322	.4947	.4195	.3545	.3962
.020				.3754	.3570	.3508	.3638
.025			.2609				
.040		-.0068					
.045			.1927				
.050	-.2217			.1960	.1845	.1833	.1716
.080				.0611			
.085			.0881				
.086		.0532					
.094	-.1690						
.150				-.1148	-.1174	-.0911	-.0635
.163		.0000					
.177			-.0257				
.193		.0783					
.229	-.0899						
.250				-.2505	-.2383	-.2561	-.2665
.274			-.1322				
.339		-.1066					
.362	.0636						
.400				-.3536	-.3710		-.4467
.402			-.2863				
.497	.0000						
.550				-.3467	-.4070		
.565			.0000				
.600							-.4606
.650						-.4683	
.700	-.0366				-.1425		
.725				-.0478			
.750						-.2837	-.3323
.760			-.0350				
.775				.0060	-.0301		
.808			.0096				
.834	-.0181						
.850				-.0103	.0062	-.1193	
.857			-.0239				
.865	.0300						
.900	.0161			-.0382			-.1521
.905			-.0144		.0334		
.950				-.0396		.1033	
.953			-.0200				
.965	-.0374						

DATE 10 JAN 75 TABULATED PRESSURE DATA - IA14A - VOL. 6

ARC11-716 IA14 O1+T12+S12N25+AT10 UPPER WING (RB1U33)

ALPHAO(5) = -2.770 BETAO (8) = 4.100

SECTION (1)UPPER WING DEPENDENT VARIABLE CP

Y/BW	.2990	.3640	.4270	.5340	.6730	.7800	.8870
X/CW							
.000	-.2498	-.0782	.2308	.4740	.3784	.3046	.3953
.020				.3558	.3236	.3120	.3647
.025			.2025				
.040		-.0015					
.045			.1566				
.050	-.2504			.1838	.1630	.1554	.1838
.080				.0521			
.085			.0770				
.086		.0485					
.094	-.1759						
.150				-.1135	-.1203	-.0988	-.0425
.163		.0000					
.177			-.0308				
.193		.0720					
.229	-.0674						
.250				-.2145	-.2339	-.2330	-.2428
.274			-.1222				
.339		-.1108					
.362	.0635						
.400				-.3247	-.3617		-.4240
.402			-.2705				
.497	.0000						
.550				-.2241	-.3793		
.565			.0000				
.600							-.4331
.650						-.4336	
.700	-.0314				-.1368		
.725				-.0162			
.750						-.1501	-.2588
.760			-.0539				
.775				.0258	.0273		
.808			-.0041				
.834	-.0343						
.850				.0104	.0249	.0352	
.857			-.0401				
.865	.0022						
.900	-.0118			-.0202			-.1054
.905			-.0163		.0389		
.950				-.0231		.1314	
.953			-.0181				
.965	-.0399						

ARC11-716 IA14 O1+T12+S12N25+AT10 UPPER WING (RB1U33)

ALPHAO(5) = -2.790 BETAO (9) = 6.120

SECTION (1)UPPER WING DEPENDENT VARIABLE CP

Y/BW	.2990	.3640	.4270	.5340	.6730	.7800	.8870
X/CW							
.000	-.3350	-.0888	.1502	.4172	.3920	.2771	.3104
.020				.3171	.3329	.3030	.3146
.025			.1265				
.040		-.0334					
.045			.1032				
.050	-.2807			.1853	.1727	.1511	.1458
.080				.0700			
.085			.0600				
.086		.0336					
.094	-.1734						
.150				-.0813	-.1063	-.0858	-.0655
.163		.0000					
.177			-.0403				
.193		.0565					
.229	-.0483						
.250				-.2172	-.2185	-.2301	-.2529
.274			-.0986				
.339		-.1074					
.362	.0540						
.400				-.3175	- 3434		-.4305
.402			-.2236				
.497	.0000						
.550				-.0906	-.1904		
.565			.0000				
.600							-.4316
.650						-.2099	
.700	.0327				-.1394		
.725				-.064(			
.750						-.0661	-.2176
.760			-.0777				
.775				-.0248	-.0208		
.808			-.0164				
.834	-.0325						
.850				-.0489	-.0248	.0027	
.857			-.0477				
.865	-.0026						
.900	-.0150			-.0654			.0970
.905			-.0306		-.0035		
.950				-.0618		.1050	
.953			-.0361				
.965	-.0475						

ARC11-716 IA14 O1+T12+S12N25+AT10 UPPER WING (RB1U33)

ALPHAO(5) = -2.790 BETAO (10) = 8.140

SECTION (1)UPPER WING DEPENDENT VARIABLE CP

Y/BW	.0990	.3640	.4270	.5340	.6730	.7800	.8870
X/CW							
.000	-.4001	-.0414	.1297	.3393	.3259	.2398	.2691
.020				.2727	.3082	.2899	.2836
.025			.1297				
.040		-.0057					
.045			.1147				
.050	-.2988			.1512	.1651	.1538	.1300
.080				.0523			
.065			.0885				
.086		.0568					
.094	-.1763						
.150				-.0749	-.0979	-.0789	-.0661
.163		.0000					
.177			-.0138				
.193		.0822					
.229	-.0274						
.250				-.1943	-.2134	-.2206	-.2472
.274			-.0953				
.339		-.0977					
.362	.0836						
.400				-.2820	-.3204		-.4202
.402			-.2326				
.497	.0000						
.550				-.0872	-.1523		
.565			.0000				
.600							-.4231
.650						-.1932	
.700	-.0145				-.1464		
.725				-.0666			
.750						-.0762	-.1799
.760			-.0724				
.775				-.0177	-.0219		
.808			-.0223				
.834	-.0229						
.850				-.0435	-.0275	-.0223	
.857			-.0567				
.865	-.0087						
.900	-.0319			-.0596			.0835
.905			-.0448		-.0208		
.950				-.0588		.0531	
.955			-.0458				
.965	-.0602						

ARC11-716 IA14 O1+T12+S12N25+AT10 UPPER WING (RB1U33)

ALPHAO(5) = -2.770 BETAO (11) = 10.100

SECTION (1)UPPER WING DEPENDENT VARIABLE CP

Y/BW	.2990	.3640	.4270	.5340	.6730	.7800	.8870
X/CW							
.000	-.4224	-.0806	.0943	.2344	.2825	.1966	.2227
.020				.1987	.2751	.2643	.2456
.025			.0943				
.040		-.0532					
.045			.0887				
.050	-.2704			.1132	.1449	.1353	.1147
.080				.0481			
.085			.0698				
.086		.0223					
.094	-.1581						
.150				-.0727	-.0963	-.0884	-.0691
.163		.0000					
.177			-.0172				
.193		.0700					
.229	-.0404						
.250				-.1823	-.2169	-.2291	-.2453
.274			-.1028				
.339		-.1116					
.362	.0619						
.400				-.2533	-.3044		-.4011
.402			-.2392				
.497	.0000						
.550				-.1061	-.1758		
.565			.0000				
.600							-.3775
.650						-.1614	
.700	-.0436				-.1568		
.725				-.0839			
.750						-.0554	-.0973
.760			-.0745				
.775				-.0373	-.0208		
.808			-.0461				
.834	-.0324						
.850				-.0685	.0242	-.0137	
.857			-.0867				
.865	-.0269						
.900	-.0602			-.0714			.0969
.905			-.0835		-.0151		
.950				-.0679		.0633	
.955			-.0817				
.965	-.1137						

ARC11-716 IA14 O1+T12+S12N25+AT10 UPPER WING (RB1U33)

ALPHAO(6) = -.760 BETAO (1) = -10.520

SECTION (1)UPPER WING DEPENDENT VARIABLE CP

Y/BW	.2990	.3640	.4270	.5340	.6730	.7800	.8870
X/CW							
.000	.0330	.0825	.5636	.7958	.7338	.6915	.7479
.020				.4614	.4422	.4236	.4474
.025			.3501				
.040		.0852					
.045			.2706				
.050	.0241			.2132	.1973	.1922	.1834
.060				.0188			
.085			.0971				
.086		.1244					
.094	-.0123						
.150				-.2104	-.1977	-.1257	-.0911
.163		.0000					
.177			-.1093				
.193		.0611					
.229	-.0030						
.250				-.3258	-.3551	-.3253	-.2938
.274			-.2268				
.339		-.1594					
.362	.0938						
.400				-.4362	-.4960		-.4882
.402			-.3643				
.497	.0000						
.550				-.4725	-.5355		
.569			.0000				
.600							-.4984
.650						-.5202	
.700	-.2093				-.1931		
.725				-.2125			
.750						-.5264	-.4850
.760			-.1069				
.775				-.0934	-.4392		
.808			.0161				
.834	.0146						
.850				-.0222	-.2662	-.4397	
.857			.0575				
.865	.1317						
.900	.1330			.0214			-.4045
.905			.0880		-.2039		
.950				.0385		-.2632	
.953			.0846				
.965	.0585						

ARC11-716 IA14 O1+T12+S12N25+AT10 UPPER WING (RB1U33)

ALPHAO(6) = -.730 BETAO (2) = -8.420

SECTION (1)UPPER WING DEPENDENT VARIABLE CP

Y/BW	.2990	.3640	.4270	.5340	.6730	.7800	.8870
X/CW							
.000	.0222	.0289	.4988	.7687	.7095	.6565	.6989
.020				.4402	.4278	.4047	.4348
.025			.2987				
.040		.0549					
.045			.2215				
.050	-.0156			.1972	.1822	.1709	.1768
.080				.0094			
.085			.0678				
.086		.0869					
.094	-.0619						
.150				-.2184	-.2084	-.1426	-.1020
.163		.0000					
.177			-.1252				
.193		.0180					
.229	-.0449						
.250				-.3371	-.3627	-.3382	-.3036
.274			-.2385				
.339		-.1760					
.362	.0528						
.400				-.4430	-.5036		-.4950
.402			-.3793				
.497	.0000						
.550				-.4816	-.5401		
.565			.0000				
.600							-.5142
.650						-.5300	
.700	-.3064				-.1915		
.725				-.1837			
.750						-.5460	-.4939
.760			-.1132				
.775				-.1103	-.4207		
.808			.0187				
.834	.0055						
.850				-.0541	-.2768	-.3913	
.857			.0589				
.865	.1196						
.900	.1156			-.0168			-.4109
.905			.0849		-.2388		
.950				.0098		-.2608	
.953			.0717				
.965	.0435						

ARC11-716 IA14 O1+T12+S12N25+ATIU UPPER WING (RB1U33)

ALPHAO(6) = -.730 BETAO (3) = -6.290

SECTION (1)UPPER WING DEPENDENT VARIABLE CP

Y/BW	.2990	.3640	.4270	.5340	.6730	.7800	.8870
x/CW							
.000	-.0104	-.0455	.4634	.7300	.6691	.6135	.6437
.020				.4253	.4121	.3839	.3984
.025			.2728				
.040		.0322					
.045			.1987				
.050	-.0528			.1875	.1724	.1632	.1499
.080				.0065			
.085			.0615				
.086		.0645					
.094	-.0945						
.150				-.2182	-.2115	-.1488	-.1175
.163		.0000					
.177			-.1248				
.193		.0103					
.229	-.0600						
.250				-.3314	-.3575	-.3431	-.3135
.274			-.2406				
.339		-.1793					
.362	.0340						
.400				-.4319	-.4983		-.4979
.402			-.3774				
.497	.0000						
.550				-.4780	-.5356		
.565			.0000				
.600							-.5255
.650						-.5311	
.700	-.3054				-.1896		
.725				-.1782			
.750						-.5431	-.4961
.760			-.1083				
.775				-.1297	-.3604		
.808			.0287				
.834	.0010						
.850				-.0699	-.2758	-.3305	
.857			.0489				
.865	.1020						
.900	.0896			-.0225			-.4060
.909			.0629		-.1936		
.950				.0280		-.2445	
.953			.0424				
.965	.0168						

ARC11-716 IA14 O1+T12+S12N25+AT10 UPPER WING (RB1U33)

ALPHAO(6) = -.710 BETAO (4) = -4.140

SECTION (1)UPPER WING DEPENDENT VARIABLE CP

Y/SW	.2990	.3640	.4270	.5340	.6730	.7800	.8870
X/CW							
.000	-.0506	-.0679	.4128	.6883	.6329	.3696	.5978
.020				.4078	.3940	.3599	.3715
.025			.2461				
.040		.0078					
.045			.1739				
.050	-.0921			.1817	.1618	.1505	.1376
.080				.0017			
.085			.0516				
.086		.0516					
.094	-.1227						
.130				-.2116	-.2134	-.1582	-.1247
.163		.0000					
.177			-.1182				
.193		.0067					
.229	-.0803						
.230				-.3445	-.3508	-.3432	-.3225
.274			-.2327				
.339		-.1798					
.362	.0256						
.400			*	-.4496	-.4858		-.5041
.402			-.3749				
.497	.0000						
.550				-.4974	-.5264		
.565			.0000				
.600							-.5290
.650						-.5349	
.700	-.2790				-.1778		
.725				-.1947			
.750						-.5301	-.4876
.760			-.0914				
.775				-.1269	-.3128		
.808			.0442				
.834	.0006						
.850				-.0433	-.2222	-.2916	
.857			.0417				
.865	.0850						
.900	.0703			-.0066			-.3669
.905			.0448		-.0864		
.950				.0191		-.2268	
.953			.0188				
.965	-.0031						

ARC11-716 IA14 O1+T12+S12N25+AT10 UPPER WING (RB1U33)

ALPHAO(6) = -.700 BETAO (5) = -2.080

SECTION (1)UPPER WING DEPENDENT VARIABLE CP

X/CW \ Y/BW	.2990	.3640	.4270	.5340	.6730	.7800	.8870
.000	-.0934	-.0652	.3813	.6480	.5824	.5292	.5541
.020				.3868	.3694	.3397	.3419
.025			.2294				
.040		-.0124					
.045			.1600				
.050	-.1323			.1706	.1477	.1343	.1228
.080				-.0007			
.085			.0425				
.086		.0459					
.094	-.1506						
.150				-.2068	-.2160	-.1622	-.1304
.163		.0000					
.177			-.1099				
.193		-.0034					
.229	-.0763						
.250				-.3135	-.3440	-.3276	-.3231
.274			-.2146				
.339		-.1665					
.362	.0098						
.400				-.3964	-.4700		-.5030
.402			-.3452				
.497	.0000						
.550				-.4267	-.4938		
.565			.0000				
.600							-.5032
.650						-.5324	
.700	-.2320				-.1674		
.725				-.1511			
.750						-.5084	-.4606
.760			-.0782				
.775				-.0477	-.2251		
.808			.0469				
.834	-.0009						
.850				.0113	-.1522	-.2430	
.857			.0248				
.865	.0671						
.900	.0482			.0139			-.2788
.905			.0243		-.0224		
.950				.0168		-.1971	
.953			-.0015				
.965	-.0211						

ARC11-716 IA14 O!+T12+S12N25+AT10 UPPER WING (RB1U33)

ALPHAO(6) = -.700 BETAO (6) = .030

SECTION (1)UPPER WING DEPENDENT VARIABLE CP

Y/BW	.2990	.3640	.4270	.5340	.6730	.7800	.8870
X/CW							
.000	-.1181	-.0921	.3779	.5937	.5232	.4771	.5063
.020				.3429	.3298	.3055	.3174
.025			.2166				
.040		-.0300					
.045			.1588				
.050	-.1783			.1384	.1212	.1132	.1029
.080				-.0226			
.085			.0409				
.086		.0385					
.094	-.1693						
.150				-.1981	-.2156	-.1710	-.1397
.163		.0000					
.177			-.0934				
.193		.0143					
.229	-.0865						
.250				-.2952	-.3301	-.3306	-.3270
.274			-.1864				
.339		-.1454					
.362	.0198						
.400				-.3821	-.4497		-.5040
.402			-.3346				
.497	.0000						
.550				-.4007	-.4641		
.565			.0000				
.600							-.4957
.650						-.5319	
.700	-.1661				-.1558		
.725				-.1248			
.750						-.4533	-.4417
.760			-.0704				
.775				-.0103	-.1724		
.808			.0206				
.834	-.0201						
.850				.0107	-.1006	-.2198	
.857			-.0112				
.865	.0334						
.900	.0161			-.0087			-.2460
.905			-.0067		.0141		
.950				-.0111		-.1744	
.953			-.0236				
.965	-.0428						

ARC11-716 IA14 O1+T12+S12N25+AT10 UPPER WING (RB1U33)

ALPHAO(6) = -.700 BETAO (7) = 2.160

SECTION (1)UPPER WING DEPENDENT VARIABLE CP

Y/BW	.2990	.3640	.4270	.5340	.6730	.7800	.8870
X/CW							
.000	-.1805	-.0968	.3389	.5371	.4716	.4220	.4567
.020				.3069	.3008	.2768	.2861
.025			.1841				
.040		-.0033					
.045			.1367				
.050	-.2315			.1112	.1037	.0937	.0848
.080				-.0304			
.085			.0268				
.086		.0370					
.094	-.2034						
.150				-.1848	-.2010	-.1727	-.1498
.163		.0000					
.177			-.0856				
.193		.0309					
.229	-.0842						
.250				-.2781	-.3184	-.3282	-.3340
.274			-.1801				
.339		-.1439					
.362	.0437						
.400				-.3738	-.4356		-.5070
.402			-.3300				
.497	.0000						
.550				-.3815	-.4548		
.565			.0000				
.600							-.4997
.650						-.5239	
.700	-.1087				-.1534		
.725				-.0910			
.750						-.3740	-.3942
.765			-.0723				
.775				-.0044	-.1315		
.808			-.0084				
.834	-.0410						
.850				-.0079	-.0603	-.1196	
.857			-.0388				
.865	.0002						
.900	-.0107			-.0337			-.2215
.905			-.0337		.0253		
.950				-.0385		-.0794	
.953			-.0465				
.965	-.0688						

ARC11-716 IA14 O1+T12+S12N25+AT10 UPPER WING (RB1U33)

ALPHAO(6) = -.710 BETAO (8) = 4.270

SECTION (1)UPPER WING DEPENDENT VARIABLE CP

Y/BW	.2990	.3640	.4270	.5340	.6730	.7800	.8870
X/CW							
.000	-.2674	-.1219	.2219	.5177	.4229	.3964	.4522
.020				.2893	.2673	.2574	.2781
.025			.1268				
.040		-.0136					
.045			.0977				
.050	-.2637			.1064	.0787	.0983	.0834
.080				-.0255			
.085			.0187				
.086		.0321					
.094	-.2041						
.150				-.1333	-.2013	-.1539	-.1414
.163		.0000					
.177			-.0781				
.193		.0323					
.229	-.0560						
.250				-.2703	-.2981	-.3095	-.3232
.274			-.1671				
.339		-.1385					
.362	.0504						
.400				-.3582	-.4012		-.4940
.402			-.3059				
.497	.0000						
.550				-.3277	-.4245		
.555			.0000				
.600							-.4774
.650						-.4904	
.700	-.0810				-.1550		
.725				-.0425			
.750						-.2770	-.3208
.760			-.0731				
.775				.0175	-.0460		
.808			-.0009				
.834	-.0510						
.850				-.0013	-.0032	-.0977	
.857			-.0241				
.865	.0055						
.900	-.0034			-.0300			-.1574
.935			-.0159		.0406		
.950				-.0369		.1075	
.953			-.0217				
.965	-.0340						

DATE 10 JAN 75 TABULATED PRESSURE DATA - IA14A - VOL. 6

ARC11-716 IA14 O1\T12+S12N25+AT10 UPPER WING (RB1U33)

ALPHAO(6) = -.730 BETAO (9) = 6.350

SECTION (1)UPPER WING DEPENDENT VARIABLE CP

Y/SW	.2990	.3640	.4270	.5340	.6730	.7800	.8870
X/CW							
.000	-.3745	-.1216	.1349	.5084	.4012	.3369	.3736
.020				.2720	.2703	.2342	.2447
.025			.0729				
.040		-.0668					
.045			.0561				
.050	-.2952			.1043	.0826	.0682	.0598
.080				-.0237			
.085			.0317				
.086		-.0084					
.094	-.1916						
.150				-.1608	-.1900	-.1677	-.1466
.163		.0000					
.177			-.0584				
.193		.0305					
.229	-.0479						
.250				-.2954	-.2838	-.3113	-.3229
.274			-.1419				
.339		-.1146					
.362	.0391						
.400				-.3136	-.4027		-.4829
.402			-.2307				
.497	.0000						
.550				-.1536	-.3524		
.565			.0000				
.600							-.4654
.650						-.4354	
.700	-.0382				-.1590		
.725				-.0848			
.750						-.1814	-.2997
.760			-.1049				
.775				-.0255	-.0456		
.808			-.0423				
.834	-.0621						
.850				-.0429	-.0331	-.0075	
.857			-.0631				
.865	-.0310						
.900	-.0421			-.0601			-.1106
.925			-.0513		-.0007		
.950				-.0617		.0981	
.953			-.0576				
.965	-.0787						

ARC11-716 IA14 C1+T12+S12N25+AT10 UPPER WING (RB1U33)

ALPHAO(6) = -.730 BETAO (10) = 8.130

SECTION (1)UPPER WING DEPENDENT VARIABLE CP

Y/BW	.2990	.3640	.4270	.5340	.6730	.7800	.8870
X/CW							
.000	-.4504	-.0612	.1221	.3526	.3743	.3129	.3442
.020				.2133	.2587	.2258	.2180
.025			.0650				
.040		-.0152					
.045			.0703				
.050	-.3381			.0792	.0831	.0708	.0435
.080				-.0227			
.085			.0361				
.086		-.0050					
.094	-.2041						
.150				-.1438	-.1708	-.1622	-.1523
.163		.0000					
.177			-.0588				
.193		.0530					
.229	.0302						
.250				-.2594	-.2669	-.3011	-.3248
.274			-.1369				
.339		-.1259					
.362	.0375						
.400				-.3302	-.3883		-.4766
.402			-.2602				
.497	.0000						
.550				-.1362	-.3234		
.565			.0000				
.600							-.4698
.650						-.3576	
.700	-.0249				-.1660		
.725				-.1190			
.750						-.1633	-.3020
.760			-.1227				
.775				-.0565	-.0548		
.808			-.0451				
.834	-.0392						
.850				-.0745	-.0540	-.0402	
.857			-.0751				
.865	-.0354						
.900	-.0498			-.0882			-.0544
.905			-.0610		-.0226		
.950				-.0866		.0635	
.953			-.0793				
.965	-.0924						

ARC11-716 IA14 O1+T12+S12N25+AT10 UPPER WING (RB1U33)

ALPHAO(6) = -.750 BETAO (11) = 10.110

SECTION (1)UPPER WING DEPENDENT VARIABLE CP

Y/BW	.2990	.3640	.4270	.5340	.6730	.7800	.8870
X/CW							
.000	-.4820	-.0941	.0774	.2240	.3289	.2630	.2899
.020				.1386	.2280	.2042	.1898
.025			.0586				
.040		-.0558					
.045			.0410				
.050	-.3500			.0422	.0762	.0521	.0387
.080				-.0302			
.085			.0203				
.086		-.0245					
.094	-.1885						
.150				-.1253	-.1684	-.1650	-.1354
.163		.0000					
.177			-.0604				
.193		.0487					
.229	-.0302						
.250				-.2275	-.2676	-.2904	-.3017
.274			-.1376				
.339		-.1388					
.362	.0455						
.400				-.2906	-.3653		-.4542
.402			-.2570				
.497	.0000						
.550				-.1387	-.2420		
.565			.0000				
.600							-.4558
.650						-.2574	
.700	-.0669				-.1689		
.725				-.1189			
.750						-.1373	-.2429
.760			-.1010				
.775				-.0632	-.0516		
.800			-.0596				
.834	-.0591						
.850				-.0843	-.0381	-.0224	
.857			-.0985				
.865	-.0393						
.900	-.0777			-.0472			.0703
.905			-.0875		-.0238		
.950				-.0883		.0751	
.953			-.0859				
.965	-.1258						

ARC11-716 IA14 O1+T12+S12N25+AT10 UPPER WING (RB1U33)

ALPHAO(7) = 2.010 BETAO (1) = -10.080

SECTION (1)UPPER WING DEPENDENT VARIABLE CP

Y/BW	.2990	.3640	.4270	.5340	.6730	.7800	.8870
X/CW							
.000	.1546	.0573	.5697	.8142	.8031	.7851	.7989
.020				.3123	.3499	.3021	.2776
.025			.2473				
.040		.0497					
.045			.1534				
.050	.0177			.0747	.0770	.0757	.0220
.080				-.0993			
.085			-.0273				
.086		.1019					
.094	.0086						
.150				-.3229	-.2977	-.2387	-.2182
.163		.0000					
.177			-.1848				
.193		-.0252					
.229	-.0249						
.250				-.4317	-.4475	-.4180	-.3826
.274			-.2864				
.339		-.2150					
.362	.0476						
.400				-.5032	-.5736		-.5527
.402			-.4184				
.497	.0000						
.550				-.5218	-.6076		
.565			.0000				
.600							-.5524
.650						-.5917	
.700	-.3369				-.2022		
.725				-.3639			
.750						-.5959	-.5521
.760			-.1691				
.775				-.1976	-.5417		
.808			-.0867				
.834	-.0255						
.850				-.0985	-.3948	-.4716	
.857			-.0369				
.865	.0991						
.900	.1074			-.0200			-.4910
.905			.0210		-.3125		
.950				.0288		-.3344	
.953			.0413				
.965	.0211						

ARC11-716 IA14 O1+T12+S12N25+AT10 UPPER WING (RB1U33)

ALPHAO(7) = 2.000 BETAO (2) = -8.040

SECTION (1)UPPER WING DEPENDENT VARIABLE CP

X/CW \ Y/BW	.2990	.3640	.4270	.5340	.6730	.7800	.8870
.000	.0494	.0284	.5375	.7679	.7492	.7378	.7619
.020				.3204	.3252	.2802	.2556
.025			.2223				
.040		.0227					
.045			.1353				
.050	-.0106			.0821	.0644	.0636	.0093
.080				-.0934			
.085			-.0297				
.086		.0660					
.094	-.0370						
.150				-.3201	-.3001	-.2444	-.2282
.163		.0000					
.177			-.1958				
.193		-.0302					
.229	-.0593						
.250				-.4464	-.4465	-.4202	-.3893
.274			-.3087				
.339		-.2322					
.362	.0214						
.400				-.5333	-.5701		-.5556
.402			-.4266				
.497	.0000						
.550				-.5544	-.6046		
.565			.0000				
.600							-.5556
.650						-.5913	
.700	-.3526				-.2026		
.725				-.2933			
.750						-.5897	-.5553
.760			-.2010				
.775				-.2043	-.4987		
.808			-.0792				
.834	-.0250						
.850				-.0966	-.4078	-.4307	
.857			-.0127				
.865	.0976						
.900	.0965			-.0546			-.4942
.905			.0422		-.3407		
.950				-.0501		-.3207	
.953			.0409				
.965	.0110						

ARC11-716 IA14 O1+T12+S12N25+AT10 UPPER WING (RB1U33)

ALPHAO(7) = 2.050 BETAO (3) = -6.040

SECTION (1)UPPER WING DEPENDENT VARIABLE CP

Y/SW	.2990	.3640	.4270	.5340	.6730	.7800	.8870
X/CW							
.000	.0072	-.0161	.4948	.7616	.7075	.7005	.7284
.020				.3060	.3122	.2661	.2341
.025			.1988				
.040		-.0137					
.045			.1152				
.050	-.0514			.0696	.0569	.0904	-.0062
.080				-.1009			
.085			-.0468				
.086		.0385					
.094	-.0640						
.150				-.3236	-.3051	-.2506	-.2379
.163		.0000					
.177			-.1970				
.193		-.0494					
.229	-.0871						
.250				-.4347	-.4485	-.4248	-.3969
.274			-.3096				
.339		-.2345					
.362	.0032						
.400				-.5109	-.5709		-.5608
.402			-.4341				
.497	.0000						
.550				-.5364	-.6039		
.565			.0000				
.600							-.5554
.650						-.5937	
.700	-.3592				-.2038		
.725				-.2339			
.750						-.5527	-.5639
.760			-.2015				
.775				-.1869	-.4546		
.808			-.0602				
.834	-.0211						
.850				-.1267	-.3966	-.4003	
.857			.0024				
.865	.0873						
.900	.0776			-.0907			-.4951
.904			.0362		-.3254		
.950				-.0576		-.3192	
.953			.0234				
.965	-.0069						

ARC11-716 IA14 O1+T12+S12N25+AT10 UPPER WING (RB1U33)

ALPHAO(7) = 1.920 BETAO (4) = -3.990

SECTION (1)UPPER WING DEPENDENT VARIABLE CP

Y/BW	.2990	.3640	.4270	.5340	.6730	.7800	.8870
X/CW							
.000	-.0387	-.0472	.4378	.7305	.6729	.6360	.6904
.020				.3005	.2983	.2519	.2290
.025			.1831				
.040		-.0308					
.045			.1095				
.050	-.0924			.0716	.0483	.0441	-.0054
.080				-.1000			
.085			-.0478				
.086		.0275					
.094	-.1084						
.150				-.3136	-.3063	-.2497	-.2359
.163		.0000					
.177			-.1919				
.193		-.0507					
.229	-.0946						
.250				-.4248	-.4463	-.4213	-.3964
.274			-.3045				
.339		-.2376					
.362	-.0023						
.400				-.5061	-.5617		-.5600
.402			-.4313				
.497	.0000						
.550				-.5310	-.5947		
.565			.0000				
.600							-.5546
.650						-.5883	
.700	-.3350				-.1909		
.725				-.1922			
.750						-.5476	-.5663
.760			-.1646				
.775				-.1554	-.4302		
.808			-.0135				
.834	-.0158						
.850				-.1136	-.3300	-.3854	
.857			.0127				
.865	.0728						
.900	.0557			-.0737			-.4767
.905			.0254		-.1832		
.950				-.0261		-.3219	
.953			.0029				
.965	-.0239						

ARC11-716 IA14 O1+T12+S12N23+AT10 UPPER WING (RB1U33)

ALPHAO(7) = 1.920 BETAO (5) = -2.020

SECTION (1)UPPER WING DEPENDENT VARIABLE CP

Y/BW	.2990	.3640	.4270	.5340	.6730	.7800	.8870
X/CW							
.000	-.0733	-.0971	.4392	.6786	.6302	.5829	.6508
.020				.2703	.2748	.2193	.2174
.025			.1624				
.040		-.0538					
.045			.0876				
.050	-.1372			.0537	.0316	.0178	-.0072
.080				-.1092			
.085			-.0580				
.086		.0095					
.094	-.1431						
.130				-.3107	-.3139	-.2622	-.2389
.163		.0000					
.177			-.1958				
.193		-.0606					
.229	-.1008						
.250				-.4105	-.4477	-.4244	-.3980
.274			-.2954				
.339		-.2270					
.362	-.0229						
.400				-.4688	-.5536		-.5604
.402			-.3976				
.497	.0000						
.550				-.4887	-.5692		
.565			.0000				
.600							-.5[illegible]
.650						-.5768	
.700	-.3099				-.1837		
.725				-.1877			
.750						-.5419	-.5606
.760			-.1440				
.775				-.1439	-.2820		
.808			.0027				
.834	-.0182						
.850				-.0762	-.2087	-.3687	
.857			-.0002				
.865	.0471						
.900	.0266			-.0329			-.4096
.905			-.0020		-.1144		
.950				-.0048		-.3225	
.953			-.0273				
.965	-.0495						

ARC11-716 IA14 O1+T12+S12N25+AT10 UPPER WING (RB1U33)

ALPHAO(7) = 1.920 BETAO (6) = .010

SECTION (1)UPPER WING DEPENDENT VARIABLE CP

Y/SW	.2990	.3640	.4270	.5340	.6730	.7100	.8870
X/CW							
.000	-.1166	-.1423	.3865	.6261	.5850	.5355	.5929
.020				.2222	.2369	.1899	.2012
.025			.1286				
.040		-.0570					
.045			.0656				
.050	-.1871			.0223	.0044	-.0049	-.0223
.080				-.1261			
.085			-.0704				
.086		-.0020					
.094	-.1808						
.150				-.3061	-.3179	-.2721	-.2412
.163		.0000					
.177			-.1907				
.193		-.0465					
.229	-.1035						
.250				-.3814	-.4385	-.4307	-.4011
.274			-.2671				
.339		-.2049					
.362	-.0070						
.400				-.4371	-.5344		-.5603
.402			-.3821				
.497	.0000						
.550				-.4651	-.5397		
.565			.0000				
.600							-.5546
.650						-.5733	
.700	-.2763				-.1761		
.725				-.1873			
.750						-.5171	-.5535
.760			-.1513				
.775				-.1143	-.2415		
.808			-.0085				
.834	-.0280						
.850				-.0440	-.2072	-.3202	
.857			-.0255				
.865	.0186						
.900	-.0018			-.0322			-.3680
.905			-.0301		-.0654		
.950				-.0274		-.2805	
.953			-.0531				
.965	-.0703						

ARC11-716 IA14 O1+T12+S12N25+AT10 UPPER WING (RB1U33)

ALPHAO(7) = 1.920 BETAO (7) = 2.050

SECTION (1)UPPER WING DEPENDENT VARIABLE CP

Y/BW	.2990	.3640	.4270	.5340	.6730	.7800	.8870
X/CW							
.000	-.2072	-.1774	.3113	.5709	.5222	.4895	.5279
.020				.1897	.2111	.1675	.1634
.025			.0942				
.040		-.0473					
.045			.0307				
.050	-.2248			.0076	-.0057	-.0156	-.0448
.080				-.1286			
.085			-.0702				
.086		-.0027					
.094	-.2235						
.150				-.2836	-.3022	-.2689	-.2500
.163		.0000					
.177			-.1677				
.193		-.0205					
.229	-.0961						
.250				-.3721	-.4093	-.4234	-.4110
.274			-.2395				
.339		-.1879					
.362	.0146						
.400				-.4498	-.5013		-.5612
.402			-.3690				
.497	.0000						
.550				-.4693	-.5100		
.565			.0000				
.600							-.5656
.650						-.5609	
.700	-.2412				-.1691		
.725				-.1968			
.750						-.4728	-.4952
.760			-.1509				
.775				-.0919	-.2446		
.808			-.0297				
.834	-.0448						
.850				-.0557	-.1699	-.2770	
.857			-.0555				
.865	-.0142						
.900	-.0346			-.0672			-.2964
.905			-.0617		-.0191		
.950				-.0761		-.2403	
.953			-.0800				
.965	-.1008						

ARC11-716 IA14 O1+T12+S12N25+AT10 UPPER WING (RB1U33)

ALPHAO(T) = 1.900 BETAO (B) = 4.080

SECTION (1)UPPER WING DEPENDENT VARIABLE CP

Y/BW	.2990	.3640	.4270	.5340	.6730	.7800	.8870
X/CW							
.000	-.2967	-.2126	.1870	.5346	.4723	.4737	.5342
.020				.1721	.1815	.1639	.1495
.025			.0341				
.040		-.0564					
.045			.0020				
.050	-.2651			-.0023	-.0248	-.0150	-.0500
.080				-.1316			
.085			-.0720				
.086		-.0102					
.094	-.2439						
.150				-.2743	-.3099	-.2584	-.2457
.163		.0000					
.177			-.1504				
.193		-.0092					
.229	-.0775						
.250				-.3619	-.3071	-.4130	-.4067
.274			-.2311				
.339		-.1755					
.362	.0228						
.400				-.4393	-.4765		-.5555
.402			-.3575				
.497	.0000						
.550				-.4222	-.4879		
.565			.0000				
.600							-.5436
.650						-.5389	
.700	-.1870				-.1622		
.725				-.1425			
.750						-.3935	-.4469
.760			-.1380				
.775				-.0379	-.1743		
.800			-.0255				
.834	-.0652						
.850				-.0382	-.0844	-.2405	
.857			-.0492				
.865	-.0138						
.900	-.0228			-.0598			-.2745
.905			-.0494		.0144		
.950				-.0617		-.1157	
.953			-.0523				
.965	-.0642						

ARC11-716 IA14 O1+T12+S12N25+AT10 UPPER WING (RB1U33)

ALPHAO(7) = 2.040 BETAO (9) = 6.080

SECTION (1)UPPER WING DEPENDENT VARIABLE CP

Y/BW	.2990	.3640	.4270	.5340	.6730	.7800	.8870
X/CW							
.000	-.4096	-.1704	.0787	.5049	.4712	.4193	.4551
.020				.1638	.1834	.1238	.1120
.025			.0035				
.040		-.1107					
.045			-.0109				
.050	-.3108			-.0013	-.0253	-.0450	-.0778
.080				-.1305			
.085			-.0393				
.086		-.0805					
.094	-.2435						
.150				-.2648	-.3060	-.2780	-.2598
.163		.0000					
.177			-.1233				
.193		-.0033					
.229	-.0588						
.250				-.3451	-.3878	-.4210	-.4187
.274			-.1946				
.339		-.1496					
.362	.0216						
.400				-.4078	-.4707		-.5604
.402			-.2918				
.497	.0000						
.550				-.3100	-.4577		
.565			.0000				
.600							-.5435
.650						-.5339	
.700	-.1031				-.1754		
.725				-.1557			
.750						-.3527	-.3945
.760			-.1714				
.775				-.0807	-.1203		
.808			-.0800				
.834	-.0892						
.850				-.0868	-.0641	-.1478	
.857			-.1005				
.865	-.0601						
.900	-.0725			-.1034			-.2203
.905			-.0906		-.0022		
.950				-.1034		.0340	
.955			-.0987				
.965	-.1162						

ARC11-716 IA14 O1+T12+S12N25+AT10 UPPER WING (RB1U33)

ALPHAO(7) = 2.030 BETAO (10) = 8.110

SECTION (1)UPPER WING DEPENDENT VARIABLE CP

Y/BW	.2990	.3640	.4270	.5340	.6730	.7800	.8870
X/CW							
.000	-.4974	-.0951	.0843	.2786	.4307	.3913	.4039
.020				.0686	.1682	.1102	.0841
.025			.0216				
.040		-.0416					
.045			.0091				
.050	-.3813			-.0445	-.0270	-.0533	-.0940
.080				-.1307			
.085			-.0352				
.086		-.0377					
.094	-.2598						
.150				-.2341	-.2893	-.2774	-.2684
.163		.0000					
.177			-.1246				
.193		.0113					
.229	.0292						
.250				-.3249	-.3634	-.4011	-.4192
.274			-.1953				
.330		-.1615					
.362	.0367						
.400				-.3874	-.4598		-.5535
.492			-.3004				
.497	.0000						
.550				-.2141	-.4469		
.565			.0000				
.600							-.5384
.650						-.5240	
.700	-.0557				-.1754		
.725				-.1573			
.750						-.2504	-.3524
.760			-.1585				
.775				-.1018	-.1058		
.808			-.0949				
.834	-.0952						
.850				-.1205	-.0787	-.1037	
.857			-.1172				
.865	-.0605						
.900	-.0908			-.1337			-.2067
.935			-.1078		-.0485		
.950				-.1302		.0229	
.953			-.1209				
.965	-.1319						

ARC11-716 IA14 O1+T12+S12N25+AT10 UPPER WING (RB1U33)

ALPHAO(7) = 2.350 BETAO (11) = 10.150

SECTION (1:UPPER WING DEPENDENT VARIABLE CP

Y/BW	.2990	.3640	.4270	.5340	.6730	.7800	.8870
X/CW							
.000	-.5190	-.1252	.0300	.1505	.3154	.3411	.3876
.020				-.0114	.0823	.0659	.0480
.025			.0036				
.040		-.0710					
.045			-.0158				
.050	-.4357			-.0801	-.0752	-.0907	-.1123
.080				-.1389			
.085			-.0508				
.086		-.0757					
.094	-.2870						
.150				-.2060	-.2915	-.2940	-.2663
.163		.0000					
.177			-.1478				
.193		.0166					
.229	-.3171						
.250				-.2860	-.3625	-.4039	-.4162
.274			-.2091				
.339		-.1670					
.362	.0306						
.400				-.3294	-.4441		-.5430
.402			-.3137				
.497	.0000						
.550				-.1897	-.3628		
.565			.0000				
.600							-.5440
.650						-.4139	
.700	-.1115				-.1835		
.725				-.1573			
.750						-.2128	-.3283
.760			-.1560				
.775				-.1202	-.0979		
.808			-.1049				
.834	-.1078						
.850				-.1220	-.0903	-.0613	
.857			-.1391				
.865	-.0835						
.900	-.1155			-.1348			-.1670
.905			-.1337		-.0646		
.950				-.1228		.0463	
.953			-.1331				
.965	-.1653						

DATE 10 JAN 75 TABULATED PRESSURE DATA - IA14A - VOL. 6

ARC11-716 IA14 O1+T12+S12N25+AT10 UPPER WING (RB1U33)

ALPHAO(8) = 4.300 BETAO (1) = -9.980

SECTION (1)UPPER WING DEPENDENT VARIABLE CP

Y/BW	.2990	.3640	.4270	.5340	.6730	.7800	.8870
X/CW							
.000	.1863	.0386	.6035	.8568	.8295	.7959	.7813
.020				.2422	.2627	.1792	.1240
.025			.1857				
.040		.0531					
.045			.0762				
.050	.0313			.0031	-.0064	-.0319	-.1138
.080				-.1731			
.085			-.1045				
.086		.0596					
.094	.0223						
.150				-.4051	-.3678	-.3321	-.3195
.163		.0000					
.177			-.2653				
.193		-.0544					
.229	-.0124						
.250				-.5223	-.5109	-.4876	-.4545
.274			-.3586				
.339		-.2661					
.362	.0480						
.400				-.5825	-.6359		-.6070
.402			-.4523				
.497	.0000						
.550				-.5917	-.6312		
.565			.0000				
.600							-.6016
.650						-.6185	
.700	-.3678				-.2071		
.725				-.4984			
.750						-.5623	-.6003
.760			-.1797				
.775				-.2844	-.5290		
.808			-.1175				
.834	-.0694						
.850				-.1388	-.4792	-.4881	
.857			-.0843				
.865	.0570						
.900	.0772			-.0475			-.5505
.905			-.0464		-.3990		
.950				-.0502		-.3883	
.955			-.0046				
.965	.0032						

ARC11-716 IA14 D1+T12+S12N25+AT10 UPPER WING (RB1U33)

ALPHAO(8) = 4.200 BETAO (2) = -8.090

SECTION (1)UPPER WING DEPENDENT VARIABLE CP

Y/BW	.2990	.3640	.4270	.5340	.6 30	.7800	.8870
X/CW							
.000	.1542	.0043	.5310	.8186	.7919	.7613	.7528
.020				.2136	.2446	.1622	.1120
.025			.1478				
.040		.0012					
.045			.0581				
.050	-.0060			-.0219	-.0248	-.0463	-.1198
.080				-.1946			
.085			-.1081				
.086		.0373					
.094	-.0155						
.150				-.4169	-.3750	-.3375	-.3259
.163		.0000					
.177			-.2720				
.193		-.0886					
.229	-.0556						
.250				-.5132	-.5144	-.4908	-.4615
.274			-.3603				
.339		-.2734					
.362	.0021						
.400				-.5802	-.6363		-.6101
.402			-.4667				
.497	.0000						
.550				-.5978	-.6475		
.565			.0000				
.600							-.6044
.650						-.6235	
.700	-.3834				-.2089		
.725				-.3674			
.750						-.5691	-.3047
.760			-.2098				
.775				-.2200	-.3454		
.808			-.1390				
.834	-.0499						
.850				-.1572	-.4877	-.4908	
.837			-.0898				
.865	.0679						
.900	.0721			-.1070			-.5428
.905			-.0355		-.4142		
.950				-.0724		-.3938	
.953			.0031				
.965	-.0134						

ARC11-716 1A14 O1+T12+S12N25+AT10 UPPER WING (RB1U33)

ALPHAO(8) = 4.200 BETAO (3) = -5.990

SECTION (1)UPPER WING DEPENDENT VARIABLE CP

Y/SW	.2990	.3640	.4270	.5340	.6730	.7800	.8870
X/CW							
.000	.0804	-.0426	.5013	.7639	.7464	.7212	.7133
.020				.1826	.2176	.1407	.0842
.025			.1294				
.040		-.0439					
.045			.0390				
.050	-.0535			-.0316	-.0448	-.0641	-.1431
.080				-.1946			
.085			-.1198				
.086		.0043					
.094	-.0571						
.150				- 4072	-.3844	-.3496	-.3406
.163		.0000					
.177			-.2685				
.193		-.0039					
.229	-.0964						
.250				-.4957	-.5165	-.4986	-.4747
.274			-.3631				
.330		-.2802					
.3[illegible]	-.0181						
.4[illegible]				-.5661	-.6318		-.6180
.402			-.4640				
.497	.0000						
.550				-.5847	-.6517		
.565			.0000				
.600							-.6077
.650						-.6270	
.700	-.3935				-.2073		
.725				-.2880			
.750						-.5700	-.6077
.780			-.2573				
.775				-.2330	-.5244		
.808			-.1501				
.834	-.0357						
.850				-.1508	-.4397	-.4811	
.857			-.0679				
.865	.0709						
.900	.0634			-.0977			-.5537
.905			.0052		-.40[illegible]		
.950				-.0696		-.3904	
.953			.0096				
.965	-.0295						

ARC11-716 TA14 01+T12+S12N25+AT10 UPPER WING (RB1U33)

ALPHA(8) = 4.200 BETA0 (4) = -3.970

SECTION : 1)UPPER WING DEPENDENT VARIABLE CP

Y/BW	.2990	.3640	.4270	.5340	.6730	.7800	.8870
X/CW							
.000	.0209	-.1026	.4625	.7125	.7002	.6741	.6751
.020				.1843	.1945	.1276	.0693
.025			.1073				
.040		-.0789					
.045			.0206				
.050	-.1029			-.0295	-.0580	-.0732	-.1531
.080				-.1908			
.085			-.1264				
.086		-.0259					
.094	-.1036						
.150				-.3985	-.3835	-.3510	-.3461
.163		.0000					
.177			-.2549				
.193		-.0946					
.229	-.1203						
.250				-.5013	-.5149	-.4973	-.4788
.274			-.3677				
.339		-.2850					
.362	-.0322						
.400				-.5749	-.6290		-.6169
.402			-.4740				
.497	.0000						
.550				-.5884	-.6542		
.565			.0000				
.600							-.6107
.630						-.6402	
.700	-.3788				-.2001		
.725				-.2875			
.750						-.5600	-.6141
.760			-.2296				
.775				-.1775	-.5294		
.808			-.0915				
.834	-.0215						
.850				-.1213	-.4572	-.4636	
.857			-.0282				
.865	.0592						
.900	.0454			-.1160			-.5278
.905			.0034		-.3331		
.950				-.1094		-.3904	
.953			-.0181				
.965	-.0499						

DATE 10 JAN 75 TABULATED PRESSURE DATA - IA14A - VOL. 6

ARC11-716 IA14 O1+T12+S12N25+AT10 UPPER WING (RB1U33)

ALPHAO(8) = 4.220 BETAO (5) = -2.000

SECTION (1)UPPER WING DEPENDENT VARIABLE CP

X/CW \ Y/SW	.2990	.3640	.4270	.5340	.6730	.7800	.8870
.000	-.0362	-.1618	.4213	.6927	.6456	.6288	.6369
.020				.1619	.1785	.1127	.0598
.025			.09 J				
.040		-.0905					
.045			.0188				
.050	-.1395			-.0457	-.0660	-.0825	-.1562
.080				-.2036			
.085			-.1349				
.086		-.0385					
.094	-.1412						
.150				-.4059	-.3905	-.3534	-.3465
.163		.0000					
.177			-.2517				
.193		-.1004					
.229	-.1211						
.250				-.4918	-.5182	-.4981	-.4821
.274			-.3557				
.339		-.2807					
.362	-.0463						
.400				-.5580	-.6243		-.6164
.402			-.4422				
.497	.0000						
.550				-.5454	-.6414		
.565			.0000				
.600							-.6078
.650						-.6346	
.700	-.3576				-.1939		
.725				-.2127			
.750						-.5538	-.6071
.760			-.1921				
.775				-.1670	-.4929		
.808			-.0586				
.834	-.0189						
.850				-.1388	-.3999	-.4536	
.857			-.0345				
.865	.0340						
.900	.0200			-.1206			-.4895
.905			-.0191		-.1072		
.950				-.0952		-.3882	
.953			-.0397				
.965	-.0710						

ARC11-716 IA14 O1+T12+S12N25+AT10 UPPER WING (RB1U33)

ALPHAO(8) = 4.240 BETAO (6) = -.070

SECTION (11UPPER WING DEPENDENT VARIABLE CP

Y/BW	.2990	.3640	.4270	.5340	.6730	.7800	.8870
X/CW							
.000	-.1339	-.2287	.3542	.6443	.5987	.5775	.6012
.020				.1131	.1446	.0884	.0438
.025			.0428				
.040		-.1047					
.045			-.0246				
.050	-.1879			-.0777	-.0895	-.1003	-.1680
.080				-.2241			
.085			-.1601				
.086		-.0393					
.094	-.1885						
.150				-.4083	-.3978	-.3629	-.3532
.163		.0000					
.177			-.2504				
.193		-.0971					
.229	-.1251						
.250				-.4753	-.5212	-.5016	-.4871
.274			-.3229				
.339		-.2481					
.362	-.0293						
.400				-.4975	-.6105		-.6169
.402			-.4218				
.497	.0000						
.550				-.5096	-.6070		
.565			.0000				
.600							-.6058
.650						-.6262	
.700	-.3466				-.1898		
.725				-.1885			
.750						-.5632	-.6058
.760			-.1840				
.775				-.1608	-.3938		
.808			-.0526				
.834	-.0296						
.850				-.1242	-.2003	-.4501	
.857			-.0467				
.865	-.0012						
.900	-.0131			-.0994			-.4567
.905			-.0415		-.1230		
.950				-.0740		-.3857	
.953			-.0657				
.965	-.0979						

ARC11-716 IA14 O1+T12+S12N25+AT10 UPPER WING (RB1U33)

ALPHAO(8) = 4.220 BETAO (7) = 1.990

SECTION (1)UPPER WING DEPENDENT VARIABLE CP

X/CW \ Y/BW	.2990	.3640	.4270	.5340	.6730	.7800	.8870
.000	-.2248	-.2943	.2588	.5717	.5592	.5286	.5607
.020				.0674	.1264	.0682	.0339
.025			.0040				
.040		-.0994					
.045			-.0633				
.050	-.2242			-.0955	-.0974	-.1137	-.1690
.080				-.2246			
.085			-.1697				
.086		-.0448					
.094	-.2267						
.150				-.3751	-.3917	-.3628	-.3511
.163		.0000					
.177			-.2334				
.193		-.0803					
.229	-.1087						
.250				-.4269	-.5005	-.4955	-.4819
.274			-.2906				
.339		-.2236					
.362	-.0114						
.400				-.4676	-.5735		-.6095
.402			-.4054				
.497	.0000						
.550				-.4908	-.5751		
.565			.0000				
.600							-.5946
.650						-.6086	
.700	-.3339				-.1910		
.725				-.1995			
.750						-.5650	-.5838
.760			-.1862				
.775				-.1651	-.2745		
.808			-.0583				
.834	-.0359						
.850				-.1115	-.2083	-.4281	
.857			-.0669				
.865	-.0190						
.900	-.0387			-.0847			-.4169
.905			-.0702		-.1171		
.950				-.0716		-.3242	
.953			-.0959				
.965	-.1222						

ARC11-716 IA14 O1+T12+S12N25+AT10 UPPER WING (RB1U33)

ALPHAO(B) = 4.430 BETAO (B) = 4.100

SECTION (1)UPPER WING DEPENDENT VARIABLE CP

Y/BW	.2990	.3640	.4270	.5340	.6730	.7800	.8870
X/CW							
.000	-.3257	-.2877	.1169	.5190	.5047	.5320	.5227
.020				.0475	.0814	.0528	.0022
.025			-.0623				
.040		-.1416					
.045			-.1049				
.050	-.2728			-.1041	-.1300	-.1189	-.1962
.080				-.2255			
.085			-.1575				
.086		-.0751					
.094	-.2557						
.150				-.3681	-.3960	-.3613	-.3634
.163		.0000					
.177			-.2182				
.193		-.0610					
.229	-.0908						
.250				-.4130	-.4793	-.4943	-.4917
.274			-.2787				
.339		-.2151					
.362	-.0018						
.400				-.4618	-.5516		-.6148
.402			-.3909				
.497	.0000						
.550				-.4524	-.5474		
.565			.0000				
.600							-.5926
.650						-.6024	
.700	-.2987				-.1773		
.725				-.1825			
.750						-.5556	-.5586
.760			-.1617				
.775				-.1014	-.2060		
.800			-.0456				
.834	-.0361						
.850				-.0635	-.1850	-.3644	
.857			-.0688				
.865	-.0196						
.900	-.0301			-.0719			-.4006
.905			-.0727		-.0817		
.950				-.0722		-.1757	
.953			-.0911				
.965	-.0988						

DATE 10 JAN 75 TABULATED PRESSURE DATA - IA14A - VOL. 6

ARC11-716 IA14 D1+T12+S12N25+AT10 UPPER WING (RD1U33)

ALPHAO(8) = 4.410 BETAO (9) = 5.060

SECTION (1)UPPER WING DEPENDENT VARIABLE CP

Y/BW	.2990	.3640	.4270	.5340	.6730	.7800	.8870
X/CW							
.000	-.4542	-.2108	.0153	.4071	.4959	.4526	.4804
.020				.0247	.0969	.0223	-.0059
.025			-.0606				
.040		-.1522					
.045			-.0682				
.050	-.3414			-.1041	-.1156	-.1430	-.1976
.080				-.2105			
.085			-.0926				
.086		-.1212					
.094	-.2867						
.150				-.3394	-.3905	-.3677	-.3636
.163		.0000					
.177			-.1732				
.193		-.0658					
.229	-.0714						
.250				-.3791	-.4769	-.4914	-.4885
.274			-.2385				
.339		-.1936					
.362	.0056						
.400				-.4336	-.5352		-.6114
.402			-.3269				
.497	.0000						
.550				-.3585	-.5279		
.565			.0000				
.600							-.5830
.650						-.5833	
.700	-.1763				-.1826		
.725				-.1781			
.750						-.4559	-.5185
.760			-.1926				
.775				-.1083	-.2079		
.808			-.1123				
.834	-.1041						
.850				-.1014	-.1269	-.2110	
.857			-.1323				
.865	-.0767						
.900	-.0874			-.1133			-.3626
.905			-.1232		-.0257		
.950				-.1151		-.1134	
.955			-.1310				
.965	-.1428						

ARC11-716 IA14 O1+T12+S12N25+AT10 UPPER WING (RB1U33)

ALPHAO(8) = 4.410 BETAO (10) = 8.150

SECTION (1)UPPER WING DEPENDENT VARIABLE CP

X/CW \ Y/BW	.2990	.3640	.4270	.5340	.6730	.7800	.8870
.000	-.5350	-.1234	.0314	.2098	.4244	.4158	.4158
.020				-.0638	.0604	.0060	-.0443
.025			-.0220				
.040		-.0678					
.045			-.0439				
.050	-.4302			-.1462	-.1278	-.1547	-.2210
.080				-.2109			
.085			-.0822				
.086		-.0474					
.094	-.3353						
.150				-.2998	-.3757	-.3705	-.3754
.163		.0000					
.177			-.1662				
.193		-.0646					
.229	.0241						
.250				-.3528	-.4434	-.4927	-.4950
.274			-.2320				
.339		-.1977					
.362	.0244						
.400				-.4011	-.5195		-.6128
.402			-.3254				
.497	.0000						
.550				-.2269	-.4951		
.565			.0000				
.600							-.5824
.650						-.5724	
.700	-.0783				-.1871		
.725				-.1713			
.750						-.3333	-.4903
.760			-.1979				
.775				-.1267	-.1761		
.800			-.1298				
.834	-.1197						
.850				-.1417	-.1152	-.2135	
.857			-.1524				
.865	-.0936						
.900	-.1129			-.1495			-.3094
.905			-.1400		-.0680		
.950				-.1448		-.0443	
.953			-.1504				
.965	-.1583						

ARC11-716 IA14 O1+T12+S12N25+AT1D UPPER WING (RB1U33)

ALPHAD(8) = 4.390 BETAD (11) = 10.140

SECTION (1)UPPER WING DEPENDENT VARIABLE CP

X/CW \ Y/BW	.2990	.3640	.4270	.5340	.6730	.7800	.8870
.000	-.5510	-.1425	-.0173	.0774	.2761	.3412	.4051
.020				-.1137	-.0319	-.0426	-.0478
.025			-.0402				
.040		-.0871					
.045			-.0583				
.050	-.4887			-.1667	-.1911	-.1878	-.2200
.080				-.2054			
.085			-.0934				
.086		-.0801					
.094	-.3949						
.150				-.2532	-.3721	-.3738	-.3640
.163		.0000					
.177			-.1864				
.193		-.0491					
.229	-.0179						
.250				-.2909	-.4203	-.4839	-.4846
.274			-.2530				
.339		-.1819					
.362	.0146						
.400				-.3300	-.4905		-.6011
.402			-.3365				
.497	.0000						
.550				-.1837	-.3599		
.565			.0000				
.600							-.5683
.690						-.4258	
.700	-.1123				-.1922		
.725				-.1585			
.750						-.2640	-.4305
.760			-.1806				
.775				-.1352	-.1350		
.808			-.1310				
.834	-.1330						
.850				-.1306	-.1162	-.1164	
.857			-.1544				
.865	-.1071						
.900	-.1322			-.1378			-.2270
.905			-.1458		-.0936		
.950				-.1296		.0119	
.953			-.1375				
.965	-.1838						

ARC11-716 IA14 D1+T12+S12N25+AT10 UPPER WING (RB1U33)

ALPHAO(9) = 6.340 BETAO (1) = -9.960

SECTION (1)UPPER WING DEPENDENT VARIABLE CP

X/CW \ Y/BW	.2990	.3640	.4270	.5340	.6730	.7800	.8870
.000	.1865	.0483	.6085	.8647	.8272	.7775	.7456
.020				.1623	.1806	.0721	.0141
.025			.1405				
.040		.0528					
.045			.0230				
.050	.0319			-.0660	-.0925	-.1260	-.2165
.080				-.2365			
.085			-.1584				
.086		.0720					
.094	.0177						
.150				-.4653	-.4272	-.4053	-.3978
.163		.0000					
.177			-.3366				
.193		-.1034					
.229	-.0204						
.250				-.5839	-.5601	-.5423	-.5125
.274			-.4187				
.339		-.3025					
.362	.0511						
.400				-.6451	-.6712		-.6429
.402			-.5035				
.497	.0000						
.550				-.6475	-.6400		
.565			.0000				
.600							-.6143
.650						-.6405	
.700	-.4069				-.2220		
.725				-.5884			
.750						-.5420	-.5826
.760			-.2356				
.775				-.5210	-.5415		
.800			-.1847				
.834	-.1239						
.850				-.3674	-.5124	-.4796	
.857			-.1470				
.865	.0316						
.900	.0718			-.2672			-.4601
.901			-.0951		-.4400		
.930				-.1548		-.4074	
.933			-.0505				
.965	-.0207						

DATE 10 JAN 75 TABULATED PRESSURE DATA - IA14A - VOL. 6

ARC11-716 IA14 O1+T12+S12N25+ATID UPPER WING (RB1U33)

ALPHAO(9) = 5.380 BETAO (2) = -7.970

SECTION (1)UPPER WING DEPENDENT VARIABLE CP

X/CW \ Y/BW	.2990	.3640	.4270	.5340	.6730	.7800	.8870
.000	.1494	-.0103	.5624	.8311	.7893	.7403	.7115
.020				.1287	.1541	.0487	-.0103
.025			.0999				
.040		-.0040					
.045			-.0092				
.050	-.0087			-.0901	-.1131	-.1478	-.2362
.060				-.2585			
.065			-.1905				
.086		.0113					
.094	-.0204						
.150				-.4782	-.4413	-.4185	-.4133
.163		.0000					
.177			-.3551				
.193		-.1359					
.229	-.0543						
.250				-.5894	-.5718	-.5546	-.5269
.274			-.4392				
.339		-.3229					
.362	.0053						
.400				-.6496	-.6809		-.6525
.402			-.5141				
.497	.0000						
.550				-.6561	-.6515		
.565			.0000				
.600							-.6221
.650						-.6508	
.700	-.4197				-.2227		
.725				-.5777			
.750						-.5494	-.5847
.760			-.2575				
.775				-.4784	-.5556		
.808			-.2046				
.834	-.1028						
.850				-.3007	-.5191	-.4916	
.857			-.1569				
.865	.0366						
.900	.0625			-.1828			-.4617
.905			-.0961		-.4500		
.950				-.0911		-.4211	
.953			-.0469				
.965	-.0302						

ARC11-716 IA14 O1+T12+S12N25+AT10 UPPER WING (RB1U53)

ALPHA0(9) = 5.980 BETA0 (3) = -5.000

SECTION (1)UPPER WING DEPENDENT VARIABLE CP

Y/3W	.2990	.3840	.4270	.5340	.6730	.7800	.8570
X/CW							
.000	.0617	-.0531	.4989	.7830	.7555	.7071	.6823
.020				.1115	.1488	.0488	-.0168
.025			.0718				
.040		-.0481					
.045			-.0408				
.050	-.0506			-.1022	-.1146	-.1486	-.2383
.083				-.2637			
.089			-.2057				
.088		-.0217					
.094	-.0374						
.150				-.4755	-.4392	-.4149	-.4132
.163		.0000					
.177			-.3415				
.193		-.1422					
.229	-.0938						
.250				-.5696	-.5676	-.5499	-.5261
.274			-.4204				
.339		-.3094					
.362	-.0384						
.400				-.6217	-.6749		-.6513
.402			-.4639				
.497	.0000						
.550				-.6238	-.6523		
.565			.0000				
.600							-.6222
.650						-.6470	
.700	-.4158				-.2137		
.725				-.2785			
.750						-.5580	-.5913
.760			-.2723				
.775				-.2711	-.5582		
.800			-.2010				
.834	-.0649						
.850				-.1840	-.5204	-.4930	
.857			-.1385				
.865	.0378						
.900	.0474			-.1498			-.4689
.905			-.0669		-.4528		
.950				-.1277		-.4168	
.955			-.0191				
.965	-.0470						

ARC11-716 IA14 O1+T12+S12N25+AT10 UPPER WING (RB1U33)

ALPHAO(9) = 5.990 BETAO (4) = -4.010

SECTION (1)UPPER WING DEPENDENT VARIABLE CP

Y/BW	.2990	.3640	.4270	.5100	.6730	.7800	.8870
X/CW							
.000	.0290	-.1167	.4345	.7412	.7146	.6700	.6450
.020				.0909	.1306	.0376	-.0349
.025			.0424				
.040		-.0936					
.045			-.0479				
.050	-.0987			-.1095	-.1248	-.1562	-.2470
.080				-.2050			
.085			-.1915				
.086		-.0601					
.094	-.0990						
.150				-.4703	-.4397	-.4171	-.4178
.163		.0000					
.177			-.3197				
.193		-.1419					
.229	-.1240						
.250				-.5760	-.5640	-.5488	-.5300
.274			-.4085				
.339		-.3095					
.362	-.0506						
.400				-.6296	-.6688		-.6537
.402			-.4942				
.497	.0000						
.550				-.6376	-.6497		
.56[illegible]			.0000				
.600							-.6225
.650						-.6475	
.700	-.4054				-.2064		
.725				-.2910			
.750						-.5616	-.5885
.760			-.2798				
.775				-.2530	-.5472		
.808			-.1656				
.834	-.0345						
.850				-.1989	-.4916	-.4931	
.857			-.0926				
.865	.0381						
.900	.0329			-.1633			-.4698
.905			-.0256		-.4577		
.950				-.1354		-.4192	
.953			-.0225				
.965	-.0600						

DATE 10 JAN 75 TABULATED PRESSURE DATA - IA14A - VOL. 8 (RB1U33)

ARC11-716 IA14 O1+T12+S12N25+AT10 UPPER WING

ALPHAO(9) = 6.010 BETAO (5) = -2.060

SECTION (1)UPPER WING DEPENDENT VARIABLE CP

Y/CW \ Y/BW	.2990	.3640	.4270	.5340	.6730	.7800	.8870
.000	-.0474	-.1894	.3931	.6906	.6693	.6288	.6109
.020				.0628	.1050	.0161	-.0549
.025			.0256				
.040		.1349					
.045			-.0636				
.050	-.1435			-.1264	-.1426	-.1727	-.2642
.080				-.2743			
.085			-.1971				
.086		-.0821					
.094	-.1398						
.150				-.4695	-.4461	-.4264	-.4279
.165		.0000					
.177			-.3208				
.193		-.1391					
.229	-.1458						
.250				-.5391	-.5686	-.5526	-.5390
.274			-.4099				
.339		-.3111					
.362	-.0572						
.400				-.5923	-.6673		-.6599
.402			-.4794				
.497	.0000						
.550				-.5780	-.6518		
.565			.0000				
.600							-.6354
.650						-.6523	
.700	-.3862				-.2039		
.725				-.2275			
.750						-.5991	-.6146
.760			-.2546				
.775				-.1717	-.5441		
.808			-.1208				
.834	-.0269						
.850				-.1479	-.5079	-.5084	
.857			-.0682				
.865	.0190						
.900	.0094			-.1388			-.4864
.905			-.0308		-.3811		
.950				-.1260		-.4267	
.953			-.0485				
.965	-.0819						

ARC11-716 IA14 D1+T12+S12N25+AT10 UPPER WING (RB1U33)

ALPHAO(9) = 8.020 BETAO (6) = .030

SECTION (1)UPPER WING DEPENDENT VARIABLE CP

Y/BW	.2990	.3640	.4270	.5340	.6730	.7800	.8870
X/CW							
.000	-.1331	-.2676	.3172	.6293	.6129	.5804	.5773
.020				.0320	.0716	-.0038	-.0678
.025			-.0169				
.040		-.1704					
.045			-.0923				
.050	-.1868			-.1441	-.1648	-.1883	-.2697
.080				-.2858			
.085			-.2195				
.086		-.0785					
.094	-.1894						
.150				-.4710	-.4549	-.4309	-.4301
.163		.0000					
.177			-.3104				
.193		-.1343					
.229	-.1484						
.250				-.5509	-.5661	-.5532	-.5395
.274			-.3755				
.339		-.2804					
.362	-.0418						
.400				-.5757	-.6606		-.6569
.402			-.4455				
.497	.0000						
.550				-.5575	-.6574		
.565			.0000				
.600							-.6444
.650						-.6557	
.700	-.3771				-.2015		
.725				-.2352			
.750						-.6020	-.6351
.760			-.2357				
.775				-.2190	-.6110		
.808			-.1019				
.834	-.0275						
.850				-.1868	-.3143	-.4980	
.857			-.0745				
.865	-.0049						
.900	-.0168			-.1660			-.5178
.905			-.0524		-.1304		
.950				-.1413		-.4230	
.953			-.0714				
.965	-.1062						

ARC11-716 IA14 O1+T12+S12N25+AT10 UPPER WING (R61U33)

ALPHAO(9) = 6.010 BETAO (7) = 2.060

SECTION (1)UPPER WING DEPENDENT VARIABLE CP

X/CW \ Y/BW	.2990	.3640	.4270	.5340	.6730	.7800	.8870
.000	-.2353	-.4161	.2079	.5762	.5599	.5364	.5380
.020				-.0116	.0461	-.0240	-.0832
.025			-.0696				
.040		-.1570					
.045			-.1386				
.050	-.2345			-.1720	-.1750	-.2015	-.2813
.080				-.2965			
.085			-.2400				
.086		-.0788					
.094	-.2305						
.150				-.4596	-.4502	-.4335	-.4378
.163		.0000					
.177			-.2659				
.193		-.1191					
.229	-.1269						
.250				-.5182	-.5610	-.5535	-.5469
.274			-.3300				
.339		-.2469					
.362	-.0299						
.400				-.5369	-.6453		-.6824
.402			-.4312				
.497	.0000						
.550				-.5449	-.6353		
.555			.0000				
.600							-.6312
.650						-.6427	
.700	-.3651				-.2026		
.725				-.2379			
.750						-.5977	-.5923
.760			-.2244				
.775				-.2192	-.3662		
.808			-.0892				
.834	-.0367						
.850				-.1769	-.2052	-.4850	
.857			-.0860				
.865	-.0283						
.900	-.0476			-.1492			-.4636
.905			-.0811		-.1743		
.950				-.1250		-.4131	
.953			-.1076				
.965	-.1324						

DATE 10 JAN 75 TABULATED PRESSUR DATA - IA14A - VOL. 6 (RB1U33)

ARC11-716 IA14 D1+T12+S12N25+AT10 UPPER WING

ALPHAO(9) = 5.990 BETAO (8) = 4.060

SECTION (1)UPPER WING DEPENDENT VARIABLE CP

X/CW \ Y/BW	.2990	.3540	.4270	.5340	.6730	.7800	.8870
.000	-.3322	-.3637	.0574	.4811	.5145	.5207	.5195
.020				-.0611	.0190	-.0321	-.0890
.025			-.1258				
.040		-.2051					
.045			-.1579				
.050	-.2805			-.1862	-.1927	-.2007	-.2781
.080				-.2883			
.085			-.2101				
.086		-.1269					
.094	-.2585						
.150				-.4260	-.4515	-.4216	-.4305
.163		.0000					
.177			-.2438				
.193		-.0992					
.229	-.1107						
.250				-.4746	-.5439	-.5432	-.5399
.274			-.3009				
.339		-.2422					
.362	-.0155						
.400				-.5115	-.6081		-.6534
.402			-.4123				
.497	.0000						
.550				-.5070	-.5979		
.565			.0000				
.600							-.6233
.650						-.6308	
.700	-.3488				-.1859		
.725				-.2341			
.750						-.5677	-.5738
.760			-.1845				
.775				-.1585	-.2365		
.808			-.0752				
.834	-.0316						
.850				-.1093	-.2069	-.5205	
.857			-.0858				
.895	-.0235						
.900	-.0355			-.1003			-.4426
.905			-.0905		-.1461		
.950				-.0998		-.4010	
.953			-.1133				
.965	-.1190						

DATE 10 JAN 75 TABULATED PRESSURE DATA - IA14A - VOL. 6 (RB1U33)

ARC11-716 IA14 D1+T12+S12N25+AT10 UPPER WING

ALPHAD(9) = 5.980 BETAD (9) = 6.090

SECTION (1)UPPER WING DEPENDENT VARIABLE CP

X/CW \ Y/BW	.2990	.3640	.4270	.5340	.6730	.7800	.8870
.000	-.4560	-.2406	-.0335	.3160	.4906	.4536	.4710
.020				-.0915	.0176	-.0496	-.0893
.025			- 0959				
.040		-.1779					
.045			-.1006				
.050	-.3558			-.1911	-.1919	-.2146	-.2775
.060				-.2763			
.065			-.1288				
.086		-.1426					
.094	-.3059						
.150				-.3847	-.4477	-.4346	-.4263
.153		.0000					
.177			-.2014				
.193		-.1035					
.229	-.0873						
.250				-.3955	-.5386	-.5431	-.5350
.274			-.2604				
.339		-.2249					
.362	.0024						
.400				-.4424	-.5810		-.6481
.402			-.3563				
.497	.0000						
.550				-.3674	-.5579		
.565			.0000				
.600							-.6152
.650						-.6251	
.700	-.2242				-.1896		
.725				-.1919			
.750						-.5836	-.5392
.760			-.2228				
.775				-.1304	-.2553		
.808			-.1416				
.834	-.1125						
.850				-.1145	-.1940	-.2762	
.857			-.1483				
.865	-.0904						
.900	-.1013			-.1239			-.4194
.905			-.1392		-.0652		
.950				-.1239		-.1660	
.953			-.1488				
.965	-.1565						

ARC11-716 IA14 O1+T12+S12N25+AT10 UPPER WING (RB1U33)

ALPHAO(9) = 5.970 BETAO (10) = 8.160

SECTION (1)UPPER WING DEPENDENT VARIABLE CP

Y/BW	.2990	.3640	.4270	.5340	.6730	.7800	.8870
X/CW							
.000	-.5381	-.1483	-.0169	.1321	.3959	.4094	.4185
.020				-.1534	-.0344	-.0903	-.1282
.025			-.0622				
.040		-.0947					
.045			-.0768				
.050	-.4503			-.2202	-.2212	-.2361	-.3042
.080				-.2833			
.085			-.1137				
.086		-.0743					
.094	-.3759						
.150				-.3363	-.4466	-.4394	-.4390
.163		.0000					
.177			-.1943				
.193		-.1119					
.229	-.0010						
.250				-.3879	-.5131	-.5453	-.5501
.274			-.2594				
.339		-.2302					
.362	.0127						
.400				-.4295	-.5551		-.6545
.402			-.3449				
.497	.0000						
.550				-.2577	-.5200		
.565			.0000				
.600							-.6176
.650						-.6023	
.700	-.1059				-.1990		
.725				-.2029			
.750						-.3971	-.5305
.760			-.2236				
.775				-.1631	-.2128		
.800			-.1618				
.834	-.1364						
.850				-.1699	-.1479	-.2340	
.857			-.1685				
.865	-.1064						
.900	-.1317			-.1660			-.4104
.905			-.1586		-.0850		
.950				-.1689		-.1067	
.953			-.1708				
.965	-.1799						

DATE 13 JAN 75 TABULATED PRESSURE DATA - IA14A - VOL. 6

ARC11-716 IA14 O1+T12+S12N25+AT10 UPPER WING (RB1U33)

ALPHAO(9) = 5.950 BETAO (11) = 10.160

SECTION (1)UPPER WING DEPENDENT VARIABLE CP

Y/BW	.2990	.3640	.4270	5340	.5730	.7800	.8870
X/CW							
.000	-.5306	-.1589	-.0759	-.0252	.2098	.3341	.3943
.020				-.2133	-.1520	-.1306	-.1465
.025			-.0749				
.040		-.1089					
.045			-.0948				
.050	-.4974			-.2211	-.2905	-.2651	-.3111
.080				-.2536			
.085			-.1279				
.086		-.0919					
.094	-.4630						
.150				-.2870	-.4421	-.4536	-.4317
.163		.0000					
.177			-.2199				
.193		-.1107					
.229	-.0271						
.250				-.2975	-.4764	-.5377	-.5410
.274			-.2907				
.339		-.2037					
.362	.0025						
.400				-.3379	-.5207		-.6421
.402			-.3730				
.49	.0000						
.550				-.1845	-.3482		
.563			.0000				
.600							-.6026
.650						-.4293	
.700	-.0940				-.2008		
.725				-.1666			
.750						-.2887	-.4985
.760			-.2136				
.775				-.1534	-.1612		
.808			-.1517				
.834	-.1529						
.850				-.1532	-.1386	-.1471	
.857			-.1720				
.865	-.1339						
.900	-.1547			-.1549			-.3448
.905			-.1567		-.1105		
.950				-.1448		-.0112	
.953			-.1603				
.965	-.1917						

ARC11-716 IA14 O1+T12+S12N25+AT10 UPPER WING (RB1U33)

ALPHAO(10) = 7.910 BETAO (1) = -10.030

SECTION (1)UPPER WING DEPENDENT VARIABLE CP

Y/BW	.2990	.3540	.4270	.5340	.6730	.7800	.8870
X/CW							
.000	.1873	.0599	.6237	.8836	.8206	.7525	.7138
.020				.1186	.1161	-.0024	-.0765
.025			.1118				
.040		.0730					
.045			-.0079				
.050	.0466			-.1116	-.1534	-.1981	-.2942
.080				-.2785			
.085			-.1982				
.086		.0914					
.094	.0146						
.150				-.5060	-.4759	-.4583	-.4594
.163		.0000					
.177			-.3824				
.193		-.1219					
.229	-.0108						
.250				-.6321	-.5995	-.5886	-.5605
.274			-.4632				
.339		-.3306					
.352	.0663						
.400				-.6953	-.6794		-.6715
.402			-.5320				
.497	.0000						
.550				-.6784	-.6541		
.565			.0000				
.600							-.6450
.650						-.6571	
.700	-.4339				-.2357		
.725				-.6139			
.750						-.5394	-.5926
.760			-.2691				
.775				-.5632	-.5538		
.808			-.2305				
.834	-.1695						
.850				-.4792	-.5350	-.5037	
.857			-.1919				
.865	.0050						
.900	.0519			-.4142			-.5248
.905			-.1458		-.4770		
.950				-.3353		-.4510	
.955			-.1057				
.965	-.0322						

ARC11-716 IA14 D1+T12+S12N25+AT10 UPPER WING (RB1U33)

ALPHAD(10) = 7.930 BETAD (2) = -8.030

SECTION (1)UPPER WING DEPENDENT VARIABLE CP

X/CW \ Y/BW	.2990	.3640	.4270	.5340	.6730	.7800	.8870
.000	.1426	-.0028	.5676	.8441	.7882	.7182	.6742
.020				.0861	.0954	-.0242	-.1021
.025			.0716				
.040		.0095					
.045			-.0513				
.050	-.0014			-.1367	-.1722	-.2173	-.3139
.080				-.3015			
.085			-.2356				
.086		.0330					
.094	-.0213						
.150				-.5223	-.4877	-.4716	-.4744
.163		.0000					
.177			-.4062				
.193		-.1606					
.229	-.0528						
.250				-.6245	-.6105	-.5990	-.5749
.274			-.4728				
.339		-.3429					
.362	.0174						
.400				-.6769	-.6769		-.6754
.402			-.5436				
.497	.0000						
.550				-.6683	-.6576		
.565			.0000				
.600							-.6559
.650						-.6615	
.700	-.4480				-.2315		
.725				-.5883			
.750						-.5432	-.5767
.750			-.2747				
.775				-.5296	-.5672		
.808			-.2491				
.834	-.1255						
.850				-.4696	-.5389	-.5138	
.857			-.1908				
.865	.0166						
.900	.0424			-.3749			-.5050
.905			-.1286		-.4715		
.950				-.2764		-.4604	
.953			-.0877				
.965	-.0476						

ARC11-716 IA14 O1+T12+S12N25+AT10 UPPER WING (RB1U33)

ALPHAO(10) = 7.810 BETAO (3) = -5.970

SECTION (1)UPPER WING DEPENDENT VARIABLE CP

Y/BW	.2990	.3640	.4270	.5340	.6730	.7800	.8870
X/CW							
.000	.0891	-.0689	.4943	.7941	.7518	.6833	.6371
.020				.0502	.0729	-.0461	-.1329
.025			.0320				
.040		-.0526					
.045			-.0909				
.050	-.0459			-.1587	-.1875	-.2365	-.3369
.080				-.3153			
.085			-.2594				
.086		-.0346					
.094	-.0624						
.150				-.5296	-.4965	-.4852	-.4897
.153		.0000					
.177			-.4089				
.193		-.1919					
.229	-.0891						
.250				-.6315	-.6185	-.6079	-.5864
.274			-.4688				
.339		-.3563					
.362	-.0400						
.400				-.6853	-.6903		-.6806
.402			-.5282				
.497	.0000						
.550				-.6730	-.6647		
.565			.0000				
.600							-.6634
.650						-.6748	
.700	-.4467				-.2303		
.725				-.5459			
.750						-.5584	-.5866
.760			-.2880				
.775				-.5132	-.5775		
.808			-.2482				
.834	-.0751						
.850				-.3688	-.5375	-.5274	
.857			-.1712				
.865	.0321						
.900	.0302			-.2365			-.5093
.905			-.1052		-.4749		
.930				-.1307		-.4592	
.953			-.0643				
.965	-.0642						

DATE 10 JAN 75 TABULATED PRESSURE DATA - IA14A - VOL. 6 (RB1U53)

ARC11-716 IA14 01+T12+S12N25+AT10 UPPER WING

ALPHAD(10) = 7.83 , BETAD (4) = -4.000

SECTION (1)UPPER WING DEPENDENT VARIABLE CP

Y/BW	.2990	.3640	.4270	.5340	.6730	.7800	.8870
X/CW							
.000	.0235	-.1407	.4190	.7437	.7126	.6460	.6020
.020				.0149	.0548	-.0630	-.1561
.025			-.0183				
.040		-.1100					
.045			-.1264				
.050	-.0944			-.1799	-.1990	-.2476	-.3502
.080				-.3292			
.085			-.2149				
.086		-.0812					
.094	-.1031			-.5287	-.4983	-.4880	-.4981
.150							
.163		.0000					
.177			-.3870				
.193		-.2034					
.229	-.1251			-.6185	-.6153	-.6064	-.5920
.250							
.274			-.4523				
.339		-.3371					
.362	-.0714			-.6689	-.7017		-.6816
.400							
.402			-.5209				
.497	.0000			-.6833	-.6727		
.550							
.565			.0000				-.6634
.600						-.6756	
.650					-.2172		
.700	-.4299			-.4522			
.725						-.5652	-.5877
.750							
.760			-.3398				
.775				-.3518	-.5829		
.808			-.2164				
.834	-.0405			-.2045	-.5643	-.5283	
.850							
.857			-.1448				
.865	.0276			-.1520			-.5070
.900	.0194				-.4922		
.905			-.0622				
.950				-.1166		-.4429	
.953			-.0327				
.965	-.0823						

DATE 10 JAN 75 TABULATED PRESSURE DATA - IA14A - VOL. 6

ARC11-716 IA14 D1+T12+S12N25+AT10 UPPER WING (R91U33)

ALPHAD(10) = 7.830 BETAD (5) = -2.030

SECTION (1)UPPER WING DEPENDENT VARIABLE CP

Y/BW	.2990	.3640	.4270	.5340	.6730	.7800	.8870
X/CW							
.000	-.0571	-.2160	.3388	.6895	.6709	.6096	.5683
.020				-.0105	.0349	-.0755	-.1723
.025			-.0559				
.040		-.1667					
.045			-.1420				
.050	-.1429			-.1952	-.2111	-.2561	-.3603
.080				-.3362			
.085			-.2749				
.086		-.1267					
.094	-.1480						
.150				-.5274	-.5016	-.4913	-.5036
.163		.0000					
.177			-.3789				
.193		-.1914					
.229	-.1636						
.250				-.6122	-.6141	-.6074	-.5960
.274			-.4499				
.339		-.3358					
.362	-.0725						
.400				-.6554	-.7073		-.6964
.402			-.5025				
.497	.0000						
.550				-.6176	-.6791		
.565			.0000				
.600							-.6690
.650						-.6818	
.700	-.4104				-.2161		
.725				-.2527			
.750						-.6110	-.6364
.760			-.2993				
.775				-.1921	-.6076		
.808			-.1735				
.834	-.0343						
.850				-.1923	-.5728	-.5483	
.857			-.1127				
.865	.0073						
.900	-.0033			-.1874			-.5167
.905			-.0620		-.4716		
.950				-.1681		-.4598	
.953			-.0666				
.965	-.0945						

ARC11-716 IA14 O1+T12+S12N25+AT10 UPPER WING (RB1U33)

ALPHAD(10) = 7.840 BETAD (6) = .040

SECTION (1)UPPER WING DEPENDENT VARIABLE CP

Y/SW	.2990	.3540	.4270	.5340	.6730	.7800	.8870
X/CW							
.000	-.1551	-.3117	.2640	.6185	.6216	.5703	.5389
.020				-.0516	.0352	-.0953	-.1614
.025			-.0817				
.040		-.2206					
.045			-.1581				
.050	-.1891			-.2200	-.2341	-.2705	-.3657
.080				-.3484			
.085			-.2786				
.086		-.1409					
.094	-.1958						
.150				-.5318	-.5102	-.4980	-.5030
.163		.0000					
.177			-.3687				
.193		-.1714					
.229	-.1844						
.250				-.6330	-.6172	-.6089	-.5960
.274			-.4095				
.339		-.2981					
.362	-.0619						
.400				-.6636	-.7010		-.6944
.402			-.4567				
.497	.0000						
.550				-.5897	-.6786		
.565			.0000				
.600							-.6680
.650						-.6810	
.700	-.4051				-.2116		
.725				-.2728			
.750						-.5313	-.6445
.760			-.2797				
.775				-.2263	-.5825		
.808			-.1403				
.834	-.0329						
.850				-.2363	-.5491	-.5409	
.857			-.1099				
.865	-.0039						
.900	-.0290			-.2199			-.5215
.905			-.0773		-.5512		
.950				-.1938		-.4649	
.951			-.0941				
.965	-.1185						

ARC11-716 IA14 O1+T12+S12N25+AT10 UPPER WING (RB1U33)

ALPHAO(10) = 7.830 BETAO (7) = 2.040

SECTION (1)UPPER WING DEPENDENT VARIABLE CP

Y/BW	.2990	.3640	.4270	.5340	.6730	.7800	.8870
X/CW							
.000	-.2498	-.4991	.1381	.5583	.5587	.5211	.5027
.020				-.1106	-.0276	-.1085	-.1905
.025			-.1417				
.040		-.2697					
.045			-.2111				
.050	-.2422			-.2581	-.2493	-.2780	-.3700
.080				-.3693			
.085			-.3066				
.086		-.1434					
.094	-.2286						
.150				-.5207	-.5056	-.4953	-.5028
.163		.0000					
.177			-.3333				
.193		-.1614					
.229	-.1864						
.250				-.5802	-.6063	-.6020	-.5953
.274			-.3617				
.339		-.2687					
.362	-.0511						
.400				-.5765	-.6857		-.6934
.402			-.4481				
.497	.0000						
.550				-.5698	-.6710		
.565			.0000				
.600							-.6635
.650						-.6736	
.700	-.3965				-.2113		
.725				-.2689			
.750						-.6365	-.6331
.760			-.2701				
.775				-.2600	-.6154		
.808			-.1247				
.834	-.0371						
.850				-.2248	-.3337	-.5268	
.857			-.1186				
.865	-.0277						
.900	-.0564			-.1994			-.5003
.905			-.1064		-.1547		
.950				-.1732		-.4565	
.953			-.1302				
.965	-.1404						

ARC11-716 IA14 O1+T12+S12N25+AT10 UPPER WING (RB1U53)

ALPHAO(10) = 7.870 BETAO (6) = 4.060

SECTION (1)UPPER WING DEPENDENT VARIABLE CP

Y/BW	.2990	.3640	.4270	.5340	.6730	.7300	.8870
X/CW							
.000	-.3482	-.4467	-.0286	.4330	.5064	.5117	.4928
.020				-.1723	-.0596	-.1151	-.1904
.025			-.2026				
.040		-.2771					
.045			-.2311				
.050	-.2935			-.2904	-.2681	-.2800	-.3674
.080				-.3775			
.085			-.2611				
.086		-.1095					
.094	-.2621						
.150				-.4961	-.4971	-.4904	-.5009
.163		.0000					
.177			-.2776				
.193		-.1415					
.229	-.1303						
.250				-.4997	-.5900	-.5950	-.5929
.274			-.3212				
.339		-.2732					
.362	-.0319						
.400				-.5188	-.6609		-.6906
.402			-.4279				
.497	.0000						
.590				-.5070	-.6585		
.565			.0000				
.600							-.6607
.650						-.6669	
.700	-.3755				-.2078		
.725				-.2571			
.750						-.6167	-.6269
.760			-.2120				
.775				-.1914	-.3148		
.808			-.1030				
.834	-.0689						
.850				-.1266	-.1860	-.5304	
.857			-.1189				
.865	-.0541						
.900	-.0611			-.1114			-.5042
.905			-.1112		-.1503		
.950				-.1023		-.4933	
.953			-.1315				
.965	-.1339						

C-8

ARC11-716 IA14 O1+T12+S12N25+AT10 UPPER WING (RB1U33)

ALPHAO(10) = 7.970 BETAO (9) = 6.160

SECTION (1)UPPER WING DEPENDENT VARIABLE CP

X/CW \ Y/BW	.2990	.3640	.4270	.5340	.6730	.7800	.9873
.000	-.4498	-.2916	-.0988	.2542	.4950	.4595	.4642
.020				-.2040	-.0512	-.1257	-.1891
.025			-.1427				
.040		-.2279					
.045			-.1526				
.050	-.3704			-.2783	-.2626	-.2868	-.3664
.080				-.3473			
.085			-.1688				
.086		-.1837					
.094	-.3161						
.150				-.4483	-.5051	-.4931	-.4959
.163		.0000					
.177			-.2370				
.193		-.1602					
.229	-.1223						
.250				-.4717	-.5952	-.5941	-.5877
.274			-.2871				
.339		-.2694					
.362	-.0199						
.400				-.4948	-.6494		-.6860
.402			-.3759				
.497	.0000						
.550				-.4187	-.6146		
.585			.0000				
.600							-.6513
.650						-.6622	
.700	-.2617				-.2020		
.725				-.2476			
.750						-.5954	-.5900
.760			-.2396				
.775				-.1811	-.2712		
.800			-.1704				
.834	-.1260						
.850				-.1601	-.2311	-.5628	
.857			-.1752				
.865	-.1069						
.900	-.1137			-.1654			-.4707
.905			-.1614		-.1255		
.950				-.1673		-.3714	
.953			-.1736				
.965	-.1679						

ARC11-716 IA14 O1+T12+S12N25+AT10 UPPER WING (RB1U33)

ALPHAO(10) = 7.960 BETAO (10) = 8.110

SECTION (1)UPPER WING DEPENDENT VARIABLE CP

X/CW \ Y/BW	.2990	.3640	.4270	.5340	.6730	.7800	.8670
.000	-.5305	-.1757	-.0765	.0630	.4042	.4144	.4096
.020				-.2643	-.1025	-.1478	-.2149
.025			-.1063				
.040		-.1321					
.045			-.1105				
.050	-.4557			-.2978	-.2911	-.3008	-.3822
.080				-.3471			
.085			-.1501				
.086		-.1052					
.094	-.4084						
.150				-.3918	-.5077	-.5010	-.5049
.163		.0000					
.177			-.2295				
.193		-.1590					
.229	-.0467						
.250				-.4273	-.5792	-.5985	-.5989
.274			-.2074				
.339		-.2660					
.362	-.0033						
.400				-.4526	-.6069		-.6944
.402			-.3652				
.497	.0000						
.550				-.2849	-.5512		
.565			.0000				
.600							-.6547
.650						-.6577	
.700	-.1232				-.2116		
.725				-.2249			
.750						-.5936	-.5783
.760			-.2357				
.775				-.1964	-.2629		
.800			-.1929				
.834	-.1544						
.850				-.1892	-.1928	-.3159	
.857			-.2000				
.865	-.1300						
.900	-.1435			-.1911			-.4730
.905			-.1870		-.1073		
.950				-.1903		-.1254	
.953			-.1862				
.965	-.1090						

ARC11-716 IA14 O1+T12+S12N25+AT10 UPPER WING (RB1U33)

ALPHAO(10) = 7.960 BETAO (11) = 10.230

SECTION (1)UPPER WING DEPENDENT VARIABLE CP

Y/BW	.2990	.3640	.4270	.5340	.6730	.7800	.8870
X/CW							
.000	-.5280	-.1754	-.1285	-.0959	.2541	.3572	.3907
.020				-.3289	-.2020	-.1806	-.2274
.025			-.1230				
.040		-.1292					
.045			-.1373				
.050	-.4894			-.2903	-.3543	-.3272	-.3877
.060				-.3145			
.065			-.1679				
.086		-.1146					
.094	-.4992						
.150				-.3265	-.5200	-.5148	-.5066
.163		.0000					
.177			-.2490				
.193		-.1794					
.229	-.0794						
.250				-.3588	-.5576	-.6009	-.5949
.274			-.3203				
.339		-.2365					
.362	-.0215						
.400				-.3681	-.5689		-.6883
.402			-.3810				
.497	.0000						
.550				-.2304	-.3661		
.565			.0000				
.600							-.6463
.650						-.5072	
.700	-.0888				-.2148		
.725				-.2137			
.750						-.3445	-.5606
.760			-.2317				
.775				-.2048	-.1970		
.800			-.1753				
.834	-.1770						
.850				-.2080	-.1590	-.1980	
.857			-.1896				
.865	-.1519						
.900	-.1715			-.2056			-.4535
.905			-.1748		-.1207		
.950				-.1947		-.0404	
.953			-.1683				
.965	-.1973						

ARC11-716 IA14 O1+T12+S12N25+AT10 UPPER WING (RB1033)

ALPHAO(11) = 9.890 BETAO (1) = -9.960

SECTION (1)UPPER WING DEPENDENT VARIABLE CP

Y/BW	.2990	.3640	.4270	.5340	.6730	.7800	.8870
X/CW							
.000	.2005	.1088	.6593	.9136	.8295	.7271	.6646
.020				.0956	.0609	-.0911	-.1827
.025			.1052				
.040		.0919					
.045			-.0271				
.050	.0535			-.1434	-.2137	-.2789	-.3776
.080				-.3120			
.085			-.2317				
.086		.0953					
.094	.0278						
.150				-.5335	-.5207	-.5136	-.5251
.163		.0000					
.177			-.4202				
.193		-.1323					
.229	.0018						
.250				-.6489	-.6360	-.6319	-.6104
.274			-.4946				
.339		-.3492					
.362	.0788						
.400				-.6880	-.6593		-.6633
.402			-.5545				
.497	.0000						
.550				-.6982	-.6629		
.565			.0000				
.600							-.6774
.650						-.6299	
.700	-.4561				-.2505		
.725				-.6261			
.750						-.5362	-.6289
.760			-.3077				
.775				-.5986	-.5627		
.808			-.2097				
.834	-.2368						
.850				-.5402	-.5499	-.5222	
.857			-.2252				
.865	-.0627						
.900	.0257			-.4932			-.6104
.905			-.1897		-.5024		
.950				-.4434		-.4870	
.953			-.1654				
.965	-.0396						

ARC11-716 IA14 O1+T12+S12N25+AT10 UPPER WING (R81U33)

ALPHAO(11) = 9.930 BETAO (2) = -7.920

SECTION (1)UPPER WING DEPENDENT VARIABLE CP

Y/BW	.2990	.3640	.4270	.5340	.6730	.7800	.8870
X/CW							
.000	.1493	.0381	.6087	.8845	.8032	.6952	.6326
.020				.0670	.0454	-.1094	-.2063
.025			.0660				
.040		.0218					
.045			-.0614				
.050	.0073			-.1616	-.2263	-.2941	-.3948
.080				-.3268			
.085			-.2578				
.086		.0453					
.094	-.0118						
.150				-.5453	-.5294	-.5224	-.5388
.163		.0000					
.177			-.4412				
.193		-.1692					
.229	-.0413						
.250				-.6439	-.6418	-.6390	-.6206
.274			-.5109				
.339		-.3622					
.362	.0322						
.400				-.6862	-.6715		-.6693
.402			-.5635				
.497	.0000						
.550				-.6930	-.6689		
.585			.0000				
.600							-.6852
.650						-.6429	
.700	-.4676				-.2429		
.725				-.6306			
.750						-.5499	-.6295
.760			-.2939				
.775				-.5948	-.5803		
.808			-.2721				
.834	-.1792						
.850				-.5413	-.5599	-.5331	
.857			-.2279				
.865	-.0273						
.900	.0137			-.4784			-.6013
.905			-.1755		-.4958		
.950				-.4109		-.4933	
.953			-.1497				
.985	-.0636						

ARC11-716 IA14 O1+T12+S12N25+AT10 UPPER WING (RB1U33)

ALPHAD(11) = 9.940 BETAD (3) = -6.010

SECTION (1)UPPER WING DEPENDENT VARIABLE CP

Y/BW	.2990	.3640	.4270	.5340	.6730	.7800	.8870
X/CW							
.000	.1006	-.0289	.5419	.8474	.7734	.6667	.5944
.020				.0408	.0278	-.1301	-.2366
.025			.0283				
.040		-.0380					
.045			-.0931				
.050	-.0381			-.1793	-.2382	-.3089	-.4184
.080				-.3406			
.085			-.2793				
.086		-.0136					
.094	-.0532						
.150				-.5548	-.5381	-.5352	-.5551
.163		.0000					
.177			-.4579				
.193		-.2013					
.229	-.0789						
.250				-.6510	-.6519	-.6480	-.6348
.274			-.5167				
.339		-.3825					
.362	-.0211						
.400				-.6947	-.6834		-.6810
.402			-.5697				
.497	.0000						
.550				-.7027	-.6782		
.565			.0000				
.600							-.6900
.650						-.6618	
.700	-.4707				-.2393		
.725				-.6294			
.750						-.5662	-.6438
.760			-.2946				
.775				-.5855	-.5945		
.808			-.2809				
.834	-.1333						
.850				-.5223	-.5642	-.5451	
.857			-.2158				
.865	-.0154						
.900	.0021			-.4480			-.6102
.905			-.1521		-.4982		
.950				-.3518		-.4944	
.953			-.1281				
.965	-.0781						

DATE 19 JAN 75 TABULATED PRESSURE DATA - IA14A - VOL. 6

ARC11-716 IA14 O1+T12+S12N25+AT10 UPPER WING (RB1U33)

ALPHAO(11) = 9.690 BETAO (4) = -3.990

SECTION (1)UPPER WING DEPENDENT VARIABLE CP

Y/BW	.2990	.3640	.4270	.5340	.6730	.7800	.8870
X/CW							
.000	.0232	-.1215	.4534	.7846	.7300	.6307	.5631
.020				-.0051	.0070	-.1430	-.2525
.025			-.0271				
.040		-.1106					
.045			-.1487				
.050	-.0899			-.2142	-.2532	-.3211	-.4268
.080				-.3666			
.085			-.3174				
.086		-.0786					
.094	-.1001						
.150				-.5669	-.5463	-.5426	-.5620
.163		.0000					
.177			-.4798				
.193		-.2387					
.229	-.1216						
.250				-.6556	-.6558	-.6518	-.6415
.274			-.5214				
.339		-.3798					
.362	-.0827						
.400				-.7046	-.6941		-.6876
.402			-.5458				
.497	.0000						
.550				-.6943	-.6858		
.565			.0000				
.600							-.6940
.650						-.6786	
.700	-.4590				-.2276		
.725				-.5545			
.750						-.5616	-.6417
.760			-.3034				
.775				-.5364	-.5990		
.808			-.2509				
.834	-.0718						
.850				-.4291	-.5661	-.5520	
.857			-.1029				
.865	.0067						
.900	.0051			-.2839			-.6045
.905			-.1301		-.5051		
.950				-.1507		-.4862	
.953			-.1037				
.965	-.0941						

ARC11-716 IA14 O1+T12+S12N25+AT10 UPPER WING (RB1U33)

ALPHAO(11) = 9.900 BETAO (5) = -1.980

SECTION (1)UPPER WING DEPENDENT VARIABLE CP

Y/BW	.2990	.3640	.4270	.5340	.6730	.7800	.8870
X/CW							
.000	-.0621	-.2252	.3302	.7131	.6822	.5915	.5243
.020				-.0754	-.0281	-.1675	-.2773
.025			-.1111				
.040		-.1900					
.045			-.2214				
.050	-.1373			-.2679	-.2811	-.3394	-.4465
.080				-.4037			
.085			-.3650				
.086		-.1364					
.094	-.1518						
.150				-.5856	-.5597	-.5545	-.5762
.163		.0000					
.177			-.4624				
.193		-.2800					
.229	-.1627						
.250				-.6878	-.6633	-.6598	-.6535
.274			-.4722				
.339		-.3640					
.362	-.1103						
.400				-.7368	-.7110		-.7000
.402			-.5357				
.497	.0000						
.550				-.7370	-.7027		
.565			.0000				
.600							-.7003
.650						-.7022	
.700	-.4340				-.2237		
.725				-.4565			
.750						-.6008	-.6535
.760			-.3346				
.775				-.3262	-.6236		
.808			-.2378				
.834	-.0509						
.850				-.2193	-.6038	-.5662	
.857			-.1818				
.865	.0016						
.900	-.0113			-.1865			-.6127
.935			-.1145		-.5084		
.950				-.1526		-.4796	
.953			-.0912				
.965	-.1186						

ARC11-716 IA14 O1+T12+S12N25+AT10 UPPER WING (RB1U33)

ALPHAO(11) = 9.910 BETAO (6) = .020

SECTION (1)UPPER WING DEPENDENT VARIABLE CP

X/CW \ Y/BW	.2990	.3640	.4270	.5340	.6730	.7800	.8670
.000	-.1645	-.3689	.2005	.6203	.6233	.5527	.4920
.020				-.1382	-.0583	-.1840	-.2914
.025			-.1954				
.040		-.2743					
.045			-.2928				
.050	-.1962			-.3071	-.3023	-.3501	-.4564
.080				-.4269			
.085			-.3769				
.086		-.1932					
.094	-.1967						
.150				-.5890	-.5659	-.5596	-.5794
.163		.0000					
.177			-.4400				
.193		-.2462					
.229	-.1928						
.250				-.6882	-.6647	-.6617	-.6564
.274			-.4593				
.339		-.3324					
.362	-.0980						
.400				-.7268	-.7166		-.7171
.402			-.4834				
.497	.0000						
.550				-.6026	-.7030		
.565			.0000				
.600							-.7115
.650						-.7161	
.700	-.4281				-.2205		
.725				-.3062			
.750						-.6272	-.6651
.760			-.3252				
.775				-.2509	-.6350		
.808			-.1884				
.834	-.0335						
.850				-.2546	-.6016	-.5801	
.857			-.1630				
.865	.0014						
.900	-.0402			-.2315			-.5935
.905			-.1291		-.4869		
.950				-.1950		-.4884	
.953			-.1340				
.965	-.1306						

ARC11-716 IA14 O1+T12+S12N25+AT10 UPPER WING (RB1U33)

ALPHAO(11) = 9.900 BETAO (7) = 2.040

SECTION (1)UPPER WING DEPENDENT VARIABLE CP

Y/BW	.2990	.3640	.4270	.5340	.6730	.7800	.8870
X/CW							
.000	-.2543	-.5361	.0575	.5342	.5687	.5140	.4649
.020				-.1781	-.0821	-.1914	-.2996
.025			-.2219				
.040		-.3520					
.045			-.2849				
.050	-.2499			-.3255	-.3168	-.3524	-.4587
.080				-.4312			
.085			-.3730				
.086		-.2329					
.094	-.2303						
.150				-.5807	-.5634	-.5539	-.5791
.163		.0000					
.177			-.3975				
.193		-.2100					
.229	-.2082						
.250				-.6158	-.6521	-.6541	-.6551
.274			-.3970				
.339		-.2914					
.362	-.0871						
.400				-.5911	-.7199		-.7075
.402			-.4605				
.497	.0000						
.550				-.5546	-.6930		
.565			.0000				
.600							-.7080
.650						-.7063	
.700	-.4173				-.2200		
.725				-.2765			
.750						-.6200	-.6407
.760			-.2919				
.775				-.2599	-.5882		
.808			-.1577				
.834	-.0479						
.850				-.2301	-.5574	-.5591	
.857			-.1938				
.865	-.0367						
.900	-.0686			-.1974			-.5530
.905			-.1406		-.3509		
.950				-.1572		-.4814	
.955			-.1652				
.965	-.1480						

ARC11-716 IA14 O1+T12+S12N25+AT10 UPPER WING (RB1U33)

ALPHAO(11) = 9.900 BETAO (8) = 4.130

SECTION (1)UPPER WING DEPENDENT VARIABLE CP

Y/BW	.2990	.3640	.4270	.5340	.6730	.7800	.8870
X/CW							
.000	-.3508	-.5131	-.0781	.4016	.5245	.5128	.4679
.020				-.2417	-.1010	-.1849	-.2852
.025			-.2620				
.040		-.3443					
.045			-.2929				
.050	-.3070			-.3604	-.3219	-.3446	-.4460
.060				-.4434			
.065			-.3156				
.086		-.2365					
.094	-.2657						
.150				-.5453	-.5507	-.5456	-.5684
.163		.0000					
.177			-.3059				
.193		-.1751					
.229	-.1869						
.250				-.5787	-.6376	-.6462	-.6474
.274			-.3533				
.339		-.2961					
.362	-.0543						
.400				-.5755	-.7093		-.7229
.402			-.4469				
.497	.0000						
.550				-.5637	-.6960		
.565			.0000				
.600							-.7016
.650						-.7057	
.700	-.4009				-.2178		
.725				-.3108			
.750						-.6374	-.6459
.760			-.2321				
.775				-.2591	-.4868		
.808			-.1340				
.834	-.0850						
.850				-.1926	-.2254	-.5690	
.857			-.1440				
.865	-.0725						
.900	-.0808			-.1732			-.5430
.905			-.1383		-.1655		
.950				-.1585		-.5406	
.953			-.1639				
.965	-.1903						

ARC11-716 IA14 O1+T12+S12N25+AT10 UPPER WING (RB1U33)

ALPHAO(11) = 9.880 BETAO (9) = 6.100

SECTION (1)UPPER WING DEPENDENT VARIABLE CP

Y/BW	.2990	.3640	.4270	.5340	.6730	.7800	.8870
X/CW							
.000	-.4336	-.3296	-.1328	.2509	.4906	.4743	.4469
.020				-.2724	-.0982	-.1834	-.2802
.025			-.1762				
.040		-.2531					
.045			-.1820				
.050	-.3692			-.3365	-.3149	-.3414	-.4433
.080				-.4063			
.085			-.2028				
.086		-.2055					
.094	-.3236						
.150				-.4980	-.5485	-.5419	-.5618
.163		.0000					
.177			-.2587				
.193		-.1795					
.229	-.1492						
.250				-.4850	-.6340	-.6404	-.6436
.274			-.3164				
.339		-.2967					
.362	-.0307						
.400				-.4995	-.6971		-.7208
.402			-.4060				
.497	.0000						
.550				-.3878	-.6713		
.565			.0000				
.600							-.6926
.650						-.6994	
.700	-.2533				-.2090		
.725				-.2482			
.750						-.6292	-.6262
.760			-.2485				
.775				-.1943	-.3060		
.808			-.2028				
.834	-.1445						
.850				-.1746	-.2653	-.5980	
.857			-.1989				
.865	-.1173						
.900	-.1232			-.1715			-.5287
.905			-.1873		-.1662		
.950				-.1689		-.5144	
.953			-.1974				
.955	-.1738						

ARC11-716 IA14 O1+T12+S12N25+AT10 UPPER WING (RB1U3J)

ALPHAO(11) = 9.870 BETAO (10) = 8.110

SECTION (1)UPPER WING DEPENDENT VARIABLE CP

Y/BW	.2990	.3640	.4270	.5340	.6730	.7800	.8870
X/CW							
.000	-.5123	-.2086	-.1382	.0444	.4410	.4252	.3994
.020				-.3539	-.1338	-.2013	-.2953
.025			-.1374				
.040		-.1688					
.045			-.1551				
.050	-.4492			-.3715	-.3434	-.3542	-.4520
.080				-.4121			
.085			-.1892				
.086		-.1433					
.094	-.4077						
.150				-.4558	-.5565	-.5479	-.5687
.163		.0000					
.177			-.2496				
.193		-.1964					
.229	-.1173						
.250				-.4339	-.6345	-.6446	-.6472
.274			-.3078				
.339		-.2963					
.362	-.0306						
.400				-.4460	-.6736		-.7143
.402			-.3794				
.497	.0000						
.550				-.2817	-.5878		
.565			.0000				
.600							-.6876
.650						-.6974	
.700	-.1320				-.2198		
.725				-.2319			
.750						-.6230	-.6121
.760			-.2550				
.775				-.2037	-.3061		
.808			-.2233				
.834	-.1772						
.850				-.1978	-.2391	-.5445	
.857			-.2209				
.865	-.1533						
.900	-.1639			-.1975			-.5468
.905			-.2124		-.1242		
.950				-.1918		-.2275	
.953			-.2057				
.965	-.2003						

ARC11-716 IA14 O1+T12+S12N25+AT10 UPPER WING (RB1U33)

ALPHAO(11) = 10.000 BETAO (11) = 10.190

SECTION (1)UPPER WING DEPENDENT VARIABLE CP

Y/BW	.2990	.3640	.4270	.5340	.6730	.7600	.8670
X/CW							
.000	-.4970	-.1866	-.1681	-.0911	.3537	.3960	.3930
.020				-.4228	-.1869	-.2062	-.2933
.025			-.1603				
.040		-.1553					
.045			-.1759				
.050	-.4808			-.3603	-.3794	-.3540	-.4453
.080				-.3727			
.085			-.2013				
.086		-.1381					
.094	-.4776						
.150				-.3610	-.5697	-.5432	-.5567
.163		.0000					
.177			-.2681				
.193		-.2314					
.229	-.1956						
.250				-.3734	-.6277	-.6372	-.6373
.274			-.3227				
.339		-.2800					
.362	-.0505						
.400				-.3435	-.6050		-.7016
.402			-.3858				
.497	.0000						
.550				-.2305	-.3750		
.565			.0000				
.600							-.6709
.650						-.6198	
.700	-.0943				-.2194		
.725				-.2313			
.750						-.4838	-.5946
.760			-.2442				
.775				-.2261	-.2376		
.808			-.2115				
.834	-.1932						
.850				-.2243	-.1999	-.2377	
.857			-.2122				
.865	-.1673						
.900	-.1774			-.2174			-.5022
.905			-.1938		-.1433		
.950				-.2058		-.0614	
.953			-.1806				
.965	-.1829						

ARC11-716 IA14 O1+T12+S12N25+AT11 UPPER WING (RB1U34) (15 FEB 74)

REFERENCE DATA

SREF = 2.4210 SQ.FT. XMRP = 29.5000 INCHES
LREF = 38.7090 INCHES YMRP = .0000 INCHES
BREF = 38.7090 INCHES ZMRP = .0000 INCHES
SCALE = .0300 SCALE

PARAMETRIC DATA

MACH = .600 ELEVON = .000
RUDDER = .000 SPOBRK = .000

ALPHAO(1) = -8.010 BETAO (1) = -7.990

SECTION (*)UPPER WING DEPENDENT VARIABLE CP

Y/BW	.2990	.3640	.4270	.5340	.6730	.7800	.8870
X/CW							
.000	.0311	.0087	.1878	.1351	-.0490	-.2125	-.1228
.020				.4748	.4641	.4915	.4673
.025			.3582				
.040		.1855					
.045			.2874				
.050	.0823			.2630	.2925	.3052	.2749
.080				.0956			
.085			.1488				
.086		.2468					
.094	.0877						
.150				-.1163	-.0842	-.0647	-.0572
.163		.0000					
.177			-.0520				
.193		.1085					
.229	.1382						
.250				-.1495	-.2310	-.2591	-.2764
.274			-.1415				
.339		-.1107					
.362	.0796						
.400				-.1082	-.2253		-.2458
.402			-.1531				
.497	.0000						
.550				-.0382	-.1415		
.565			.0000				
.600							-.1634
.650						-.1161	
.700	.0449				-.1477		
.725				.0225			
.750						.0661	.0293
.760			-.0353				
.775				.1340	.0752		
.800			.0926				
.834	.0273						
.850				.1185	.0965	.1018	
.857			.0700				
.865	.1076						
.900	.0683			.1253			.0944
.905			.0607		.1059		

ARC11-716 IA14 O1+T12+S12N25+AT11 UPPER WING (RB1U34)

ALPHAO(1) = -8.010 BETAO (1) = -7.980

SECTION (1)UPPER WING DEPENDENT VARIABLE CP

Y/BW	.2990	.3640	.4270	.5340	.6730	.7800	.8870
X/CW							
.950				.1115		.1055	
.953			.0380				
.965	-.0093						

ALPHAO(1) = -7.990 BETAO (2) = -3.980

SECTION (1)UPPER WING DEPENDENT VARIABLE CP

Y/BW	.2990	.3640	.4270	.5340	.6730	.7800	.8870
X/CW							
.000	-.0073	-.0472	.0929	-.0125	-.2303	-.3671	-.2507
.020				.4606	.4314	.4528	.4106
.025			.3338				
.040		.1380					
.045			.2851				
.050	.0474			.2712	.2971	3041	.2599
.080				.1229			
.085			.1746				
.086		.2177					
.094	.0540						
.150				-.0826	-.0576	-.0347	-.0484
.163		.0000					
.177			-.0318				
.193		.1169					
.229	.1219						
.250				-.1448	-.2192	-.2271	-.2520
.274			-.1212				
.339		-.1090					
.362	.0623						
.400				-.1339	-.2264		-.2508
.492			-.1606				
.497	.0000						
.550				-.0796	-.1535		
.565			.0000				
.600							-.1738
.650						-.1250	
.700	.0004				-.1347		
.725				-.0170			
.750						.0556	.0206
.760			-.0605				
.775				.0867	.0565		
.808			.0605				
.834	-.0040						
.850				.0850	.0834	.0933	

DATE 10 JAN 75 TABULATED PRESSURE DATA - IA14A - VOL. 6 (RB1U34)

ARC11-716 IA14 O1+T12+S12N25+AT11 UPPER WING

ALPHAO(1) = -7.990 BETAO (2) = -3.980

SECTION (1)UPPER WING DEPENDENT VARIABLE CP

Y/BW	.2990	.3640	.4270	.5340	.6730	.7800	.8870
X/CW							
.857			.0432				
.865	.0684						
.900	.0419			.0993			.0808
.905			.0429		.0912		
.950				.0895		.1010	
.953			.0207				
.965	-.0275						

ALPHAO(1) = -7.990 BETAO (3) = .030

SECTION (1)UPPER WING DEPENDENT VARIABLE CP

Y/BW	.2990	.3640	.4270	.5340	.6730	.7800	.8870
X/CW							
.000	-.0292	-.0579	.0382	-.1333	-.3893	-.5345	-.3763
.020				.4264	.3775	.3955	.3457
.025			.2955				
.040		.1011					
.045			.2619				
.050	.0155			.2704	.2795	.2826	.2283
.080				.1320			
.085			.1712				
.086		.1874					
.094	.0282						
.150				-.0651	-.0433	-.0228	-.0501
.163		.0000					
.177			-.0145				
.193		.1201					
.229	.1000						
.250				-.1427	-.2059	-.2133	-.2440
.274			-.1152				
.339		-.1022					
.362	.0787						
.400				-.1407	-.2372		-.2526
.402			-.1714				
.497	.0000						
.550				-.0933	-.1746		
.565			.0000				
.600							-.1816
.650						-.1398	
.700	-.0374				-.1407		
.725				-.0291			
.750						.0345	.0073
.760			-.0888				

DATE 10 JAN 75 TABULATED PRESSURE DATA - IA14A - VOL. 6 (RB1U34)

ARC11-716 IA14 O1+T12+S12N25^AT11 UPPER WING

ALPHAO(1) = -7.990 BETAO (3) = .030

SECTION (1)UPPER WING DEPENDENT VARIABLE CP

Y/BW	.2990	.3640	.4270	.5340	.6730	.7800	.8870
X/CW							
.775				.0712	.0344		
.808			.0297				
.834	-.0398						
.850				.0712	.0650	.0777	
.857			.0200				
.865	.0335						
.900	.0093			.0856			.0675
.905			.0161		.0759		
.950				.0758		.0901	
.953			-.0066				
.965	-.0493						

ALPHAO(1) = -8.000 BETAO (4) = 4.090

SECTION (1)UPPER WING DEPENDENT VARIABLE CP

Y/BW	.2990	.3640	.4270	.5340	.6730	.7800	.8870
X/CW							
.000	-.0377	-.0364	.0038	-.2154	-.5133	-.6423	-.4748
.020				.3766	.3179	.3280	.2730
.025			.2503				
.040		.0720					
.045			.2307				
.050	-.0072			.2429	.2465	.2420	.1818
.080				.1292			
.085			.1599				
.086		.1605					
.094	.0059						
.150				-.0630	-.0475	-.0286	-.0709
.163		.0000					
.177			.0003				
.193		.1102					
.229	.0859						
.250				-.1890	-.2007	-.2160	-.2518
.274			-.1183				
.339		-.1055					
.362	.0737						
.400				-.1994	-.2495		-.2652
.402			-.1957				
.497	.0000						
.550				-.1717	-.1951		
.565			.0000				
.600							-.1982
.650						-.1630	

ARC11-716 IA14 O1+T12+S12N25+AT11 UPPER WING (RB1U34)

ALPHAO(1) = -8.000 BETAO (4) = 4.090

SECTION (1)UPPER WING DEPENDENT VARIABLE CP

X/CW \ Y/BW	.2990	.3640	.4270	.5340	.6730	.7800	.8870
.700	-.0829				-.1576		
.725				-.1048			
.750						.0167	-.0132
.760			-.1231				
.775				.0039	.0090		
.808			.0009				
.834	-.0782						
.850				.0060	.0431	.0581	
.857			-.0106				
.865	.0014						
.900	-.0164			.0235			.0545
.905			-.0082		.0575		
.950				.0102		.0737	
.953			-.0270				
.965	-.0621						

ALPHAO(1) = -8.020 BETAO (5) = 8.130

SECTION (1)UPPER WING DEPENDENT VARIABLE CP

X/CW \ Y/BW	.2990	.3640	.4270	.5340	.6730	.7800	.8870
.000	-.0682	-.0398	-.0151	-.2665	-.5988	-.7477	-.5930
.020				.3346	.2568	.2628	.2045
.025			.2115				
.040		.0442					
.045			.2092				
.050	-.0338			.2202	.2129	.2077	.1474
.080				.1199			
.085			.1463				
.086		.1281					
.094	-.0204						
.150				-.0659	-.0527	-.0317	-.0793
.163		.0000					
.177			-.0071				
.193		.0986					
.229	.0631						
.250				-.1923	-.2015	-.2024	-.2401
.274			-.1274				
.339		-.1181					
.362	.0599						
.490				-.2185	-.2487		-.2652
.492			-.2209				
.497	.0000						

ARC11-716 IA14 O1+T12+S12N25+AT11 UPPER WING (RB1U34)

ALPHAO(1) = -8.020 BETAO (5) = 8.130

SECTION (1)UPPER WING DEPENDENT VARIABLE CP

Y/BW	.2990	.3640	.4270	.5340	.6730	.7800	.8870
X/CW							
.550				-.1912	-.2128		
.565			.0000				
.600							-.1997
.650						-.1742	
.700	-.1239				-.1707		
.725				-.1249			
.750						.0063	-.0152
.760			-.1464				
.775				-.0189	-.0026		
.808			-.0216				
.834	-.0965						
.850				-.0050	.0283	.0531	
.857			-.0315				
.865	-.0177						
.900	-.0296			.0087			.0523
.905			-.0292		.0506		
.950				.0030		.0623	
.953			-.0390				
.965	-.0790						

ALPHAO(2) = -4.050 BETAO (1) = -8.030

SECTION (1)UPPER WING DEPENDENT VARIABLE CP

Y/BW	.2990	.3640	.4270	.5340	.6730	.7800	.8870
X/CW							
.000	.0647	.1135	.3475	.4204	.3517	.2644	.2801
.020				.2942	.2881	.3064	.3161
.025			.2491				
.040		.1896					
.045			.1311				
.050	.0490			.0329	.0320	.0454	.0336
.080				-.1485			
.085			-.0327				
.086		.1902					
.094	.0465						
.150				-.3211	-.3284	-.3148	-.2721
.163		.0000					
.177			-.2211				
.193		-.0247					
.229	.0097						
.250				-.3202	-.4211	-.4596	-.4702
.274			-.2652				
.339		-.2372					

ARC11-716 IA14 O1+T12+S12N25+AT11 UPPER WING (RB1U34)

ALPHAO(2) = -4.050 BETAO (1) = -8.030

SECTION (1)UPPER WING DEPENDENT VARIABLE CP

Y/BW	.2990	.3640	.4270	.5340	.6730	.7800	.8870
X/CW							
.362	-.0218						
.400				-.2086	-.3299		-.3537
.402			-.2304				
.497	.0000						
.550				-.0991	-.1920		
.565			.0000				
.600							-.2047
.650						-.1396	
.700	.0061				-.1416		
.725				-.0051			
.750						.0510	.0017
.760			-.0306				
.775				.1030	.0618		
.808			.0861				
.834	.0197						
.850				.0970	.0900	.0972	
.857			.0709				
.865	.1001						
.900	.0721			.1085			.0955
.905			.0620		.1007		
.950				.1030		.1057	
.953			.0455				
.965	-.0002						

ALPHAO(2) = -4.050 BETAO (2) = -4.000

SECTION (1)UPPER WING DEPENDENT VARIABLE CP

Y/BW	.2990	.3640	.4270	.5340	.6730	.7800	.8970
X/CW							
.000	.0181	.0703	.2851	.3233	.2207	.1180	.1462
.020				.2995	.2801	.3044	.2981
.025			.2361				
.040		.1587					
.045			.1510				
.050	.0117			.0589	.0573	.0673	.0443
.080				-.1041			
.085			-.0020				
.086		.1755					
.094	.0173						
.150				-.2901	-.2868	-.2738	-.2560
.163		.0000					
.177			-.1960				
.193		-.0097					

ARC11-716 IA14 01+T12+S12N25+AT11 UPPER WING (RB1U34)

ALPHAO(2) = -4.050 BETAO (2) = -4.000

SECTION (1)UPPER WING DEPENDENT VARIABLE CP

X/CW \ Y/BW	.2990	.3640	.4270	.5340	.6730	.7800	.8870
.229	.0724						
.250				-.3317	-.3941	-.4178	-.4367
.274			-.2533				
.339		-.2295					
.352	-.0152						
.400				-.2520	-.3280		-.3456
.402			-.2518				
.497	.0000						
.550				-.1466	-.2071		
.565			.0000				
.600							-.2088
.650						-.1520	
.700	-.0352				-.1303		
.725				-.0502			
.750						.0372	-.0016
.760			-.0653				
.775				.0595	.0426		
.808			.0544				
.834	-.0199						
.850				.0653	.0725	.0850	
.857			.0390				
.865	.0564						
.900	.0309			.0770			.0872
.905			.0408		.0904		
.950				.0732		.0970	
.953			.0328				
.965	-.0235						

ALPHAO(2) = -4.050 BETAO (3) = .040

SECTION (1)UPPER WING DEPENDENT VARIABLE CP

X/CW \ Y/BW	.2990	.3640	.4270	.5340	.6730	.7800	.8870
.000	-.0215	.0407	.2217	.2116	.0770	-.0456	.0016
.020				.3012	.2695	.2928	.2744
.025			.2208				
.040		.1286					
.045			.1560				
.050	-.0173			.0852	.0955	.0921	.0542
.080				-.0864			
.085			.0222				
.086		.1560					
.094	-.0055						

ARC11-716 IA14 O1+T12+S12N25+AT11 UPPER WING (RB1U34)

ALPHAO(2) = -4.050 BETAO (3) = .040

SECTION (1)UPPER WING DEPENDENT VARIABLE CP

Y/BW	.2990	.3640	.4270	.5340	.6730	.7800	.8870
X/CW							
.150				-.2499	-.2409	-.2287	-.2325
.163		.0000					
.177			-.1605				
.193		.0067					
.229	.0575						
.250				-.2812	-.3676	-.3865	-.4079
.274			-.2367				
.339		-.2071					
.362	-.0115						
.400				-.2278	-.3300		-.3314
.402			-.2556				
.497	.0000						
.550				-.1410	-.2213		
.565			.0000				
.600							-.2079
.650						-.1637	
.700	-.0740				-.1355		
.725				-.0472			
.750						.0247	-.0073
.760			-.0888				
.775				.0571	.0243		
.808			.0267				
.834	-.0487						
.850				.0630	.0596	.0756	
.857			.0118				
.865	.0218						
.900	.0040			.0809			.0794
.905			.0154		.0811		
.950				.0812		.0918	
.953			.0040				
.965	-.0466						

ALPHAO(2) = -4.080 BETAO (4) = 4.070

SECTION (1)UPPER WING DEPENDENT VARIABLE CP

Y/BW	.2990	.3640	.4270	.5340	.6730	.7800	.8870
X/CW							
.000	-.0623	.0200	.1761	.1402	-.0173	-.1397	-.0062
.020				.2722	.2263	.2475	.2253
.025			.1838				
.040		.0045					
.045			.1268				
.050	-.0395			.0797	.0746	.0722	.0249

ARC11-716 IA14 O1+T12+S12N25+AT11 UPPER WING (R81U34)

ALPHAO(2) = -4.060 BETAO (4) = 4.070

SECTION (1)UPPER WING DEPENDENT VARIABLE CP

Y/BW	.2990	.3640	.4270	.5340	.6730	.7800	.8870
X/CW							
.080				-.0570			
.085			.0144				
.086		.1195					
.094	-.0219						
.150				-.2383	-.2338	-.2221	-.2288
.163		.0000					
.177			-.1498				
.193		.0013					
.229	.0440						
.250				-.3270	-.3621	-.3844	-.3957
.274			-.2353				
.339		-.2082					
.362	-.0103						
.400				-.2880	-.3484		-.3438
.402			-.2814				
.497	.0000						
.550				-.2199	-.2463		
.565			.0000				
.600							-.2173
.650						-.1833	
.700	-.1176				-.1573		
.725				-.1170			
.750						.0050	-.0210
.760			-.1297				
.775				-.0117	-.0051		
.808			-.0200				
.834	-.0092						
.850				-.0036	.0328	.0539	
.857			-.0145				
.865	-.0216						
.900	-.0305			.0205			.0666
.905			-.0133		.0587		
.950				.0187		.0737	
.953			-.0235				
.965	-.0675						

ARC11-716 IA14 O1+T12+S12N25+AT11 UPPER WING (RB1U34)

ALPHAO(2) = -4.000 BETAO (5) = 8.090

SECTION (1)UPPER WING DEPENDENT VARIABLE CP

Y/BW	.2990	.3640	.4270	.5340	.6730	.7800	.8870
X/CW							
.000	-.1115	-.0124	.0548	.0982	-.1059	-.2440	-.2046
.020				.2450	.1960	.2164	.1844
.025			.1493				
.040		.0270					
.045			.1234				
.050	-.0752			.0797	.0702	.0681	.0248
.080				-.0432			
.085			.0393				
.086		.0846					
.094	-.0508						
.150				-.2106	-.2213	-.1989	-.2192
.163		.0000					
.177			-.1309				
.193		.0110					
.229	.0304						
.250				-.3020	-.3417	-.3522	-.3657
.274			-.2277				
.339		-.2084					
.362	-.0089						
.400				-.2955	-.3400		-.3364
.402			-.2947				
.497	.0000						
.550				-.2378	-.2575		
.565			.0000				
.600							-.2172
.650						-.1908	
.700	-.1542				-.1753		
.725				-.1348			
.750						-.0112	-.0247
.760			-.1545				
.775				-.0386	-.0205		
.800			-.0376				
.834	-.1046						
.850				-.0189	.0206	.0444	
.857			-.0360				
.865	-.0401						
.900	-.0413			-.0025			.0620
.905			-.0312		.0468		
.950				-.0004		.0669	
.953			-.0336				
.965	-.0088						

ARC11-716 IA14 O1+T12+S12N25 AT11 UPPER WING (RB1U34)

ALPHAO(3) = -.310 BETAO (1) = -8.030

SECTION (1)UPPER WING DEPENDENT VARIABLE CP

Y/BW	.2990	.3640	.4270	.5340	.6730	.7800	.8870
X/CW							
.000	.0517	.1177	.3808	.5446	.5264	.4912	.5144
.020				.0376	-.0027	-.0202	-.0246
.025			.0741				
.040		.1420					
.045			-.0590				
.050	.0003			-.2469	-.2928	-.2926	-.3304
.080				-.4207			
.085			-.2421				
.086		.1037					
.094	.0064						
.150				-.5344	-.5776	-.5742	-.5333
.163		.0000					
.177			-.3980				
.193		-.1648					
.229	.0388						
.250				-.5134	-.6037	-.6604	-.6809
.274			-.3975				
.339		-.3524					
.362	-.1115						
.400				-.5124	-.4037		-.4839
.402			-.3050				
.497	.0000						
.550				-.1494	-.2177		
.565			.0000				
.600							-.2431
.650						-.1511	
.700	-.0146				-.1399		
.725				-.0290			
.750						.0447	-.0135
.760			-.0237				
.775				.0842	.0606		
.808			.0802				
.834	.0244						
.850				.0815	.0957	.1023	
.857			.0749				
.865	.1037						
.900	.0791			.0974			.0951
.905			.0705		.1116		
.950				.0886		.1187	
.953			.0522				
.965	.0183						

DATE 10 JAN 75 TABULATED PRESSURE DATA - IA14A - VOL. 6

ARC11-716 IA14 O1+T12+S12N25+AT11 UPPER WING (RB1U34)

ALPHAO(3) = -.320 BETAO (2) = -4.010

SECTION (1)UPPER WING DEPENDENT VARIABLE CP

Y/BW	.2990	.3640	.4270	.5340	.6730	.7800	.8870
X/CW							
.000	.0013	.0772	.3352	.4801	.4499	.4071	.4317
.020				.0802	.0300	.0239	.0046
.025			.0931				
.040		.1208					
.045			-.0270				
.050	-.0337			-.1889	-.2321	-.2449	-.2875
.080				-.3531			
.085			-.1926				
.086		.1033					
.094	-.0227						
.150				-.4928	-.5284	-.5359	-.4947
.163		.0000					
.177			-.3639				
.193		-.1347					
.229	.0276						
.250				-.4967	-.5828	-.6264	-.6435
.274			-.3810				
.339		-.3476					
.362	-.1027						
.400				-.3391	-.4200		-.4505
.402			-.3278				
.497	.0000						
.550				-.1359	-.2440		
.565			.0000				
.600							-.2435
.650						-.1703	
.700	-.0648				-.1364		
.725				-.0666			
.750						.0292	-.0180
.760			-.0643				
.775				.0452	.0353		
.800			.0471				
.834	-.0218						
.850				.0503	.0720	.0062	
.857			.0446				
.865	.0545						
.900	.0394			.0666			.0090
.905			.0455		.0988		
.950				.0690		.1045	
.953			.0422				
.965	-.0147						

ARC11-716 IA14 O1+T12+S12N25+AT11 UPPER WING (RB1U34)

ALPHAO(3) = -.320 BETAO (3) = .030

SECTION (1)UPPER WING DEPENDENT VARIABLE CP

Y/BW	.2990	.3640	.4270	.5340	.6730	.7800	.8870
X/CW							
.000	-.0499	.0406	.2814	.4017	.3552	.3088	.3423
.020				.1067	.0536	.0441	.0210
.025			.0960				
.040		.0358					
.045			-.0098				
.050	-.0546			-.1434	-.1817	-.2016	-.2468
.080				-.2967			
.085			-.1590				
.086		.0958					
.094	-.0386						
.150				-.4393	-.4633	-.4764	-.4502
.163		.0000					
.177			-.3213				
.193		-.1171					
.229	.0203						
.250				-.4560	-.5282	-.5201	-.5951
.274			-.3585				
.339		-.3248					
.362	-.0921						
.400				-.3303	-.4145		-.4091
.402			-.3335				
.497	.0000						
.550				-.2049	-.2572		
.565			.0000				
.600							-.2338
.650						-.1792	
.700	-.1011				-.1308		
.725				-.0777			
.750						.0208	-.0144
.760			-.0911				
.775				.0303	.0204		
.808			.0182				
.834	-.0540						
.850				.0447	.0580	.0775	
.857			.0171				
.865	.0106						
.900	.0013			.0617			.0872
.905			.0212		.0867		
.950				.0669		.0976	
.953			.0168				
.965	-.0356						

ARC11-716 IA14 O1+T12+S12N25+AT11 UPPER WING (RB1U34)

ALPHAO(3) = -.320 BETAO (4) = 4.080

SECTION (1)UPPER WING DEPENDENT VARIABLE CP

X/CW \ Y/BW	.2990	.3640	.4270	.5340	.6730	.7800	.8870
.000	-.1203	-.0209	.2153	.3223	.2689	.2276	.2618
.020				.0983	.0373	.0286	.0053
.025			.0687				
.040		.0445					
.045			-.0143				
.050	-.0835			-.1253	-.1626	-.1904	-.2431
.080				-.2655			
.085			-.1427				
.086		.0588					
.094	-.0645						
.150				-.4045	-.4324	-.4517	-.4351
.163		.0000					
.177			-.2961				
.193		-.1054					
.229	.0015						
.250				-.4498	-.5117	-.5446	-.5682
.274			-.3429				
.339		-.3098					
.362	-.0863						
.400				-.3597	-.4211		-.3958
.402			-.3521				
.497	.0000						
.550				-.2497	-.2776		
.565			.0000				
.600							-.2355
.650						-.1925	
.700	-.1902				-.1549		
.725				-.1212			
.750						.0046	-.0178
.760			-.1246				
.775				-.0138	.0002		
.800			-.0260				
.834	-.0943						
.850				.0010	.0384	.0646	
.857			-.0266				
.865	-.0342						
.900	-.0303			.0242			.0804
.905			-.0184		.0679		
.950				.0283		.0853	
.953			-.0155				
.965	-.0099						

ARC11-716 IA14 O1+T12+S12N25+AT11 UPPER WING (RB1U34)

ALPHAO(3) = -.320 BETAO (5) = 8.110

SECTION (1)UPPER WING DEPENDENT VARIABLE CP

X/CW \ Y/BW	.2990	.3640	.4270	.5340	.6730	.7800	.8870
.000	-.1834	-.0558	.0865	.2595	.1864	.1265	.1774
.020				.0775	.0363	.0393	.0053
.025			.0087				
.040		-.0100					
.045			-.0269				
.050	-.1195			-.1151	-.1311	-.1561	-.2214
.080				-.2326			
.085			-.1022				
.086		.0155					
.094	-.0926						
.150				-.3666	-.3910	-.3900	-.4090
.163		.0070					
.177			-.2400				
.193		-.0804					
.229	-.0145						
.250				-.4238	-.4835	-.5087	-.5328
.274			-.3097				
.339		-.2754					
.362	-.0780						
.400				-.3640	-.4170		-.3890
.402			-.3375				
.497	.0000						
.550				-.2657	-.2922		
.565			.0000				
.600							-.2297
.650						-.2044	
.700	-.1832				-.1784		
.725				-.1399			
.750						-.0130	-.0239
.760			-.1478				
.775				-.0564	-.0294		
.800			-.0598				
.834	-.1240						
.850				-.0324	.0141	.0443	
.857			-.0508				
.865	-.0637						
.900	-.0613			-.0138			.0751
.905			-.0352		.0486		
.950				-.0087		.0737	
.955			-.0352				
.965	-.0765						

ARC11-716 IA14 O1+T12+S12N25+AT11 UPPER WING (RB1U34)

ALPHAO(4) = 4.000 BETAO (1) = -8.050

SECTION (1)UPPER WING DEPENDENT VARIABLE CP

Y/BW	.2990	.3640	.4270	.5340	.6730	.7800	.8870
X/CW							
.000	.0039	.0255	.3230	.5278	.4849	.4116	.3769
.020				-.3418	-.5001	-.6235	-.7206
.025			-.1741				
.040		.0387					
.045			-.3205				
.050	-.0618			-.6204	-.7701	-.8571	-.9449
.080				-.7909			
.085			-.5134				
.086		-.0130					
.094	-.0480						
.150				-.7966	-.9206	-.9565	-.8920
.163		.0000					
.177			-.6038				
.193		-.3340					
.229	-.0103						
.250				-.6838	-.8346	-.9127	-.9621
.274			-.5330				
.339		-.4741					
.362	-.2110						
.400				-.3870	-.5013		-.5234
.402			-.3625				
.497	.0000						
.550				-.1729	-.2492		
.565			.0000				
.600							-.3115
.650						-.1790	
.700	-.0505				-.1422		
.725				-.0256			
.750						.0257	-.0620
.760			-.0113				
.775				.0838	.0583		
.800			.0714				
.834	.0295						
.850				.0817	.0962	.0910	
.857			.0687				
.865	.1201						
.900	.1032			.0970			.0606
.905			.0648		.1147		
.950				.0931		.1104	
.955			.0562				
.965	.0485						

ARC11-716 IA14 O1+T12+S12N25+AT11 UPPER WING (RB1U34)

ALPHAO(4) = 4.000 BETAO (2) = -3.980

SECTION (1)UPPER WING DEPENDENT VARIABLE CP

X/CW \ Y/BW	.2990	.3640	.4270	.5340	.6730	.7800	.8870
.000	-.0508	-.0032	.2927	.4951	.4539	.3827	.3490
.020				-.2698	-.4136	-.5354	-.6468
.025			-.1364				
.040		.0336					
.045			-.2606				
.050	-.0867			-.5342	-.6675	-.7591	-.8586
.060				-.6838			
.085			-.4426				
.088		-.0050					
.094	-.0631						
.150				-.7331	-.8378	-.8797	-.8228
.163		.0000					
.177			-.5572				
.193		-.2916					
.229	-.0217						
.250				-.7153	-.7875	-.8600	-.8977
.274			-.5185				
.339		-.4607					
.362	-.1957						
.400				-.4326	-.4992		-.5199
.402			-.3910				
.497	.0000						
.550				-.2311	-.2683		
.565			.0000				
.600							-.2981
.650						-.1840	
.700	-.0891				-.1295		
.725				-.0766			
.750						.0178	-.0496
.760			-.0399				
.775				.0340	.0367		
.808			.0490				
.834	-.0129						
.850				.0450	.0786	.0831	
.857			.0512				
.865	.0667						
.900	.0593			.0600			.0660
.905			.0518		.1085		
.950				.0637		.1059	
.953			.0452				
.965	.0120						

ARC11-716 IA14 Q1+T12+S12N25+AT11 UPPER WING (RB1U34)

ALPHAO(4) = 4.000 BETAO (3) = .030

SECTION (1)UPPER WING DEPENDENT VARIABLE CP

Y/BW	.2990	.3640	.4270	.5340	.6730	.7800	.8870
X/CW							
.000	-.1129	-.0497	.2501	.4476	.4123	.3410	.3146
.020				-.2145	-.3472	-.4467	-.5597
.025			-.1026				
.040		.0165					
.045			-.2216				
.050	-.1084			-.4598	-.5917	-.6681	-.7660
.080				-.6022			
.085			-.3826				
.086		-.0031					
.094	-.0867						
.150				-.6688	-.7458	-.7950	-.7603
.163		.0000					
.177			-.5004				
.193		-.2616					
.229	-.0255						
.250				-.6524	-.7369	-.8192	-.8311
.274			-.4989				
.339		-.4415					
.362	-.1763						
.400				-.4340	-.5040		-.5143
.402			-.4038				
.437	.0000						
.550				-.2576	-.2092		
.565			.0000				
.600							-.2016
.650						-.1920	
.700	-.1300				-.1316		
.725				-.0961			
.750						.0097	-.0427
.760			-.0778				
.775				.0094	.0199		
.800			.0159				
.834	-.0533						
.850				.0236	.0600	.0753	
.857			.0160				
.865	.0160						
.900	.0186			.0450			.0720
.905			.0273		.1045		
.950				.0547		.1031	
.953			.0205				
.965	-.0172						

ARC11-718 IA14 O1+T12+S12N25+AT11 UPPER WING (RB1U34)

ALPHAO(4) = 3.990 BETAO (4) = 4.080

SECTION (1)UPPER WING DEPENDENT VARIABLE CP

Y/BW	.2990	.3640	.4270	.5340	.6730	.7800	.8870
X/CW							
.000	-.2014	-.1347	.1606	.3792	.3542	.2922	.2791
.020				-.1721	-.3018	-.3917	-.4982
.025			-.1195				
.040		-.0277					
.045			-.2053				
.050	-.1322			-.4050	-.5117	-.5886	-.6951
.080				-.5241			
.085			-.3413				
.086		-.0283					
.094	-.1011						
.150				-.6077	-.6825	-.7192	-.6984
.163		.0000					
.177			-.4564				
.193		-.2242					
.229	-.0366						
.250				-.5197	-.6888	-.7461	-.7597
.274			-.4573				
.339		-.4033					
.362	-.1622						
.400				-.3630	-.4971		-.5001
.402			-.4116				
.497	.0000						
.550				-.2128	-.3045		
.565			.0000				
.600							-.2703
.650						-.2008	
.700	-.1694				-.1515		
.725				-.0682			
.750						-.0003	-.0311
.760			-.1093				
.775				.0307	.0041		
.808			-.0215				
.834	-.0963						
.850				.0500	.0448	.0691	
.857			-.0146				
.865	-.0295						
.900	-.0226			.0700			.0808
.905			-.0038		.0849		
.950				.0765		.0945	
.953			-.0041				
.965	-.0465						

ARC11-716 1A14 01+T12+S12N25+AT11 UPPER WING (RB1U34)

ALPHAO(4) = 3.980 BETAO (5) = 8.140

SECTION (1)UPPER WING DEPENDENT VARIABLE CP

Y/BW	.2990	.3640	.4270	.5340	.6730	.7800	.8870
X/CW							
.000	-.2971	-.1617	-.0012	.2731	.3085	.2495	.2451
.020				-.1391	-.2336	-.3034	-.4102
.025			-.1468				
.040		-.0638					
.045			-.1909				
.050	-.1852			-.3257	-.4172	-.4995	-.6074
.060				-.4456			
.065			-.2684				
.086		-.0656					
.094	-.1507						
.150				-.5349	-.6097	-.6520	-.6411
.163		.0000					
.177			-.3612				
.193		-.1866					
.229	-.0473						
.250				-.4830	-.6299	-.6790	-.6954
.274			-.3972				
.339		-.3590					
.362	-.1463						
.400				-.3689	-.4840		-.4747
.402			-.3793				
.497	.0000						
.550				-.2419	-.3105		
.565			.0000				
.600							-.2510
.650						-.2050	
.700	-.1959				-.1726		
.725				-.1120			
.750						-.0060	-.0238
.760			-.1482				
.775				-.0256	-.0219		
.808			-.0767				
.874	-.1283						
.850				-.0005	.0245	.0547	
.857			-.0538				
.855	-.0736						
.900	-.0599			.0173			.0820
.905			-.0412		.0578		
.950				.0259		.0647	
.953			-.0376				
.965	-.0733						

ARC11-716 IA14 O1+T12+S12N25+AT11 UPPER WING (RB1U34)

ALPHA3(5) = 7.890 BETAO (1) = -8.010

SECTION (1)UPPER WING DEPENDENT VARIABLE CP

Y/BW	.2990	.3640	.4270	.5340	.6730	.7800	.8870
X/CW							
.000	-.0642	-.1053	.2206	.4143	.2437	.0422	-.0818
.020				-.7618	-1.0790	-1.3940	-1.7240
.025			-.4440				
.040		-.0849					
.045			-.5871				
.050	-.1224			-1.0280	-1.3170	-1.5370	-1.7310
.060				-1.1650			
.065			-.7640				
.086		-.1394					
.094	-.1040						
.150				-1.0530	-1.2600	-1.3480	-1.2570
.163		.0000					
.177			-.7874				
.193		-.4873					
.229	-.0590						
.250				-.9047	-.9843	-1.0660	-1.2440
.274			-.6371				
.339		-.5660					
.362	-.2859						
.400				-.4887	-.5598		-.7295
.402			-.3934				
.497	.0000						
.550				-.2206	-.2731		
.565			.0000				
.600							-.4030
.650						-.2042	
.700	-.0700				-.1437		
.725				-.0508			
.750						-.0140	-.1513
.760			-.0571				
.775				.0434	.0465		
.800			.0285				
.834	.0402						
.850				.0580	.0871	.0558	
.857			.0439				
.865	.1302						
.900	.1171			.0643			-.0218
.905			.0644		.1101		
.950				.0640		.0859	
.953			.0683				
.965	.0527						

ARC11-716 IA14 O1+TI2+S12N25+AT11 UPPER WING (RB1U54)

ALPHAO(5) = 7.900 BETAO (2) = -4.010

SECTION (1)UPPER WING DEPENDENT VARIABLE CP

Y/BW	.2990	.3640	.4270	.5340	.6730	.7800	.8870
X/CW							
.000	-.1266	-.1324	.2011	.4073	.2659	.0600	-.0764
.020				-.6487	-.9431	-1.2400	-1.3740
.025			-.3700				
.040		-.0761					
.045			-.5126				
.050	-.1484			-.8911	-1.1710	-1.3710	-1.5770
.080				-1.0430			
.085			-.6769				
.086		-.1201					
.094	-.1193						
.150				-.9662	-1.1550	-1.2340	-1.1780
.163		.0000					
.177			-.7240				
.193		-.4336					
.229	-.0682						
.250				-.7863	-.9216	-1.0610	-1.1510
.274			-.6259				
.339		-.5509					
.362	-.2722						
.400				-.4389	-.5674		-.6833
.402			-.4267				
.497	.0000						
.550				-.2041	-.2851		
.565			.0000				
.600							-.3789
.650						-.2019	
.700	-.1145				-.1204		
.725				-.0410			
.750						-.0069	-.1197
.760			-.0560				
.775				.0516	.0300		
.800			.0167				
.834	-.0010						
.850				.0656	.0780	.0588	
.857			.0254				
.865	.0799						
.900	.0772			.0843			.0206
.905			.0431		.0996		
.950				.0891		.0905	
.953			.0485				
.965	.0309						

ARC11-716 IA14 O1+T12+S12N25+AT11 UPPER WING (RB1U34)

ALPHAO(5) = 7.910 BETAO (3) = .040

SECTION (1)UPPER WING DEPENDENT VARIABLE CP

Y/BW	.2990	.3640	.4270	.5340	.6730	.7800	.8870
X/CW							
.000	-.2018	-.1885	.1572	.3848	.2621	.0728	-.0736
.020				-.5402	-.8178	-1.0950	-1.3950
.025			-.3086				
.040		-.0831					
.045			-.4410				
.050	-.1649			-.7617	-1.0180	-1.2160	-1.4320
.080				-.9085			
.085			-.5902				
.088		-.1072					
.094	-.1302						
.150				-.8782	-1.0500	-1.1330	-1.0920
.163		.0000					
.177			-.6631				
.193		-.3858					
.229	-.0688						
.250				-.7558	-.8995	-1.0310	-1.0750
.274			-.6027				
.339		-.5321					
.362	-.2548						
.400				-.4613	-.5638		-.6332
.402			-.4470				
.497	.0000						
.550				-.2370	-.3079		
.565			.0000				
.600							-.3509
.650						-.2090	
.700	-.1582				-.1178		
.725				-.0654			
.750						-.0061	-.0961
.760			-.0646				
.775				.0272	.0152		
.808			.0080				
.834	-.0336						
.850				.0460	.0655	.0553	
.857			.0129				
.865	.0330						
.900	.0422			.0594			.0348
.905			.0257		.0963		
.950				.0728		.0909	
.953			.0310				
.965	.0045						

ARC11-716 IA14 O1+T12+S12N25+AT11 UPPER WING (RB1U34)

ALPHAO(5) = 7.900 BETAO (4) = 4.100

SECTION (1)UPPER WING DEPENDENT VARIABLE CP

Y/BW	.2990	.3840	.4270	.5340	.6730	.7800	.8870
X/CW							
.000	-.3232	-.3187	.0511	.3384	.2537	.0842	-.0518
.020				-.4775	-.7040	-.9609	-1.2350
.025			-.3081				
.040		-.1269					
.045			-.4131				
.050	-.1894			-.6891	-.9187	-1.0790	-1.2960
.080				-.7999			
.085			-.5352				
.086		-.1305					
.094	-.1460						
.150				-.8077	-.9614	-1.0390	-1.0070
.163		.0000					
.177			-.5957				
.193		-.3337					
.229	-.0882						
.250				-.7170	-.8584	-.9588	-.9919
.274			-.5608				
.339		-.4809					
.362	-.2352						
.400				-.4640	-.5601		-.5955
.402			-.4495				
.497	.0000						
.550				-.2764	-.3156		
.565			.0000				
.600							-.3325
.650						-.2111	
.700	-.1895				-.1448		
.725				-.1058			
.750						-.0141	-.0767
.760			-.1017				
.775				-.0081	.0053		
.800			-.0262				
.834	-.0012						
.850				.0149	.0510	.0614	
.857			-.0149				
.865	-.0265						
.900	-.0160			.0399			.0442
.905			-.0053		.0858		
.950				.0476		.0940	
.953			.0012				
.965	-.0357						

ARC11-716 IA14 O1+T12+S12N25+AT11 UPPER WING (RB1U34)

ALPHAO(5) = 7.880 BETAO (5) = 8.170

SECTION (1)UPPER WING DEPENDENT VARIABLE CP

Y/BW	.299.	.3640	.4270	.5340	.6730	.7800	.8870
X/CW							
.000	-.4262	-.2711	-.1771	.1749	.2560	.1136	-.0019
.020				-.4214	-.5750	-.7730	-1.0220
.025			-.3027				
.040		-.1402					
.045			-.3419				
.050	-.2424			-.5733	-.7548	-.9049	-1.1200
.080				-.6575			
.085			-.3941				
.086		-.1426					
.094	-.2401						
.150				-.6799	-.8112	-.9079	-.9004
.163		.0000					
.177			-.4484				
.193		-.2806					
.229	-.1240						
.250				-.6170	-.7655	-.8563	-.8906
.274			-.4523				
.339		-.4156					
.362	-.2015						
.400				-.4359	-.5273		-.5311
.492			-.4051				
.497	.0000						
.550				-.2810	-.3180		
.565			.0000				
.600							-.3047
.650						-.2103	
.700	-.2084				-.1696		
.72[illegible]				-.1331			
.75[illegible]						-.0101	-.0560
.76[illegible]			-.1492				
.77[illegible]				-.0649	-.0202		
.809			-.0815				
.83[illegible]	-.1285						
.850				-.0321	.0285	.0521	
.857			-.0662				
.865	-.0794						
.900	-.0609			-.0134			.0597
.905			-.0488		.0629		
.950				-.0001		.0853	
.953			-.0413				
.965	-.0743						

ARC11-716 IA14 O1+T12+S12N25+AT11 UPPER WING (RB1U35) (15 FEB 74)

REFERENCE DATA

SREF =	2.4210 SQ.FT.	XMRP =	29.5800 INCHES
LREF =	38.7090 INCHES	YMRP =	.0000 INCHES
BREF =	38.7090 INCHES	ZMRP =	.0000 INCHES
SCALE =	.0300 SCALE		

ALPHAO(1) = -8.050 BETAO (1) = -8.000

PARAMETRIC DATA

MACH =	.750	ELEVON =	.000
RUDDER =	.000	SPOBRK =	.000

SECTION (1)UPPER WING DEPENDENT VARIABLE CP

Y/BW	.2990	.3640	.4270	.5340	.6730	.7800	.8870
X/CW							
.000	.0390	.0430	.2463	.2527	.1107	-.0013	.0585
.020				.4912	.4700	.4893	.4620
.025			.3810				
.040		.2111					
.045			.3109				
.050	.0371			.2727	.2898	.2964	.2544
.080				.1047			
.085			.1689				
.086		.2695					
.094	.0915						
.150				-.1127	-.0843	-.0818	-.0904
.163		.0000					
.177			-.0491				
.193		.1252					
.229	.1540						
.250				-.2560	-.2537	-.2960	-.3343
.274			-.1347				
.339		-.1152					
.362	.0959						
.400				-.2055	-.2539		-.2939
.402			-.1526				
.497	.0000						
.550				-.1170	-.1538		
.565			.0000				
.600							-.1898
.650						-.1247	
.700	.0546				-.1448		
.725				-.0486			
.750						.0862	.0338
.760			-.0225				
.775				.0907	.0914		
.808			.1053				
.834	.0326						
.850				.0677	.1104	.1172	
.857			.0826				
.865	.1242						
.900	.0865			.0737			.0957
.905			.0686		.1114		

ARC11-716 IA14 01+T12+5'2N25+AT11 UPPER WING (RB1U35)

ALPHAO(1) = -8.050 BETAO (1) = -8.000

SECTION (1)UPPER WING DEPENDENT VARIABLE CP

Y/BW	.2990	.3640	.4270	.5340	.6730	.7800	.8870
X/CW							
.950				.0525		.1214	
.953			.0337				
.965	-.0027						

ALPHAO(1) = -8.040 BETAO (2) = -3.990

SECTION (1)UPPER WING DEPENDENT VARIABLE CP

Y/BW	.2990	.3640	.4270	.5340	.6730	.7800	.8870
X/CW							
.000	-.0043	-.0105	.1574	.1303	-.0334	-.1496	-.0775
.020				.4703	.4360	.4500	.4067
.025			.3545				
.040		.1593					
.045			.3111				
.050	.0498			.2845	.2962	.2918	.2372
.080				.1288			
.085			.1887				
.086		.2389					
.094	.0608						
.150				-.0853	-.0637	-.0548	-.0880
.163		.0000					
.177			-.0223				
.193		.1356					
.229	.1344						
.250				-.2148	-.2340	-.2624	-.3089
.274			-.1249				
.339		-.1049					
.362	.1022						
.400				-.1915	-.2570		-.3081
.402			-.1765				
.497	.0000						
.550				-.1290	-.1846		
.565			.0000				
.600							-.2057
.650						-.1504	
.700	.0050				-.1494		
.725				-.0667			
.750						.0663	.0230
.760			-.0672				
.775				.0726	.0665		
.808			.0677				
.834	-.0152						
.850				.0605	.0853	.0983	

ARC11-716 IA14 O1+T12+S12N25+AT11 UPPER WING (RB1U35)

ALPHAO(1) = -8.040 BETAO (2) = -3.990

SECTION (1)UPPER WING DEPENDENT VARIABLE CP

X/CW \ Y/BW	.2990	.3640	.4270	.5340	.6730	.7800	.8870
.857			.0438				
.865	.0789						
.900	.0459			.0671			.0783
.905			.0396		.0912		
.950				.0504		.1062	
.953			.0106				
.965	-.0311						

ALPHAO(1) = -8.040 BETAO (3) = .040

SECTION (1)UPPER WING DEPENDENT VARIABLE CP

X/CW \ Y/BW	.2990	.3640	.4270	.5340	.6730	.7800	.8870
.000	-.0251	-.0280	.0988	.0130	-.1618	-.3013	-.2179
.020				.4439	.3848	.3929	.3462
.025			.3177				
.040		.1212					
.045			.2833				
.050	.0179			.2776	.2733	.2657	.2230
.060				.1410			
.065			.1909				
.086		.2077					
.094	.0323						
.150				-.0648	-.0482	-.0474	-.0900
.163		.0000					
.177			.0025				
.193		.1344					
.229	.1116						
.250				-.2248	-.2214	-.2550	-.3098
.274			-.1097				
.339		-.0949					
.362	.0967						
.400				-.2424	-.2781		-.3210
.402			-.1928				
.497	.0000						
.550				-.2040	-.2139		
.565			.0000				
.600							-.2262
.650						-.1760	
.700	-.0497				-.1558		
.725				-.1332			
.750						.0414	.0034
.760			-.1110				

ARC11-716 TA14 01+T12+S12N25+AT11 UPPER WING (RB1U35)

ALPHAO(1) = -8.040 BETAO (3) = .040

SECTION (1)UPPER WING DEPENDENT VARIABLE CP

Y/BW	.2990	.3640	.4270	.5340	.6730	.7800	.8870
X/CW							
.775				.0153	.0346		
.808			.0225				
.834	-.0629						
.850				.0013	.0583	.0755	
.857			.0113				
.865	.0297						
.900	.0029			.015[illegible]			.0688
.905			.0060		.0706		
.950				.0027		.0894	
.953			-.0185				
.965	-.0589						

ALPHAO(1) = -8.050 BETAO (4) = 4.080

SECTION (1)UPPER WING DEPENDENT VARIABLE CP

Y/BW	.2990	.3640	.4270	.5340	.6730	.7800	.8870
X/CW							
.000	-.0281	-.0047	.0654	-.0746	-.2955	-.4186	-.3258
.020				.3992	.3160	.3290	.2731
.025			.2754				
.040		.0952					
.045			.2544				
.050	-.0012			.2606	.2420	.2241	.1732
.080				.1424			
.085			.1859				
.086		.1802					
.094	.0173						
.150				-.0550	-.0569	-.0538	-.1071
.163		.0000					
.177			.0134				
.193		.1318					
.229	.0983						
.250				-.1780	-.2247	-.2610	-.3086
.274			-.1096				
.339		-.0916					
.362	.0949						
.400				-.2129	-.2963		-.3355
.402			-.2131				
.497	.0000						
.550				-.1857	-.2472		
.565			.0000				
.600							-.2328
.650						-.2034	

ARC11-716 IA14 O1+T12+S12N25+AT11 UPPER WING (RB1U35)

ALPHAO(1) = -8.050 BETAO (4) = 4.080

SECTION (1)UPPER WING DEPENDENT VARIABLE CP

Y/BW	.2990	.3640	.4270	.5340	.6730	.7800	.8870
X/CW							
.700	-.1009				-.1751		
.725				-.1183			
.750						.0159	-.0133
.760			-.1437				
.775				.0153	.0062		
.808			-.0102				
.834	-.1054						
.850				.0124	.0337	.0589	
.857			-.0173				
.865	-.0105						
.900	-.0276			.0278			.0568
.905			-.0149		.0431		
.950				.0158		.0691	
.953			-.0421				
.965	-.0744						

ALPHAO(1) = -8.060 BETAO (5) = 8.150

SECTION (1:UPPER WING DEPENDENT VARIABLE CP

Y/BW	.2990	.3640	.4270	.5340	.6730	.7800	.8870
X/CW							
.000	-.0684	-.0207	.0307	-.1316	-.3770	-.5135	-.4313
.020				.3536	.2630	.2639	.2022
.025			.2403				
.040		.0598					
.045			.2267				
.050	-.0306			.2383	.2095	.1902	.1345
.080				.1343			
.085			.1695				
.086		.1439					
.094	-.0126						
.150				-.0510	-.0510	-.0611	-.1800
.163		.0000					
.177			.0108				
.193		.1194					
.229	.0737						
.250				-.1591	-.2228	-.2501	-.3074
.274			-.1105				
.339		-.1009					
.362	.0005						
.400				-.2746	-.3066		-.3319
.402			-.2412				
.497	.0000						

ARC11-716 IA14 O1+T12+S12N25+AT11 UPPER WING (R81U35)

ALPHAO(1) = -8.060 BETAO (5) = 8.150

SECTION (1)UPPER WING DEPENDENT VARIABLE CP

X/CW \ Y/BW	.2990	.3640	.4270	.5340	.6730	.7800	.8870
.550				-.2098	-.2667		
.565			.0000				
.600							-.2396
.650						-.2127	
.700	-.1561				-.1908		
.725				-.1311			
.750						-.0049	-.0235
.760			-.1732				
.775				.0006	-.0173		
.808			-.0396				
.834	-.1386						
.850				.0021	.0193	.0434	
.857			-.0460				
.865	-.0367						
.900	-.0449			.0219			.0595
.905			-.0367		.0351		
.950				.0124		.0596	
.953			-.0529				
.965	-.0869						

ALPHAO(2) = -4.070 BETAO (1) = -8.040

SECTION (1)UPPER WING DEPENDENT VARIABLE CP

X/CW \ Y/BW	.2990	.3640	.4270	.5340	.6730	.7800	.8870
.000	.0613	.1302	.3817	.4695	.4069	.3335	.3530
.020				.3103	.2868	.2935	.2941
.025			.2639				
.040		.2050					
.045			.1547				
.050	.0488			.0316	.0273	.0340	-.0045
.080				-.1596			
.085			-.0234				
.086		.2063					
.094	.0507						
.150				-.3443	-.3565	-.3525	-.3371
.163		.0000					
.177			-.2403				
.193		-.0116					
.229	.1033						
.250				-.4791	-.4783	-.5414	-.5663
.274			-.2998				
.339		-.2603					

ARC11-716 IA14 O1+T12+S12N25+AT11 UPPER WING (RB1U35)

ALPHAO(2) = -4.070 BETAO (1) = -8.040

SECTION . 1)UPPER WING DEPENDENT VARIABLE CP

Y/BW	.2990	.3640	.4270	.5340	.6730	.7800	.8870
X/CW							
.362	-.0030						
.400				-.3298	-.3649		-.3961
.402			-.2608				
.497	.0000						
.550				-.1849	-.2020		
.565			.0000				
.600							-.2282
.650						-.1486	
.700	.0112				-.1529		
.725				-.0772			
.750						.0724	.0111
.760			-.0273				
.775				.0691	.0786		
.808			.0958				
.834	.0232						
.850				.0529	.1020	.1106	
.857			.0781				
.865	.1137						
.900	.0855			.0610			.1025
.905			.0678		.1017		
.950				.0409		.1119	
.953			.0408				
.965	.0031						

ALPHAO(2) = -4.080 BETAO (2) = -4.000

SECTION (1)UPPER WING DEPENDENT VARIABLE CP

Y/BW	.2990	.3640	.4270	.5340	.6730	.7800	.8870
X/CW							
.000	.0167	.0057	.3154	.3746	.2795	.1881	.2177
.020				.3153	.2810	.2934	.2788
.025			.2542				
.040		.1697					
.045			.1624				
.050	.0124			.0691	.0580	.0571	.0171
.080				-.1058			
.085			.0107				
.088		.1901					
.094	.0184						
.150				-.3089	-.3114	-.3130	-.3102
.163		.0000					
.177			-.2078				
.193		.0075					

ARC11-716 IA14 01+T12+S12N25+AT11 UPPER WING (RB1U35)

ALPHAO(2) = -4.080 BETAO (2) = -4.000

SECTION (1)UPPER WING DEPENDENT VARIABLE CP

Y/BW	.2990	.3640	.4270	.5340	.6730	.7800	.8870
X/CW							
.229	.0791						
.250				-.4173	-.4341	-.4815	-.5277
.274			-.2767				
.339		-.2482					
.362	.0003						
.400				-.3222	-.3728		-.3919
.402			-.2753				
.497	.0000						
.550				-.2051	-.2371		
.565			.0000				
.600							-.2330
.650						-.1751	
.700	-.0420				-.1523		
.725				-.0966			
.750						.0505	.0032
.760			-.0681				
.775				.0478	.0601		
.800			.0586				
.834	-.0264						
.850				.0434	.0796	.0985	
.857			.0424				
.865	.0644						
.900	.0400			.0472			.0957
.905			.0406		.0890		
.950				.0391		.0988	
.953			.0208				
.965	-.0243						

ALPHAO(2) = -4.080 BETAO (3) = .040

SECTION (1)UPPER WING DEPENDENT VARIABLE CP

Y/BW	.2990	.3640	.4270	.5340	.6730	.7800	.8870
X/CW							
.000	-.0136	.0578	.2558	.2776	.1463	.0423	.0920
.020				.3098	.2621	.2797	.2481
.025			.2390				
.040		.1352					
.045			.1587				
.050	-.0155			.0901	.0806	.0712	.0147
.080				-.0638			
.085			.0262				
.086		.1661					
.094	-.0022						

ARC11-716 IA14 O1+T12+S12N25+AT11 UPPER WING (RB1U35)

ALPHAO(2) = -4.080 BETAO (3) = .040

SECTION (1)UPPER WING DEPENDENT VARIABLE CP

Y/BW	.2990	.3640	.4270	.5340	.6730	.7800	.8870
X/CW							
.150				-.2614	-.2572	-.2698	-.2884
.163		.0000					
.177			-.1685				
.193		.0159					
.229	.0662						
.250				-.4238	-.4066	-.4577	-.4895
.274			-.2561				
.339		-.2205					
.362	.0109						
.400				-.3677	-.3890		-.3881
.402			-.2859				
.497	.0000						
.550				-.2695	-.2630		
.565			.0000				
.600							-.2331
.650						-.1943	
.700	-.0889				-.1492		
.725				-.1517			
.750						.0299	-.0101
.760			-.1049				
.775				-.0101	.0237		
.808			.0167				
.834	-.0676						
.850				-.0112	.0540	.0756	
.857			.0077				
.865	.0148						
.900	-.0090			.0053			.0854
.905			.0090		.0729		
.950				-.0003		.0843	
.953			-.0054				
.965	-.0581						

ALPHAO(2) = -4.080 BETAO (4) = 4.090

SECTION (1)UPPER WING DEPENDENT VARIABLE CP

Y/BW	.2990	.3640	.4270	.5340	.6730	.7800	.8870
X/CW							
.000	-.0588	.0290	.2062	.1970	.0489	-.0596	-.0081
.020				.2779	.2214	.2336	.2009
.025			.1972				
.040		.0938					
.045			.1424				
.050	-.0381			.0835	.0677	.0533	-.0072

ARC11-716 IA14 O1+T12+S12N25+AT11 UPPER WING (RB1U35)

ALPHAD(2) = -4.080 BETAD (4) = 4.090

SECTION (1)UPPER WING DEPENDENT VARIABLE CP

Y/BW	.2990	.3640	.4270	.5340	.6730	.7800	.8870
X/CW							
.080				-.0514			
.085			.0315				
.086		.1346					
.094	-.0203						
.150				-.2368	-.2535	-.2682	-.2964
.163		.0000					
.177			-.1436				
.193		.0194					
.229	.0556						
.250				-.3400	-.4019	-.4411	-.4867
.274			-.2411				
.339		-.2158					
.362	.0065						
.400				-.3193	-.4011		-.4119
.402			-.3116				
.497	.0000						
.550				-.2569	-.2982		
.565			.0000				
.600							-.2498
.650						-.2193	
.700	-.1498				-.1797		
.725				-.1470			
.750						.0022	-.0200
.760			-.1449				
.775				-.0081	.0008		
.808			-.0231				
.834	-.1197						
.850				.0013	.0329	.0578	
.857			-.0261				
.865	-.0332						
.900	-.0388			.0162			.0709
.905			-.0200		.0578		
.950				.0120		.0731	
.953			-.0342				
.965	-.0702						

DATE 10 JAN 75 TABULATED PRESSURE DATA - IA14A - VOL. 6 (RB1U35)

ARC11-716 IA14 O1+T12+S12N25+AT11 UPPER WING

ALPHA0(2) = -4.090 BETA0 (5) = 8.150

SECTION (1)UPPER WING DEPENDENT VARIABLE CP

Y/BW	.2990	.3640	.4270	.5340	.6730	.7800	.8670
X/CW							
.000	-.1078	-.0070	.0747	.1324	-.0356	-.1507	-.1151
.020				.2396	.1876	.1996	.1542
.025			.1366				
.040		.0411					
.045			.1124				
.050	-.0728			.0841	.0646	.0426	-.0150
.080				-.0330			
.085			.0618				
.086		.0824					
.094	-.0495						
.150				-.2075	-.2299	-.2352	-.2821
.163		.0000					
.177			-.1111				
.193		.0290					
.229	.0326						
.250				-.2664	-.3730	-.4257	-.4617
.274			-.2202				
.339		-.1948					
.362	.0042						
.400				-.2830	-.4151		-.4072
.402			-.3198				
.497	.0000						
.550				-.2385	-.3163		
.565			.0000				
.600							-.2433
.650						-.2296	
.700	-.2019				-.1861		
.725				-.1197			
.750						-.0094	-.0301
.760			-.1770				
.775				-.0113	-.0283		
.800			-.0592				
.834	-.1466						
.850				.0019	.0118	.0416	
.857			-.0527				
.865	-.0630						
.900	-.0651			.0242			.0672
.905			-.0440		.0404		
.950				.0235		.0654	
.953			-.0488				
.965	-.0060						

ARC11-716 IA14 D1+T12+S12N25+AT11 UPPER WING (RB1U35)

ALPHAD(3) = -.310 BETAD (1) = -8.080

SECTION (1)UPPER WING DEPENDENT VARIABLE CP

Y/BW	.2990	.3640	.4270	.5340	.6730	.7800	.8870
X/CW							
.000	.0479	.1251	.4091	.5778	.5557	.5137	.5223
.020				.0483	.0011	-.0357	-.0593
.025			.0849				
.040		.1527					
.045			-.0462				
.050	-.0034			-.2497	-.3127	-.3278	-.3998
.080				-.4638			
.085			-.2457				
.086		.1258					
.094	.0063						
.150				-.6081	-.6671	-.6903	-.6371
.163		.0000					
.177			-.4484				
.193		-.1600					
.229	.0547						
.250				-.6882	-.7237	-.8366	-.8510
.274			-.4622				
.339		-.4102					
.362	-.0970						
.400				-.4001	-.4427		-.4569
.402			-.3385				
.497	.0000						
.550				-.2047	-.2270		
.562			.0000				
.600							-.2719
.650						-.1575	
.700	-.0140				-.1526		
.725				-.0672			
.750						.0683	-.0055
.760			-.0066				
.775				.0740	.0827		
.808			.1018				
.834	.0302						
.850				.0019	.1099	.1125	
.857			.0892				
.865	.1273						
.900	.1020			.0689			.1063
.905			.0778		.1228		
.950				.0535		.1238	
.953			.0543				
.965	.0276						

ARC11-716 IA14 O1+T12+S12N25+AT11 UPPER WING (RB1U35)

ALPHAO(3) = -.320 BETAO (2) = -4.010

SECTION (1)UPPER WING DEPENDENT VARIABLE CP

Y/BW	.2990	.3640	.4270	.5340	.6730	.7800	.8870
X/CW							
.000	-.0030	.0875	.3612	.5109	.4798	.4281	.4416
.020				.0916	.0349	.0008	-.0376
.025			.1089				
.040		.1342					
.045			-.0055				
.050	-.0288			-.1903	-.2467	-.2760	-.3491
.080				-.3783			
.085			-.1946				
.086		.1185					
.094	-.0153						
.150				-.5436	-.5964	-.6080	-.5891
.163		.0000					
.177			-.3973				
.193		-.1302					
.229	.0384						
.250				-.6472	-.6706	-.7646	-.7934
.274			-.4359				
.339		-.3885					
.362	-.0938						
.400				-.4307	-.4665		-.4638
.402			-.3647				
.497	.0000						
.550				-.2526	-.2596		
.565			.0000				
.600							-.2669
.650						-.1777	
.700	-.0682				-.1474		
.725				-.1133			
.750						.0496	-.0088
.760			-.0590				
.775				.0372	.0599		
.800			.0598				
.834	-.0200						
.850				.0339	.0876	.1030	
.857			.0538				
.865	.0099						
.900	.0328			.0459			.1021
.905			.0467		.0982		
.950				.0378		.1082	
.953			.0290				
.965	-.0022						

ARC11-716 IA14 O1+T12+S12N25+AT11 UPPER WING (RB1U35)

ALPHAO(3) = -.330 BETAO (3) = .050

SECTION (1)UPPER WING DEPENDENT VARIABLE CP

Y/BW	.2990	.3640	.4270	.5340	.6730	.7800	.8870
X/CW							
.000	-.0517	.0445	.3070	.4308	.3866	.3337	.3527
.020				.1181	.0535	.0172	-.0184
.025			.1085				
.040		.1097					
.045			.0100				
.050	-.0570			-.1417	-.2003	-.2309	-.3115
.080				-.3120			
.085			-.1483				
.086		.1079					
.094	-.0364						
.150				-.4732	-.5263	-.5465	-.5497
.163		.0000					
.177			-.3464				
.193		-.1039					
.229	.0329						
.250				-.6224	-.6101	-.7063	-.7363
.274			-.3972				
.339		-.3566					
.362	-.0733						
.400				-.4746	-.4821		-.4646
.402			-.3782				
.497	.0000						
.550				-.3241	-.2904		
.565			.0000				
.600							-.2644
.650						-.1976	
.700	-.1207				-.1553		
.725				-.1731			
.750						.0313	-.0130
.760			-.1006				
.775				-.0179	.0311		
.800			.0184				
.834	-.0670						
.850				-.0122	.0637	.0829	
.857			.0186				
.865	.0136						
.900	.0052			.0053			.0943
.905			.0180		.0817		
.950				.0031		.0971	
.953			.0078				
.965	-.0409						

ARC11-716 IA14 O1+T12+S12N25+AT11 UPPER WING (RB1U35)

ALPHA0(3) = -.320 BETA0 (4) = 4.080

SECTION (1)UPPER WING DEPENDENT VARIABLE CP

Y/BW	.2930	.3640	.4270	.5340	.6730	.7800	.8870
X/CW							
.000	-.1239	-.0133	.2284	.3584	.2944	.2440	.2733
.020				.1109	.0365	.0152	-.0336
.025			.0842				
.040		.0547					
.045			.0068				
.050	-.0812			-.1244	-.1733	-.2209	-.3086
.080				-.2742			
.085			-.1264				
.086		.0736					
.094	-.0590						
.150				-.4230	-.4734	-.5135	-.5329
.163		.0000					
.177			-.2972				
.193		-.0824					
.229	.0174						
.250				-.5075	-.5822	-.6540	-.6859
.274			-.3622				
.339		-.3217					
.362	-.0688						
.400				-.4145	-.4977		-.4650
.402			-.3904				
.497	.0000						
.550				-.2897	-.3249		
.565			.0000				
.600							-.2645
.650						-.2180	
.700	-.1760				-.1707		
.725				-.1549			
.750						.0141	-.0166
.760			-.1364				
.775				-.0139	.0050		
.808			-.0270				
.834	-.1177						
.850				-.0007	.0412	.0685	
.857			-.0245				
.865	-.0400						
.900	-.0408			.0180			.0881
.905			-.0181		.0630		
.950				.0220		.0866	
.953			-.0271				
.955	-.0701						

ARC11-716 !A14 O1+T12+S12N25+AT11 UPPER WING (RB1U35)

ALPHAO(3) = -.320 BETAO (5) = 8.130

SECTION (1)UPPER WING DEPENDENT VARIABLE CP

X/CW \ Y/BW	.2990	.3640	.4270	.5340	.6730	.7800	.8870
.000	-.1901	-.0498	.0766	.2591	.2179	.1502	.1804
.020				.0820	.0420	.0275	-.0290
.025			.0188				
.040		.0003					
.045			-.0201				
.050	-.1209			-.1021	-.1326	-.1842	-.2718
.080				-.2268			
.085			-.0923				
.086		.0171					
.094	-.0838						
.150				-.3675	-.4179	-.4384	-.4835
.163		.0000					
.177			-.2219				
.193		-.0582					
.229	-.0060						
.250				-.3849	-.5253	-.5916	-.6317
.274			-.3063				
.339		-.2668					
.362	-.0599						
.400				-.3511	-.4911		-.4555
.402			-.3667				
.497	.0000						
.550				-.2645	-.3448		
.565			.0000				
.600							-.2551
.650						-.2341	
.700	-.2229				-.1915		
.725				-.1302			
.750						-.0125	-.0198
.760			-.1712				
.775				-.0304	-.0253		
.808			-.0784				
.834	-.1565						
.850				-.0042	.0175	.0482	
.857			-.0624				
.865	-.0857						
.900	-.0788			.0098			.0782
.905			-.0475		.0381		
.950				.0115		.0720	
.953			-.0480				
.965	-.0873						

ARC11-716 IA14 O1+T12+S12N25+AT11 UPPER WING (RB1U35)

ALPHAO(4) = 4.020 BETAO (1) = -8.060

SECTION (1)UPPER WING DEPENDENT VARIABLE CP

Y/BW	.2990	.3640	.4270	.5340	.6730	.7800	.8870
X/CW							
.000	.0033	.0396	.3567	.5659	.5192	.4390	.3877
.020				-.2854	-.4086	-.5716	-.7047
.025			-.1318				
.040		.0627					
.045			-.2864				
.050	-.0594			-.5960	-.7469	-.8635	-1.0330
.080				-.8214			
.085			-.5084				
.086		.0160					
.094	-.0396						
.150				-.9476	-1.1540	-1.1680	-1.0990
.163		.0000					
.177			-.7164				
.193		-.3179					
.225	.0080						
.250				-.9606	-1.0910	-1.2440	-1.2270
.274			-.6567				
.339		-.5801					
.362	-.1981						
.400				-.4594	-.4802		-.6675
.402			-.4150				
.497	.0000						
.550				-.1971	-.2292		
.565			.0000				
.600							-.3062
.650						-.1584	
.700	-.0505				-.1539		
.725				-.0498			
.750						.0459	-.0519
.760			-.0036				
.775				.0678	.0879		
.808			.0811				
.834	.0412						
.850				.0734	.1182	.1058	
.857			.0836				
.865	.1497						
.900	.1225			.0756			.0668
.905			.0794		.1290		
.950				.0667		.1203	
.953			.0627				
.965	.0499						

ARC11-716 IA14 D1+112+S12N25+AT11 UPPER WING (RB1U35)

ALPHA(I 4) = 4.020 BETA(I 2) = -4.030

SECTION (1)UPPER WING DEPENDENT VARIABLE CP

Y/BW	.2990	.3640	.4270	.5340	.6730	.7800	.8870
X/CW							
.000	-.0515	.0143	.3324	.5285	.4807	.3932	.3476
.020				-.2197	-.3507	-.4994	-.6455
.025			-.0909				
.040		.0575					
.045			-.2303				
.050	-.0820			-.5101	-.6640	-.7853	-.9684
.060				-.7202			
.085			-.4298				
.086		.0260					
.094	-.0633						
.150				-.8274	-.9927	-1.0700	-1.0210
.163		.0000					
.177			-.6205				
.193		-.2792					
.229	-.0001						
.250				-.8210	-1.0010	-1.1320	-1.1400
.274			-.6192				
.339		-.5459					
.362	-.1751						
.400				-.4327	-.5137		-.5303
.402			-.4438				
.497	.0000						
.550				-.2030	-.2668		
.565			.0000				
.600							-.3085
.650						-.1798	
.700	-.0982				-.1410		
.725				-.0498			
.750						.0420	-.0387
.760			-.0319				
.775				.0702	.0643		
.808			.0644				
.834	-.0070						
.850				.0779	.1007	.1002	
.857			.0609				
.865	.0873						
.900	.0752			.0839			.0770
.905			.0615		.1213		
.950				.0789		.1199	
.953			.0485				
.965	.0245						

ARC11-716 IA14 O1+T12+S12N25+AT11 UPPER WING (RB1U35)

ALPHAO(4) = 4.020 MO (3) = .040

SECTION (1)UPPER WING DEPENDENT VARIABLE CP

X/CW \ Y/BW	.2990	.3640	.4270	.5340	.6730	.7800	.8870
.000	-.1158	-.0440	.2779	.4722	.4318	.3511	.3082
.020				-.1618	-.2939	-.4434	-.5907
.025			-.0642				
.040		.0374					
.045			-.1926				
.050	-.1028			-.4327	-.5890	-.6957	-.8768
.080				-.6151			
.085			-.3518				
.086		.0222					
.094	-.0809						
.150				-.7307	-.8562	-.9323	-.9241
.163		.0000					
.177			-.5445				
.193		-.2352					
.229	-.0084						
.250				-.7306	-.8977	-1.0360	-1.0180
.274			-.5588				
.339		-.4898					
.362	-.1554						
.400				-.4634	-.5330		-.5026
.402			-.4585				
.497	.0000						
.550				-.2602	-.2968		
.585			.0000				
.600							-.2966
.650						-.1949	
.700	-.1419				-.1420		
.725				-.0939			
.750						.0339	-.0276
.760			-.0745				
.775				.0334	.0418		
.808			.0259				
.834	-.0537						
.850				.0459	.0743	.0923	
.857			.0276				
.865	.0244						
.900	.0257			.0626			.0859
.905			.0334		.1052		
.950				.0644		.1112	
.953			.0265				
.965	-.0074						

ARC11-716 IA14 O1+T12+S12N25+AT11 UPPER WING (RB1U35)

ALPHAO(4) = 4.010 BETAO (4) = 5.100

SECTION (1)UPPER WING DEPENDENT VARIABLE CP

X/CW \ Y/BW	.2990	.3640	.4270	.5340	.6730	.7800	.8870
.000	-.2400	-.1737	.1102	.4020	.3524	.2833	.2564
.020				-.1414	-.2553	-.3608	-.5187
.025			-.1195				
.040		-.0384					
.045			-.1970				
.050	-.1324			-.3751	-.4835	-.5922	-.7784
.080				-.5297			
.085			-.3202				
.086		-.0382					
.094	-.1020						
.150				-.6286	-.7438	-.8151	-.8332
.163		.0000					
.177			-.4928				
.193		-.1943					
.229	-.0392						
.250				-.6135	-.7773	-.9126	-.9129
.274			-.4843				
.339		-.4139					
.362	-.1452						
.400				-.4504	-.5679		-.5168
.402			-.4476				
.497	.0000						
.550				-.2765	-.3379		
.565			.0000				
.600							-.2891
.650						-.2162	
.700	-.2162				-.1699		
.725				-.1134			
.750						.0163	-.0215
.760			-.1308				
.775				.0038	.0121		
.808			-.0435				
.834	-.1288						
.850				.0240	.0498	.0774	
.857			-.0330				
.861	-.0591						
.900	-.0413			.0383			.0883
.905			-.0253		.0782		
.950				.0423		.1005	
.953			-.0245				
.965	-.0596						

ARC11-716 IA14 O1+T12+S12N25+AT11 UPPER WING (RB1U35)

ALPHAO(4) = 4.000 BETAO (5) = 8.160

SECTION (1)UPPER WING DEPENDENT VARIABLE CP

Y/BW	.2990	.3640	.4270	.5340	.6730	.7800	.8870
X/CW							
.000	-.3008	-.1315	-.0112	.2431	.3219	.2490	.2316
.020				-.1495	-.2113	-.3087	-.4518
.025			-.1272				
.040		-.0632					
.045			-.1675				
.050	-.1789			-.3132	-.4187	-.5213	-.7066
.080				-.4399			
.085			-.2425				
.086		-.0568					
.094	-.1653						
.150				-.5343	-.6480	-.7294	-.7649
.163		.0000					
.177			-.3528				
.193		-.1782					
.229	-.0332						
.250				-.5129	-.6971	-.8188	-.8410
.274			-.4037				
.339		-.3661					
.362	-.1282						
.400				-.4051	-.5396		-.5158
.402			-.4163				
.497	.0000						
.550				-.2682	-.3525		
.565			.0000				
.600							-.2762
.650						-.2294	
.700	-.2400				-.1889		
.725				-.1205			
.750						.0017	-.0136
.760			-.1654				
.775				-.0302	-.0155		
.808			-.0864				
.834	-.1608						
.850				-.0075	.0267	.0617	
.857			-.0762				
.865	-.0929						
.900	-.0713			.0095			.0854
.905			-.0567		.0521		
.950				.0150		.0872	
.953			-.0498				
.965	-.0753						

ARC11-716 IA14 O1+T12+S12N25+AT11 UPPER WING (RB1U35)

ALPHAO(5) = 7.930 BETAO (1) = -8.040

SECTION (1)UPPER WING DEPENDENT VARIABLE CP

X/CW \ Y/SW	.2990	.3640	.4270	.5340	.6730	.7800	.8870
.000	-.0460	-.0585	.3089	.5208	.3875	.2234	.1448
.020				-.5765	-.7804	-1.0300	-1.2280
.025			-.3283				
.040		-.0271					
.045			-.5026				
.050	-.1111			-.8924	-1.1090	-1.2810	-1.4750
.080				-1.1150			
.085			-.7369				
.086		-.0867					
.094	-.0819						
.150				-1.3800	-1.5230	-1.3830	-1.2670
.163		.0000					
.177			-.9478				
.193		-.4579					
.229	-.0298						
.250				-1.4090	-1.3420	-1.0250	-.8788
.274			-.8455				
.339		-.7934					
.362	-.2721						
.400				-.4794	-.7723		-.6930
.402			-.3966				
.497	.0000						
.550				-.2332	-.4161		
.565			.0000				
.600							-.4792
.650						-.4023	
.700	-.0671				-.1675		
.725				-.0747			
.750						-.2594	-.3633
.760			-.0651				
.775				.0296	-.0376		
.808			.0417				
.834	.0291						
.850				.0428	.0333	-.1485	
.857			.0701				
.865	.1299						
.900	.1215			.0537			-.2360
.905			.0838		.0983		
.950				.0509		-.0476	
.953			.0740				
.965	.0560						

ARC11-716 IA14 O1+T12+S12N25+AT11 UPPER WING (RB1U35)

ALPHAO(5) = 7.940 BETAO (2) = -4.000

SECTION (1)UPPER WING DEPENDENT VARIABLE CP

Y/BW	.2990	.3640	.4270	.5340	.6730	.7800	.8870
X/CW							
.000	-.1212	-.1014	.2747	.4985	.3754	.2017	.0907
.020				-.4994	-.7159	-.9846	-1.2230
.025			-.2762				
.040		-.0313					
.045			-.4354				
.050	-.1403			-.7990	-1.0470	-1.2240	-1.4980
.080				-1.0390			
.085			-.6438				
.086		-.0714					
.094	-.1048						
.150				-1.2100	-1.4630	-1.5040	-1.4450
.163		.0000					
.177			-.8226				
.193		-.4070					
.229	-.0358						
.250				-1.0530	-1.4340	-1.3570	-1.2030
.274			-.7877				
.339		-.7094					
.362	-.2532						
.400				-.4700	-.5014		-.7229
.402			-.4790				
.497	.0000						
.550				-.2134	-.2745		
.565			.0000				
.600							-.4238
.650						-.2439	
.700	-.1159				-.3397		
.725				-.0606			
.750						-.0880	-.2478
.760			-.0650				
.775				.0421	.0398		
.800			.0323				
.834	-.0015						
.850				.0624	.0847	.0036	
.857			.0515				
.865	.0930						
.900	.0907			.0747			-.0879
.905			.0631		.1133		
.950				.0744		.0599	
.953			.0594				
.965	.0415						

ARC11-71G IA14 D1+T12+S12N25+AT11 UPPER WING (RB1U35)

ALPHAO(5) = 7.940 BETAO (3) = .030

SECTION (1)UPPER WING DEPENDENT VARIABLE CP

Y/BW	.2990	.3640	.4270	.5340	.6730	.7800	.8870
X/CW							
.000	-.2008	-.1737	.2089	.4481	.3532	.1790	.0585
.020				-.4353	-.6517	-.9357	-1.1840
.025			-.2490				
.040		-.0543					
.045			-.3842				
.050	-.1647			-.7163	-.9679	-1.1600	-1.4530
.080				-.9269			
.085			-.5569				
.086		-.0720					
.094	-.1202						
.150				-1.0410	-1.3080	-1.4280	-1.4590
.163		.0000					
.177			-.7373				
.193		-.3580					
.229	-.0448						
.250				-.9407	-1.2180	-1.3900	-1.3390
.274			-.7074				
.339		-.6276					
.362	-.2289						
.400				-.5096	-.5399		-.6003
.402			-.5151				
.497	.0000						
.550				-.2434	-.2893		
.565			.0000				
.600							-.3401
.650						-.1832	
.700	-.1713				-.1322		
.725				-.0662			
.750						.0044	-.1251
.760			-.0766				
.775				.0257	.0371		
.808			.0062				
.834	-.0554						
.850				.0453	.0739	.0701	
.857			.0234				
.865	.0383						
.900	.0533			.0583			.0201
.905			.0395		.1068		
.950				.0692		.0968	
.953			.0403				
.965	.0152						

ARC11-716 IA14 O1+T12+S12N25+AT11 UPPER WING (RB1U35)

ALPHAO(5) = 7.930 BETAO (4) = 4.110

SECTION (1)UPPER WING DEPENDENT VARIABLE CP

Y/SW	.2990	.3640	.4270	.5340	.6730	.7800	.8870
X/CW							
.000	-.3369	-.3110	.0727	.3767	.3098	.1665	.0396
.020				-.4051	-.5883	-.8523	-1.1260
.025			-.2728				
.040		-.1090					
.045			-.3762				
.050	-.1846			-.6491	-.8690	-1.0670	-1.3780
.080				-.8271			
.085			-.5182				
.036		-.1037					
.094	-.1399						
.150				-.8677	-1.1230	-1.2500	-1.3780
.163		.0000					
.177			-.6515				
.193		-.3144					
.229	-.0687						
.250				-.8979	-1.1000	-1.2860	-1.2450
.274			-.6362				
.339		-.5408					
.362	-.2130						
.400				-.5529	-.5778		-.5304
.402			-.5291				
497	.0000						
.550				-.3062	-.3131		
.565			.0000				
.600							-.3350
.650						-.2061	
.700	-.2189				-.1561		
.725				-.1258			
.750						.0061	-.0787
.760			-.1208				
.775				-.0185	.0197		
.800			-.0262				
.834	-.1020						
.850				.0062	.0573	.0705	
.857			-.0120				
.865	-.0277						
.900	-.0217			.0249			.0471
.905			-.0012		.0092		
.950				.0297		.0961	
.953			.0001				
.965	-.0390						

ARC11-716 IA14 01+T12+S12N25+AT11 UPPER WING (RB1U35)

ALPHAO (5) = 7.920 BETAO (5) = 8.180

SECTION (11UPPER WING DEPENDENT VARIABLE CP

Y/BW	.2990	.3640	.4270	.5340	.6730	.7800	.8870
X/CW							
.000	-.4261	-.2311	-.1669	.2015	.2865	.1591	.0414
.020				-.3799	-.4952	-.7239	-1.0230
.025			-.2765				
.040		-.1319					
.045			-.3131				
.050	-.2331			-.5471	-.7395	-.9320	-1.2260
.080				-.6613			
.085			-.3666				
.086		-.1334					
.094	-.2352						
.150				-.7052	-.9073	-1.0640	-1.1660
.165		.0000					
.177			-.4505				
.193		-.2696					
.229	-.1200						
.250				-.6373	-.9060	-1.1050	-1.0420
.274			-.4827				
.339		-.4387					
.362	-.1858						
.400				-.4456	-.5860		-.5095
.402			-.4452				
.497	.0000						
.550				-.2742	-.3295		
.565			.0000				
.600							-.3152
.650						-.2150	
.700	-.2407				-.1814		
.725				-.1265			
.750						.0060	-.0575
.760			-.1661				
.775				-.0442	-.0076		
.808			-.0909				
.834	-.1500						
.850				-.0152	.0308	.0640	
.857			-.0736				
.865	-.0858						
.900	-.0693			.0064			.0658
.905			-.0544		.0570		
.950				.0180		.0904	
.953			-.0467				
.965	-.0748						

ARC11-716 IA14 O1+T12+S12N25+AT11 UPPER WING (RB1U36) (15 FEB 74)

REFERENCE DATA

SREF = 2.4210 SQ.FT. XMRP = 29.5800 INCHES
LREF = 38.7090 INCHES YMRP = .0000 INCHES
BREF = 38.7090 INCHES ZMRP = .0000 INCHES
SCALE = .0300 SCALE

ALPHAO(1) = -8.120 BETAO (1) = -8.000

PARAMETRIC DATA

MACH = .850 ELEVON = .000
RUDDER = .000 SPOBRK = .000

SECTION (1)UPPER WING DEPENDENT VARIABLE CP

Y/BW	.2990	.3640	.4270	.5340	.6730	.7800	.8870
X/CW							
.000	.0441	.0700	.2950	.3340	.2169	.1219	.1583
.020				.5101	.0000	.5001	.4689
.025			.4134				
.040		.2364					
.045			.3370				
.050	.0927			.2944	.3020	.2984	.2503
.080				.1196			
.085			.1915				
.086		.2942					
.094	.1045						
.150				-.1044	-.0469	-.0770	-.1063
.163		.0000					
.177			-.0268				
.193		.1556					
.229	.1730						
.250				-.2397	-.2626	-.3210	-.3793
.274			-.1345				
.339		-.1052					
.362	.1253						
.400				-.1792	-.2877		-.3950
.402			-.1553				
.497	.0000						
.550				-.0959	-.1735		
.565			.0000				
.600							-.2213
.650						-.1412	
.700	.0866				-.1536		
.725				-.0289			
.750						.1106	.0496
.760			-.0348				
.775				.1312	.1097		
.808			.1233				
.834	.0334						
.850				.0942	.1181	.1276	
.857			.0963				
.865	.1438						
.900	.1006			.0926			.1050
.905			.0735		.0928		

ARC11-716 IA14 O1+T12+S12N25+AT11 UPPER WING (RB1U35)

ALPHAO(1) = -8.120 BETAO (1) = -8.000

SECTION (1)UPPER WING DEPENDENT VARIABLE CP

X/CW \ Y/BW	.2990	.3640	.4270	.5340	.6730	.7800	.8870
.950				.0452		.1204	
.953			.0269				
.965	.0004						

ALPHAO(1) = -8.110 BETAO (2) = -3.970

SECTION (1)UPPER WING DEPENDENT VARIABLE CP

X/CW \ Y/BW	.2990	.3640	.4270	.5340	.6730	.7800	.8870
.000	.0075	.0146	.2150	.2274	.0812	-.0226	.0180
.020				.4971	.0000	.4556	.4129
.025			.3834				
.040		.1908					
.045			.3311				
.050	.0576			.3032	.3024	.3008	.2337
.080				.1497			
.085			.2114				
.086		.2660					
.094	.0717						
.150				-.0675	-.0524	-.0409	-.1061
.163		.0000					
.177			-.0025				
.193		.1670					
.229	.1507						
.250				-.2147	-.2294	-.2856	-.3651
.274			-.1115				
.339		-.0912					
.362	.1326						
.400				-.2012	-.3016		-.3948
.402			-.1716				
.497	.0000						
.550				-.1550	-.2206		
.565			.0000				
.600							-.2391
.650						-.1783	
.700	.0032				-.1664		
.725				-.0785			
.750						.0776	.0237
.760			-.0904				
.775				.0879	.0763		
.800			.0721				
.834	-.0305						
.850				.0543	.0845	.1011	

ARC11-716 IA14 Q1+T12+S12N25+AT11 UPPER WING (RB1U36)

ALPHAO(1) = -8.110 BETAO (2) = -3.970

SECTION (1)UPPER WING DEPENDENT VARIABLE CP

Y/BW	.2990	.3640	.4270	.5340	.6730	.7800	.8870
X/CW							
.857			.0528				
.865	.0822						
.900	.0464			.0576			.0855
.905			.0387		.0612		
.950				.0297		.0929	
.953			.0027				
.965	-.0335						

ALPHAO(1) = -8.070 BETAO (3) = .010

SECTION (1)UPPER WING DEPENDENT VARIABLE CP

Y/BW	.2990	.3640	.4270	.5340	.6730	.7800	.8870
X/CW							
.000	-.0022	.0042	.1559	.1242	-.0532	-.1685	-.1167
.020				.4648	.0000	.4037	.3494
.025			.3459				
.040		.1505					
.045			.3075				
.050	.0323			.3017	.2901	.2778	.2042
.080				.1652			
.085			.2154				
.086		.2346					
.094	.0437						
.150				-.0440	-.0356	-.0310	-.1081
.163		.0000					
.177			.0227				
.193		.1634					
.229	.1326						
.250				-.1993	-.2131	-.2668	-.3556
.274			-.0944				
.339		-.0688					
.362	.1262						
.400				-.2206	-.3172		-.4106
.402			-.1900				
.497	.0000						
.550				-.2084	-.2675		
.565			.0000				
.600							-.2561
.650						-.2118	
.700	-.0938				-.1810		
.725				-.1262			
.750						.0418	.0045
.760			-.1410				

ARC11-716 IA14 O1+T12+S12N25+AT11 UPPER WING (R81U36)

ALPHAO(1) = -8.070 BETAO (3) = .010

SECTION (1)UPPER WING DEPENDENT VARIABLE CP

X/CW \ Y/BW	.2990	.3640	.4270	.5340	.6730	.7800	.8870
.775				.0427	.0374		
.808			.0225				
.834	-.0913						
.850				.0212	.0525	.0714	
.857			.0080				
.865	.0265						
.900	.0064			.0300			.0601
.905			.0075		.0469		
.950				.0028		.0706	
.953			-.0285				
.965	-.0641						

ALPHAO(1) = -8.080 BETAO (4) = 4.090

SECTION (1)UPPER WING DEPENDENT VARIABLE CP

X/CW \ Y/BW	.2990	.3640	.4270	.5340	.6730	.7800	.8870
.000	-.0181	.0232	.1209	.0394	-.1705	-.2976	-.2413
.020				.4272	.0000	.3336	.2729
.025			.3024				
.040		.1195					
.045			.2791				
.050	.0102			.2860	.2590	.2363	.1587
.080				.1676			
.085			.2119				
.086		.1966					
.094	.0299						
.150				-.0264	-.0373	-.0465	-.1343
.163		.0000					
.177			.0416				
.193		.1625					
.229	.1120						
.250				-.1675	-.2156	-.2743	-.3751
.274			-.0764				
.339		-.0592					
.362	.1217						
.400				-.2350	-.3516		-.4549
.402			-.2006				
.497	.0000						
.550				-.2642	-.3452		
.565			.0000				
.600							-.2737
.650						-.2519	

ARC11-716 IA14 O1+T12+S12N25+AT11 UPPER WING (RB1U36)

ALPHAO(1) = -8.080 BETAO (4) = 4.090

SECTION (1)UPPER WING DEPENDENT VARIABLE CP

Y/BW	.2990	.3640	.4270	.5340	.6730	.7800	.8870
X/CW							
.700	-.1230				-.1981		
.725				-.1616			
.750						.0197	-.0138
.760			-.1916				
.775				.0033	.0059		
.808			-.0247				
.834	-.1467						
.850				-.0059	.0277	.0579	
.857			-.0276				
.865	-.0301						
.900	-.0407			.0046			.0587
.905			-.0281		.0378		
.950				-.0087		.0653	
.953			-.0493				
.965	-.0808						

ALPHAO(1) = -8.100 BETAO (5) = 8.160

SECTION (1)UPPER WING DEPENDENT VARIABLE CP

Y/BW	.2990	.3640	.4270	.5340	.6730	.7800	.8870
X/CW							
.000	-.0619	.0029	.0639	-.0204	-.2669	-.4102	-.3636
.020				.3948	.0000	.2699	.2011
.025			.2767				
.040		.0818					
.045			.2605				
.050	-.0222			.2761	.2327	.1990	.1169
.080				.1655			
.085			.1995				
.086		.1642					
.094	.0017						
.150				-.0149	-.0366	-.0499	-.1552
.163		.0000					
.177			.0395				
.193		.1426					
.229	.0071						
.250				-.1656	-.2057	-.2667	-.3093
.274			-.0770				
.339		-.0679					
.362	.0083						
.400				-.2560	-.3699		-.4679
.402			-.2165				
.497	.0000						

ARC11-716 IA14 O1+T12+S12N25+AT11 UPPER WING (RB1U36)

ALPHAO(1) = -8.100 BETAO (5) = 8.160

SECTION (1)UPPER WING DEPENDENT VARIABLE CP

Y/BW	.2990	.3640	.4270	.5340	.6730	.7800	.8870
X/CW							
.550				-.3421	-.3831		
.565			.0000				
.600							-.2682
.650						-.2550	
.700	-.2028				-.2116		
.725				-.2035			
.750						.0001	-.0158
.760			-.2369				
.775				-.0228	-.0156		
.808			-.0527				
.834	-.1795						
.850				-.0246	.0141	.0469	
.857			-.0560				
.865	-.0783						
.900	-.0694			-.0038			.0669
.905			-.0440		.0391		
.950				-.0177		.0589	
.953			-.0620				
.965	-.0904						

ALPHAO(2) = -3.980 BETAO (1) = -8.050

SECTION (1)UPPER WING DEPENDENT VARIABLE CP

Y/BW	.2990	.3640	.4270	.5340	.6730	.7800	.8870
X/CW							
.000	.0704	.1549	.4218	.5222	.4537	.3898	.4113
.020				.3288	.0000	.3084	.2915
.025			.2970				
.040		.2260					
.045			.1871				
.050	.0560			.0620	.0473	.0414	-.0208
.080				-.1415			
.085			.0045				
.086		.2350					
.094	.0592						
.150				-.3557	-.3753	-.3554	-.3619
.165		.0000					
.177			-.2436				
.193		.0120					
.229	.1223						
.250				-.4740	-.5910	-.6143	-.6466
.274			-.3308				
.339		-.2868					

ARC11-716 IA14 O1+T12+S12N25+AT11 UPPER WING (RB1U36)

ALPHAO(2) = -3.980 BETAO (1) = -8.050

SECTION (1)UPPER WING DEPENDENT VARIABLE CP

Y/BW	.2990	.3640	.4270	.5340	.6730	.7800	.8870
X/CW							
.362	.0214						
.400				-.2933	-.4443		-.6935
.402			-.2886				
.497	.0000						
.550				-.1424	-.2102		
.565			.0000				
.600							-.2393
.650						-.1516	
.700	.0135				-.1622		
.725				-.0287			
.750						.1019	.0228
.760			-.0253				
.775				.1281	.1055		
.808			.1165				
.834	.0214						
.850				.0966	.1088	.1238	
.857			.0900				
.865	.1328						
.900	.0943			.0922			.1047
.905			.0738		.0833		
.950				.0567		.0960	
.953			.0277				
.965	.0014						

ALPHAO(2) = -3.980 BETAO (2) = -3.990

SECTION (1)UPPER WING DEPENDENT VARIABLE CP

Y/BW	.2990	.3640	.4270	.5340	.6730	.7800	.8870
X/CW							
.000	.0240	.1046	.3548	.4194	.3367	.2517	.2838
.020				.3401	.0000	.3061	.2761
.025			.2983				
.040		.1932					
.045			.1990				
.050	.0204			.0967	.0815	.0725	.0086
.080				-.0916			
.085			.0360				
.088		.2177					
.094	.0333						
.150				-.2966	-.3108	-.3049	-.3384
.163		.0000					
.177			-.1971				
.193		.0364					

ARC11-713 IA14 O1+T12+S12N25+AT11 UPPER WING (RB1U36)

ALPHAD(2) = -3.980 BETAD (2) = -3.990

SECTION (1)UPPER WING DEPENDENT VARIABLE CP

Y/BW	.2990	.3640	.4270	.5340	.6730	.7800	.8870
X/CW							
.229	.1044						
.250				-.4110	-.4529	-.5515	-.6202
.274			-.2939				
.339		-.2499					
.362	.0341						
.400				-.3163	-.4524		-.6615
.402			-.3030				
.497	.0000						
.550				-.2049	-.2655		
.565			.0000				
.600							-.2543
.650						-.1831	
.700	-.0442				-.1621		
.725				-.0784			
.750						.0755	.0096
.760			-.0872				
.775				.0844	.0724		
.808			.0645				
.834	-.0325						
.850				.0626	.0818	.0990	
.857			.0501				
.865	.0735						
.900	.0439			.0652			.0963
.905			.0402		.0624		
.950				.0419		.0804	
.953			.0144				
.965	-.0209						

ALPHAD(2) = -3.990 BETAD (3) = .060

SECTION (1)UPPER WING DEPENDENT VARIABLE CP

Y/BW	.2990	.3640	.4270	.5340	.6730	.7800	.8870
X/CW							
.000	-.0057	.0760	.2885	.3184	.1977	.1175	.1540
.020				.3380	.0000	.2854	.2462
.025			.2712				
.040		.1601					
.045			.1905				
.050	.0013			.1159	.0985	.0811	.0081
.080				-.0433			
.085			.0627				
.086		.1934					
.094	.0129						

ARC11-716 IA14 D1+T12+S12N25+AT11 UPPER WING (RB1U36)

ALPHAO(2) = -3.990 BETAO (3) = .060

SECTION (1)UPPER WING DEPENDENT VARIABLE CP

Y/BW	.2990	.3640	.4270	.5340	.6730	.7800	.8870
X/CW							
.150				-.2382	-.2546	-.2658	-.3287
.163		.0000					
.177			-.1489				
.193		.0510					
.229	.0902						
.250				-.3669	-.4068	-.4987	-.5960
.274			-.2448				
.339		-.2080					
.362	.0437						
.400				-.3344	-.4628		-.6419
.402			-.3066				
.497	.0000						
.550				-.2784	-.3315		
.565			.0000				
.600							-.2646
.650						-.2105	
.700	-.1093				-.1721		
.725				-.1285			
.750						.0521	.0024
.760			-.1342				
.775				.0406	.0430		
.808			.0185				
.834	-.0964						
.850				.0295	.0580	.0026	
.857			.0076				
.865	.0086						
.900	-.0084			.0360			.0882
.905			.0066		.0556		
.950				.0226		.0741	
.953			-.0128				
.965	-.0579						

ALPHAO(2) = -3.990 BETAO (4) = 4.070

SECTION (1)UPPER WING DEPENDENT VARIABLE CP

Y/BW	.2990	.3640	.4270	.5340	.6730	.7800	.8870
X/CW							
.000	-.0479	.0505	.2379	.2536	.1110	.0196	.0538
.020				.3010	.0000	.2402	.1932
.025			.2245				
.040		.1146					
.045			.1671				
.050	-.0238			.1096	.0063	.0624	-.0184

ARC11-716 IA14 D1+T12+S12N25+AT11 UPPER WING (RB1U36)

ALPHA3(2) = -3.990 BETA0 (4) = 4.070

SECTION (1)UPPER WING DEPENDENT VARIABLE CP

Y/BW	.2990	.3640	.4270	.5340	.6730	.7800	.8870
X/CW							
.080				-.0238			
.085			.0608				
.086		.1566					
.094	-.0034						
.150				-.2104	-.2360	-.2484	-.3328
.163		.0000					
.177			-.1195				
.193		.0486					
.229	.0739						
.250				-.3121	-.3917	-.4685	-.5803
.274			-.2225				
.339		-.1876					
.362	.0358						
.400				-.3252	-.4776		-.6601
.402			-.3156				
.497	.0000						
.550				-.3257	-.4379		
.565			.0000				
.600							-.2569
.650						-.2293	
.700	-.1855				-.1870		
.725				-.1480			
.750						.0293	-.0068
.760			-.1806				
.775				.0128	.0149		
.808			-.0320				
.834	-.1567						
.850				.0138	.0406	.0707	
.857			-.0323				
.865	-.0476						
.900	-.0512			.0226			.0807
.905			-.0263		.0460		
.950				.0186		.0732	
.953			-.0454				
.965	-.0823						

ARC11-716 IA14 O1+T12+S12N25+AT11 UPPER WING (RB1U36)

ALPHAO(2) = -4.000 BETAO (5) = 8.110

SECTION (1)UPPER WING DEPENDENT VARIABLE CP

Y/BW	.2990	.3640	.4270	.5340	.6730	.7800	.8870
X/CW							
.000	-.0935	.0138	.0949	.1756	.0321	-.0892	-.0559
.020				.2715	.0000	.2123	.1524
.025			.1472				
.040		.0519					
.045			.1269				
.050	-.0580			.1213	.0997	.0592	-.0249
.080				.0074			
.085			.0759				
.086		.0976					
.094	-.0347						
.150				-.1654	-.2046	-.2205	-.3112
.163		.0000					
.177			-.0736				
93		.0519					
.229	.0493						
.250				-.2904	-.3587	-.4326	-.5542
.274			-.1861				
.339		-.1607					
.362	.0255						
.400				-.3445	-.4770		-.6713
.402			-.2991				
.497	.0000						
.550				-.4048	-.5307		
.565			.0000				
.600							-.2330
.650						-.2267	
.700	-.2494				-.2074		
.725				-.2021			
.750						.0216	-.0022
.760			-.2140				
.775				-.0650	-.0058		
.800			-.0793				
.834	-.2086						
.850				-.0372	.0212	.0598	
.857			-.0651				
.865	-.1062						
.900	-.0907			-.0192			.0820
.905			-.0483		.0363		
.950				-.0220		.0695	
.953			-.0602				
.965	-.0905						

ARC11-716 IA14 O1+T12+S12N25+AT11 UPPER WING (RB1U36)

ALPHAO(3) = -.310 BETAO (1) = -8.050

SECTION (1)UPPER WING DEPENDENT VARIABLE CP

X/CW \ Y/BW	.2990	.3640	.4270	.5340	.6730	.7800	.8870
.000	.0510	.1444	.4417	.6058	.5761	.5327	.5321
.020				.1147	.0000	.0225	-.0207
.025			.1489				
.040		.1779					
.045			.0137				
.050	.0045			-.1784	-.2427	-.2754	-.3630
.080				-.3958			
.085			-.1883				
.085		.1604					
.094	.0120						
.150				-.6164	-.6768	-.6591	-.6341
.163		.0000					
.177			-.4383				
.193		-.1113					
.229	.0823						
.250				-.6806	-.7783	-.8904	-.8818
.274			-.4863				
.339		-.4715					
.362	-.0612						
.400				-.3785	-.5619		-.9549
.402			-.3952				
.497	.0000						
.550				-.1471	-.1893		
.565			.0000				
.600							-.1842
.650						-.0875	
.700	-.0145				-.1569		
.725				-.0041			
.750						.1086	.0258
.760			.0029				
.775				.1300	.1143		
.808			.1186				
.834	.0367						
.850				.1128	.1285	.1352	
.857			.0992				
.865	.1439						
.900	.1205			.1087			.1184
.905			.0922		.1081		
.950				.0781		.1222	
.953			.0533				
.985	.0359						

ARC11-716 IA14 O1+T12+S12N25+AT11 UPPER WING (R01U36)

ALPHAO(3) = -.320 BETAO (2) = -3.990

SECTION (1)UPPER WING DEPENDENT VARIABLE CP

Y/BW	.2990	.3640	.4270	.5340	.6730	.7800	.8870
X/CW							
.000	.0028	.1550	.3918	.5312	.4947	.4478	.4477
.020				.1354	.0000	.0398	-.0104
.025			.1528				
.040		.1561					
.045			.0337				
.050	-.0189			-.1386	-.1956	-.2323	-.3244
.080				-.3421			
.085			-.1437				
.086		.1499					
.094	-.0093						
.150				-.5352	-.5973	-.5923	-.6070
.163		.0000					
.177			-.3856				
.193		-.0901					
.229	.0650						
.250				-.6363	-.7416	-.8239	-.8484
.274			-.4707				
.339		-.4133					
.362	-.0549						
.400				-.4113	-.5319		-.9330
.402			-.4252				
.497	.0000						
.550				-.2283	-.2481		
.565			.0000				
.600							-.1960
.650						-.1424	
.700	-.0781				-.1548		
.725				-.0569			
.750						.0855	.0161
.760			-.0564				
.775				.0870	.0827		
.808			.0743				
.834	-.0241						
.850				.0774	.0970	.1143	
.857			.0619				
.865	.0775						
.900	.0826			.0795			.1030
.905			.0549		.0796		
.950				.0604		.0997	
.953			.0291				
.965	-.0001						

ARC11-716 IA14 O1+T12+S12N25+AT11 UPPER WING (RB1U36)

ALPHAO(3) = -.330 BETAO (3) = .040

SECTION (1)UPPER WING DEPENDENT VARIABLE CP

X/CW \ Y/BW	.2990	.3640	.4270	.5340	.6730	.7800	.8870
.000	-.0537	.0557	.3320	.4536	.3958	.3470	.3584
.020				.1491	.0000	.0539	.0003
.025			.1448				
.040		.1245					
.045			.0414				
.050	-.3470			-.1020	-.1587	-.1979	-.3012
.080				-.2803			
.085			-.1121				
.086		.1309					
.094	-.0295						
.150				-.4705	-.5195	-.5377	-.5732
.163		.0000					
.177			-.3288				
.193		-.0726					
.229	.0506						
.250				-.6440	-.6710	-.7656	-.8115
.274			-.4119				
.339		-.3621					
.352	-.0422						
.400				-.5000	-.5789		-.9470
.402			-.4405				
.497	.0000						
.550				-.3805	-.3539		
.565			.0000				
.600							-.1962
.650						-.1703	
.700	-.1562				-.1572		
.725				-.1502			
.750						.0708	.0140
.760			-.1206				
.775				.0111	.0596		
.808			.0211				
.834	-.0878						
.850				.0068	.0764	.1023	
.857			.0176				
.865	.0058						
.900	.0022			.0176			.0997
.905			.0191		.0662		
.950				.0081		.0905	
.953			.0004				
.965	-.0380						

ARC11-716 IA14 OX+T12+S12N25+AT11 UPPER WING (RB1U36)

ALPHAO(3) = -.330 BETAO (4) = 8.130

SECTION (1)UPPER WING DEPENDENT VARIABLE CP

Y/BW	.2990	.3640	.4270	.5340	.6730	.7800	.8870
X/CW							
.000	-.1872	-.0333	.0842	.2493	.2443	.1676	.1842
.020				.0955	.0000	.0497	-.0120
.025			.0290				
.040		.0080					
.045			-.0088				
.050	-.1146			-.0655	-.0994	-.1514	-.2568
.080				-.1831			
.085			-.0677				
.086		.0191					
.094	-.0722						
.150				-.3246	-.3864	-.4267	-.5196
163		.0000					
.177			-.1932				
.193		-.0385					
.229	.0098						
.250				-.4204	-.5062	-.6178	-.7318
.274			-.2813				
.339		-.2463					
.362	-.0369						
.400				-.4204	-.5718		-.8153
.402			-.3587				
.497	.0000						
.550				-.4425	-.5864		
.565			.0000				
.600							-.1735
.650						-.2035	
.700	-.2839				-.2097		
.725				-.2087			
.750						.0410	.0131
.760			-.2182				
.775				-.0891	-.0004		
.800			-.1065				
.834	-.2162						
.850				-.0477	.0247	.0663	
.857			-.0744				
.865	-.1315						
.900	-.1007			-.0310			.0919
.905			-.0591		.0349		
.950				-.0307		.0676	
.953			-.0599				
.965	-.0091						

ARC11-716 IA14 O1+T12+S12N25+AT11 UPPER WING (RB1U36)

ALPHAO(4) = 3.810 BETAO (1) = -4.010

SECTION (1)UPPER WING DEPENDENT VARIABLE CP

Y/BW	.2990	.3640	.4270	.5340	.6730	.7800	.8870
X/CW							
.000	-.0501	.0274	.3682	.5691	.5230	.4450	.4042
.020				-.1090	.0000	-.3379	-.4600
.025			-.0167				
.040		.0860					
.045			-.1545				
.050	-.0772			-.3863	-.5192	-.6100	-.7596
.080				-.6109			
.085			-.3470				
.086		.0650					
.094	-.0524						
.150				-.8246	-.9428	-.9350	-.9606
.163		.0000					
.177			-.5756				
.193		-.2140					
.229	.0295						
.250				-.9589	-1.0460	-1.0820	-.9182
.274			-.6722				
.339		-.5921					
.362	-.1255						
.400				-.7159	-1.0270		-.7090
.402			-.6807				
.497	.0000						
.550				-.2280	-.2569		
.565			.0000				
.600							-.4899
.650						-.3748	
.700	-.1126				-.1536		
.725				-.0834			
.750						-.1527	-.3117
.760			-.0342				
.775				.0300	.0372		
.808			.0618				
.834	-.0181						
.850				.0586	.0855	-.0048	
.857			.0623				
.865	.0255						
.900	.0853			.0472			-.1618
.905			.0597		.1061		
.950				.0419		.0750	
.953			.0443				
.965	.0249						

ARC11-716 IA14 O1+T12+S1GN2S+AT11 UPPER WING (RB1U36)

ALPHAO(4) = 3.010 BETAO (2) = .040

SECTION (1)UPPER WING DEPENDENT VARIABLE CP

Y/BW	.2990	.3640	.4270	.5540	.6730	.7800	.8870
X/CW							
.000	-.1197	-.0397	.3108	.5035	.4597	.3882	.3481
.020				-.0805	.0000	-.3128	-.4488
.025			-.0124				
.040		.0642					
.045			-.1344				
.050	-.0993			-.3426	-.4757	-.5762	-.7242
.080				-.5366			
.085			-.3001				
.086		.0566					
.094	-.0659						
.150				-.7432	-.8639	-.8808	-.9077
.163		.0000					
.177			-.5094				
.193		-.1888					
.229	.0207						
.250				-.7690	-.9162	-1.0610	-1.0470
.274			-.5976				
.339		-.5407					
.362	-.1115						
.400				-.6199	-.9972		-.7978
.422			-.6159				
.497	.0000						
.550				-.3006	-.2696		
.565			.0000				
.600							-.4537
.650						-.2068	
.700	-.1910				-.1577		
.725				-.0867			
.750						.0138	-.2151
.760			-.0782				
.775				.0353	.0447		
.808			.0210				
.834	-.0798						
.850				.0458	.0745	.0891	
.857			.0310				
.865	.0202						
.900	.0276			.0569			-.0381
.905			.0328		.0910		
.950				.0492		.1085	
.953			.0205				
.965	-.0103						

ARC11-716 IA14 O1+T12+S12N25+AT11 UPPER WING (RB1U36)

ALPHAO(4) = 3.800 BETAO (3) = 4.090

SECTION (1)UPPER WING DEPENDENT VARIABLE CP

Y/BW	.2990	.3640	.4270	.5340	.6730	.7800	.8870
X/CW							
.00	-.2120	-.1140	.1760	.4347	.3905	.3164	.2926
.020				-.0779	.0000	-.2958	-.4288
.025			-.0486				
.040		.0045					
.045			-.1394				
.050	-.1126			-.3117	-.4379	-.5361	-.6853
.060				-.4806			
.085			-.2691				
.086		.0145					
.094	-.0777						
.150				-.6314	-.7425	-.8111	-.8630
.163		.0000					
.177			-.4407				
.193		-.1614					
.220	.0029						
.250				-.6534	-.7899	-.9459	-1.0260
.274			-.4928				
.339		-.4331					
.362	-.1074						
.400				-.5572	-.8419		-1.0190
.402			-.5449				
.497	.0000						
.550				-.4312	-.5062		
.565			.0000				
.600							-.3460
.650						-.1615	
.700	-.2655				-.1756		
.725				-.1147			
.750						.0574	-.0197
.760			-.1370				
.775				.0212	.0428		
.809			-.0352				
.824	-.1461						
.850				.0290	.0710	.0961	
.857			-.0241				
.861	-.2620						
.900	-.0403			.0406			.0856
.905			-.0122		.0817		
.950				.0363		.1040	
.953			-.0272				
.965	-.0647						

ARC11-716 IA14 O1+T12+S12N25+AT11 UPPER WING (RB1U36)

ALPHAO(4) = 3.780 BETAO (4) = 8.160

SECTION (1)UPPER WING DEPENDENT VARIABLE CP

Y/BW	.2990	.3340	.4270	.5340	.6730	.7800	.8870
X/CW							
.000	-.2954	-.0938	.0085	.2272	.3516	.2714	.2521
.020				-.1175	.0000	-.2309	-.3498
.025			-.0908				
.040		-.0396					
.045			-.1398				
.050	-.1794			-.2692	-.3500	-.4448	-.5933
.080				-.3890			
.085			-.2020				
.086		-.0370					
.094	-.1652						
.150				-.4990	-.6178	-.6813	-.7766
.163		.0000					
.177			-.3158				
.193		-.1472					
.229	-.0199						
.250				-.5475	-.6666	-.8263	-.9314
.274			-.3814				
.339		-.3504					
.362	-.0956						
.400				-.5005	-.7379		-1.0210
.402			-.4255				
.497	.0000						
.550				-.4522	-.6160		
.555			.0000				
.600							-.2060
.650						-.1696	
.700	-.2945				-.2066		
.725				-.1865			
.750						.0577	.0404
.760			-.2049				
.775				-.0841	.0175		
.808			-.1244				
.834	-.2124						
.850				-.0429	.0390	.0878	
.857			-.0876				
.865	-.1336						
.900	-.1067			-.0298			.1061
.905			-.0665		.0437		
.950				-.0306		.0876	
.953			-.0623				
.965	-.0979						

ARC11-716 TA14 O1+T12+S12N25+AT11 UPPER WING (RB1U38)

ALPHAO(5) = 7.940 BETAO (1) = .030

SECTION (1)UPPER WING DEPENDENT VARIABLE CP

Y/BW	.2990	.3645	.4270	.5340	.6730	.7800	.8870
X/CW							
.000	-.2054	-.1526	.2590	.5012	.4321	.2898	.1891
.020				-.2801	.0000	-.6688	-.8625
.025			-.1573				
.040		-.0128					
.045			-.2890				
.050	-.1530			-.5473	-.7406	-.8959	-1.1130
.080				-.7492			
.085			-.4740				
.086		-.0226					
.094	-.1077						
.150				-.9542	-1.1360	-1.0980	-.9962
.163		.0000					
.177			-.6557				
.193		-.2818					
.229	-.0103						
.250				-1.0040	-1.1990	-.9065	-.9078
.274			-.7373				
.339		-.6471					
.362	-.1663						
.400				-.7685	-.7026		-.6705
.402			-.8289				
.497	.0000						
.550				-.2819	-.5853		
.565			.0000				
.600							-.5703
.650						-.5338	
.700	-.1923				-.1800		
.725				-.1597			
.750						-.4322	-.4780
.760			-.1197				
.775				-.0542	-.1917		
.808			-.0262				
.834	-.1010						
.850				-.0219	-.0873	-.2852	
.857			-.0127				
.865	.0046						
.900	.0274			.0042			-.4253
.905			.0044		.0442		
.950				.0259		-.1733	
.953			.0119				
.965	-.0051						

ARC11-716 IA14 O1+T12+S12N25+AT11 UPPER WING (RB1U36)

ALPHAO(5) = 7.930 BETAO (2) = 4.130

SECTION (1)UPPER WING DEPENDENT VARIABLE CP

Y/BW	.2990	.3640	.4270	.5340	.6730	.7800	.8870
X/CW							
.000	-.3441	-.2778	.1011	.4061	.3653	.2571	.1529
.020				-.2949	.0000	-.6379	-.8472
.025			-.2154				
.040		-.0758					
.045			-.3102				
.050	-.1688			-.5279	-.7012	-.8534	-1.0860
.080				-.7119			
.085			-.4437				
.086		-.0709					
.094	-.1241						
.150				-.8679	-1.0620	-1.1420	-1.1320
.163		.0000					
.177			-.6043				
.193		-.2489					
.229	-.0468						
.250				-.8593	-1.1050	-1.1650	-1.0770
.274			-.6619				
.339		-.5587					
.362	-.1756						
.400				-.7444	-1.0710		-.7775
.402			-.6761				
.497	.0000						
.550				-.3081	-.3972		
.565			.0000				
.600							-.6252
.650						-.4639	
.700	-.2750				-.1858		
.725				-.1426			
.750						-.2672	-.4649
.760			-.1385				
.774				-.0371	-.0558		
.800			-.0463				
.834	-.1464						
.850				-.0008	.0048	-.1030	
.857			-.0287				
.865	-.0566						
.900	-.0406			.0182			-.3203
.905			-.0207		.0565		
.950				.0260		.0108	
.953			-.0287				
.965	-.0548						

ARC11-716 IA14 O1+T12+S12N25+AT11 UPPER WING (RB1U3G)

ALPHAO(5) = 7.910 BETAO (3) = 8.190

SECTION (1)UPPER WING DEPENDENT VARIABLE CP

Y/BW	.2990	.3640	.4270	.5340	.6730	.7800	.8870
X/CW							
.000	-.4355	-.1795	-.1335	.2265	.3347	.2149	.1169
.020				-.3346	.0000	-.5891	-.8002
.025			-.2459				
.040		-.1140					
.045			-.2755				
.050	-.2354			-.4870	-.6557	-.7944	-1.0290
.080				-.6131			
.085			-.3331				
.086		-.1150					
.094	-.2431						
.150				-.6955	-.9327	-1.0170	-1.1380
.163		.0000					
.177			-.4317				
.193		-.2374					
.229	-.1160						
.250				-.6883	-.9105	-1.1360	-1.1980
.274			-.4925				
.339		-.4251					
.362	-.1614						
.400				-.5488	-.9035		-.9940
.402			-.4935				
.497	.0000						
.550				-.4162	-.4794		
.565			.0000				
.600							-.5105
.650						-.2084	
.700	-.2887				-.2102		
.725				-.1551			
.750						-.0016	-.2209
.760			-.1916				
.7[illegible]				-.0172	-.0181		
.808			-.1101				
.834	-.1871						
.850				-.0494	.0142	.0449	
.857			-.0943				
.865	-.1090						
.900	-.0831			-.0232			-.0027
.905			-.0733		.0419		
.950				-.0103		.0732	
.953			-.0699				
.965	-.0803						

ARC11-716 IA14 O1+T12+S12N25+AT11 UPPER WING (RB1U37) (15 FEB 74)

REFERENCE DATA

SREF = 2.4210 SQ.FT. XMRP = 29.5800 INCHES
LREF = 38.7090 INCHES YMRP = .0000 INCHES
BREF = 38.7090 INCHES ZMRP = .0000 INCHES
SCALE = .0300 SCALE

PARAMETRIC DATA

MACH = .950 ELEVON = .000
RUDDER = .000 SPDBRK = .000

ALPHAO(1) = -8.060 BETAO (1) = -3.980

SECTION (1)UPPER WING DEPENDENT VARIABLE CP

Y/BW	.2990	.3640	.4270	.5340	.6730	.7800	.8870
X/CW							
.000	.0703	.0980	.3050	.3454	.2107	.1014	.1391
.020				.5395	.4894	.4973	.4672
.025			.4413				
.040		.2508					
.045			.3857				
.050	.1116			.3493	.3452	.3417	.2924
.080				.1972			
.085			.2684				
.086		.3236					
.094	.1324						
.150				-.0125	.0055	.0155	-.0302
.163		.0000					
.177			.0616				
.193		.2229					
.229	.2083						
.250				-.2475	-.1724	-.2152	-.3046
.274			-.0552				
.339		-.0299					
.362	.1917						
.400				-.2235	-.2393		-.4421
.402			-.1245				
.497	.0000						
.550				-.2229	-.2668		
.565			.0000				
.603							-.4182
.650						-.3682	
.700	.0470				-.1986		
.725				-.1911			
.750						.1774	.1241
.760			-.0972				
.775				.0927	.1474		
.808			.1165				
.834	-.0365						
.850				.0510	.1355	.1555	
.857			.0927				
.865	.1145						
.900	.0867			.0401			.1257
.905			.0734		.0800		

ARC11-716 IA14 D1-T12+S12N25+AT11 UPPER WING (RB1U37)

ALPHAO(1) = -8.060 BETAO (1) = -3.980

SECTION (1)UPPER WING DEPENDENT VARIABLE CP

Y/BW	.2990	.3640	.4270	.5340	.6730	.7800	.8870
X/CW							
.950				-.0190		.0963	
.953			.0221				
.965	.0018						

ALPHAO(1) = -8.050 BETAO (2) = .040

SECTION (1)UPPER WING DEPENDENT VARIABLE CP

Y/BW	.2990	.3640	.4270	.5340	.6730	.7800	.8870
X/CW							
.000	.0559	.0945	.2546	.2460	.0741	-.0513	-.0147
.020				.5058	.4319	.4362	.3933
.023			.4033				
.040		.2176					
.045			.3622				
.050	.1043			.3424	.3241	.3130	.2619
.080				.2084			
.085			.2669				
.086		.2926					
.094	.1233						
.150				.0188	.0207	.0265	-.0367
.163		.0000					
.177			.0792				
.193		.2225					
.229	.1943						
.250				-.1597	-.1513	-.1895	-.2902
.274			-.0305				
.339		-.0115					
.362	.1891						
.400				-.1780	-.2426		-.4329
.402			-.1254				
.497	.0000						
.550				-.2162	-.3000		
.565			.0000				
.600							-.4691
.650						-.4216	
.700	-.0116				-.2302		
.725				-.3098			
.750						-.0464	-.0421
.760			-.2724				
.775				.0287	.0095		
.808			.0437				
.834	-.1793						
.850				.0182	.0582	.0673	

ARC11-716 IA14 O1+T12+S12N25+AT11 UPPER WING (RB1U37)

ALPHAO(1) = -8.050 BETAO (2) = .040

SECTION (4)UPPER WING DEPENDENT VARIABLE CP

Y/BW	.2990	.3640	.4270	.5340	.6730	.7800	.8870
X/CW							
.857			.0263				
.865	.0184						
.900	.0115			.0177			.0555
.905			.0180		.0254		
.950				-.0239		.0342	
.953			-.0178				
.965	-.0480						

ALPHAO(1) = -8.070 BETAO (3) = 4.090

SECTION (1)UPPER WING DEPENDENT VARIABLE CP

Y/BW	.2990	.3640	.4270	.5340	.6730	.7800	.8870
X/CW							
.000	-.1161	.1035	.2307	.1935	-.0061	-.1058	-.1339
.020				.4889	.4010	.3551	.3337
.025			.3578				
.040		.1811					
.045			.3297				
.050	-.0065			.3486	.3222	.2956	.2367
.080				.2307			
.085			.2604				
.086		.2379					
.094	.0455						
.150				.0533	.0452	.0404	-.0348
.163		.0000					
.177			.1018				
.193		.2026					
.229	.1678						
.250				-.1420	-.1211	-.1641	-.2781
.274			.0059				
.339		.0238					
.362	.1722						
.400				-.1938	-.2324		-.4269
.452			-.0984				
.497	.0000						
.550				-.2667	-.3065		
.563			.0000				
.600							-.5061
.650						-.4401	
.700	-.0982				-.2273		
.725				-.3656			
.750						-.3618	-.2988
.760			-.2826				

ARC11-716 IA14 O1+T12+S12N25+AF11 UPPER WING (RB1U37)

ALPHAO(1) = -8.070 BETAO (3) = 4.090

SECTION (1)UPPER WING DEPENDENT VARIABLE CP

Y/BW	.2990	.3640	.4270	.5340	.6730	.7800	.8870
X/CW							
.775				-.2279	-.2697		
.808			.1177				
.834	-.2240						
.850				-.1362	-.0686	-.0511	
.857			-.1063				
.865	-.1213						
.900	-.1099			-.0972			-.0107
.905			-.0887		-.0214		
.950				-.1074		-.0087	
.953			-.1008				
.965	-.1326						

ALPHAO(1) = -8.100 BETAO (4) = 8.150

SECTION (1)UPPER WING DEPENDENT VARIABLE CP

Y/BW	.2990	.3640	.4270	.5340	.6730	.7800	.8870
X/CW							
.000	-.2575	.0342	.0977	.1506	-.0833	-.2472	-.2471
.020				.4428	.3705	.3524	.2810
.025			.2807				
.040		.0770					
.045			.2795				
.050	-.1383			.3313	.3155	.2822	.2163
.080				.2356			
.085			.2390				
.086		.1708					
.094	-.0526						
.150				.0771	.0694	.0569	-.0295
.163		.0000					
.177			.1110				
.193		.1790					
.229	.1197						
.250				-.0629	-.0885	-.1352	-.2574
.274			.0220				
.339		.0156					
.362	.1302						
.400				-.1428	-.2186		-.4170
.402			-.0968				
.497	.0000						
.550				-.2396	-.3129		
.565			.0000				
.600							-.5316
.650						-.4555	

ARC11-716 IA14 O1+T12+S12N25+AT11 UPPER WING (RB1U37)

ALPHAO(1) = -8.100 BETAO (4) = 8.150

SECTION 1)UPPER WING DEPENDENT VARIABLE CP

Y/BW	.2990	.3640	.4270	.5340	.6730	.7800	.8870
X/CW							
.700	-.1103				-.2407		
.725				-.3415			
.750						-.4027	-.4325
.760			-.2997				
.775				-.2499	-.3285		
.808			-.1934				
.834	-.2500						
.850				-.1884	-.1953	-.2135	
.857			-.1801				
.865	-.1866						
.900	-.1773			-.1470			-.0989
.905			-.1565		-.0697		
.950				-.1320		-.0572	
.953			-.1547				
.965	-.1897						

ALPHAO(2) = -4.090 BETAO (1) = -8.040

SECTION (1)UPPER WING DEPENDENT VARIABLE CP

Y/BW	.2990	.3640	.4270	.5340	.6730	.7800	.8870
X/CW							
.000	.0774	.1988	.4789	.5794	.5130	.4594	.4790
.020				.3927	.3602	.3636	.3495
.025			.3547				
.040		.2782					
.045			.2502				
.050	.0740			.1354	.1086	.1145	.0593
.080				-.0700			
.085			.0739				
.086		.2897					
.094	.0896						
.150				-.2975	-.3099	-.2776	-.2838
.163		.0000					
.177			-.1768				
.193		.0845					
.229	.1695						
.250				-.4824	-.4870	-.5274	-.5414
.274			-.2815				
.339		-.2545					
.362	.0927						
.400				-.3692	-.6128		-.7812
.402			-.3678				
.497	.0000						

ARC11-716 IA14 01+T12+S12N25+AT11 UPPER WING (RB1037)

ALPHAO(2) = -4.090 BETAO (1) = -8.040

SECTION (1)UPPER WING DEPENDENT VARIABLE CP

Y/BW	.2990	.3640	.4270	.5340	.6730	.7800	.8870
X/CW							
.550				-.2033	-.3272		
.565			.0000				
.600							-.6993
.650						-.2479	
.700	.0428				-.1779		
.725				-.0612			
.750						.2126	.1470
.760			-.0149				
.775				.1449	.1709		
.808			.1466				
.834	.0253						
.850				.1046	.1520	.1710	
.857			.1279				
.865	.1631						
.900	.1351			.0840			.1249
.905			.1006		.0794		
.950				.0155		.0922	
.953			.0369				
.965	.0387						

ALPHAO(2) = -4.080 BETAO (2) = -4.020

SECTION (1)UPPER WING DEPENDENT VARIABLE CP

Y/BW	.2990	.3640	.4270	.5340	.6730	.7800	.8870
X/CW							
.000	.0596	.1690	.4216	.4928	.4039	.3372	.3646
.020				.4029	.3586	.3662	.3388
.025			.3586				
.040		.2556					
.045			.2677				
.050	.0775			.1677	.1461	.1401	.0823
.080				-.0135			
.085			.1174				
.086		.2820					
.094	.0948						
.150				-.2279	-.2339	-.2273	-.2531
.163		.0000					
.177			-.1208				
.193		.1139					
.229	.1685						
.250				-.4097	-.4204	-.4681	-.5149
.274			-.2243				
.339		-.1938					

ARC11-716 IA14 O1+T12+S12N25+AT11 UPPER WING (RB1U37)

ALPHAO(2) = -4.080 BETAO (2) = -4.020

SECTION (1)UPPER WING DEPENDENT VARIABLE CP

Y/BW	.2990	.3640	.4270	.5340	.6730	.7800	.8870
X/CW							
.362	.1094						
.400				-.2969	-.3320		-.7178
.492			-.3021				
.497	.0000						
.550				-.2376	-.3588		
.565			.0000				
.600							-.4855
.650						-.4622	
.700	-.0044				-.2282		
.725				-.3047			
.750						.0417	-.0111
.760			-.2346				
.775				.0750	.0784		
.808			.0831				
.834	-.1356						
.850				.0688	.1071	.1183	
.857			.0724				
.865	.0544						
.900	.0570			.0565			.0846
.905			.0557		.0488		
.950				.0003		.0604	
.953			.0071				
.965	-.0064						

ALPHAO(2) = -4.080 BETAO (3) = .010

SECTION (1)UPPER WING DEPENDENT VARIABLE CP

Y/BW	.2990	.3640	.4270	.5340	.6730	.7800	.8870
X/CW							
.000	.0286	.1479	.3640	.4044	.2813	.2049	.2413
.020				.3995	.3396	.3451	.3156
.025			.3364				
.040		.2242					
.045			.2652				
.050	.0689			.1943	.1625	.1534	.0961
.080				.0367			
.085			.1360				
.086		.2597					
.094	.0915						
.150				-.1579	-.1708	-.1786	-.2220
.163		.0000					
.177			-.0678				
.193		.1269					

ARC11-716 IA14 C1+T12+S12N25+AT11 UPPER WING (RB1U37)

ALPHAO(2) = -4.080 BETAO (3) = .010

SECTION (1)UPPER WING DEPENDENT VARIABLE CP

Y/BW	.2990	.3640	.4270	.5340	.6730	.7800	.8870
X/CW							
.029	.1633						
.250				-.3738	-.3433	-.4036	-.4756
.274			-.1693				
.339		-.1400					
.362	.1186						
.400				-.3090	-.3405		-.5841
.402			-.2476				
.497	.0000						
.550				-.2954	-.3696		
.565			.0000				
.600							-.5408
.650						-.4893	
.700	-.0448				-.2699		
.725				-.3802			
.750						-.3282	-.2864
.760			-.2813				
.775				-.3368	-.3014		
.808			-.2154				
.834	-.2700						
.850				-.1114	-.0564	-.0431	
.857			-.0727				
.865	-.1820						
.900	-.1079			-.0588			-.0142
.905			-.0309		-.0177		
.950				-.0851		-.0175	
.953			-.0525				
.965	-.0870						

ALPHAO(2) = -4.090 BETAO (4) = 4.070

SECTION (1)UPPER WING DEPENDENT VARIABLE CP

Y/BW	.2990	.3640	.4270	.5340	.6730	.7800	.8870
X/CW							
.000	-.1462	.0974	.2885	.3396	.1897	.1011	.1340
.020				.3719	.3101	.3139	.2800
.025			.2885				
.040		.1616					
.045			.2415				
.050	-.0511			.1893	.1557	.1471	.0886
.080				.0534			
.095			.1316				
.086		.2076					
.094	.0253						

ARC11-716 IA14 O1+T12+S12W25+AT11 UPPER WING (RB1U37)

ALPHAO(2) = -4.090 BETAO (4) = 4.070

SECTION (1)UPPER WING DEPENDENT VARIABLE CP

X/CW \ Y/BW	.2990	.3640	.4270	.5340	.6730	.7800	.8870
.150				-.1173	-.1324	-.1443	-.2111
.163		.0000					
.177			-.0323				
.193		.1213					
.229	.1395						
.250				-.3300	-.2943	-.3438	-.4524
.274			-.1198				
.339		-.0877					
.362	.1082						
.400				-.3274	-.3361		-.5662
.402			-.2085				
.497	.0000						
.550				-.3566	-.3841		
.565			.0000				
.600							-.5670
.650						-.5179	
.700	-.1025				-.2723		
.725				-.4460			
.750						-.4364	-.3711
.760			-.3224				
.775				-.4137	-.3867		
.808			-.2493				
.834	-.2945						
.850				-.3154	-.2568	-.1921	
.857			-.2090				
.865	-.2219						
.900	-.2012			-.2148			-.1072
.905			-.1584		-.0759		
.950				-.1663		-.0822	
.953			-.1291				
.965	-.1699						

ALPHAO(2) = -4.110 BETAO (5) = 8.110

SECTION (1)UPPER WING DEPENDENT VARIABLE CP

X/CW \ Y/BW	.2990	.3640	.4270	.5340	.6730	.7800	.8870
.000	-.3394	.0227	.1327	.3020	.1269	.0109	.0243
.020				.3660	.2980	.2965	.2504
.025			.1921				
.040		.0431					
.045			.1826				
.050	-.1612			.2046	.1807	.1578	.0944

ARC11-716 IA14 D1+T12+S12N25+AT11 UPPER WING (RB1U37)

ALPHAO(2) = -4.110 BETAO (5) = 8.110

SECTION (1)UPPER WING DEPENDENT VARIABLE CP

Y/BW	.2990	.3640	.4270	.5340	.6730	.7800	.8870
X/CW							
.080				.0834			
.085			.1375				
.086		.1161					
.094	-.0750						
.150				-.0678	-.0834	-.0968	-.1747
.163		.0000					
.177			.0131				
.193		.1079					
.229	.0900						
.250				-.2174	-.2265	-.2866	-.4045
.274			-.0734				
.339		-.0455					
.362	.0933						
.400				-.2497	-.3151		-.5279
.402			-.1615				
.497	.0000						
.550				-.3161	-.3757		
.565			.0000				
.600							-.5811
.650						-.5205	
.700	-.1355				-.2593		
.725				-.4048			
.750						-.4605	-.4303
.760			-.3191				
.775				-.3597	-.4019		
.808			-.2645				
.834	-.2919						
.850				-.2875	-.3017	-.2758	
.857			-.2330				
.865	-.2433						
.900	-.2260			-.2201			-.1701
.905			-.1979		-.0904		
.950				-.1624		-.0981	
.953			-.1720				
.965	-.1993						

ARC11-716 IA14 O1+T12+S12N25+A711 UPPER WING (RB1U37)

ALPHAO(3) = -.310 BETAO (1) = -8.040

SECTION (1)UPPER WING DEPENDENT VARIABLE CP

Y/BW	.2990	.3640	.4270	.5340	.6730	.7800	.8870
X/CW							
.000	.0113	.1934	.5134	.6717	.6340	.5943	.5896
.020				.2189	.1729	.1283	.0812
.025			.2370				
.040		.2446					
.045			.1110				
.050	.0092			-.0530	-.1162	-.1555	-.2348
.080				-.2661			
.085			-.0805				
.086		.2318					
.094	.0486						
.150				-.5036	-.5633	-.5314	-.5063
.163		.0000					
.177			-.3208				
.193		-.0164					
.229	.1446						
.250				-.6568	-.7049	-.7434	-.7307
.274			-.4386				
.339		-.3734					
.362	.0320						
.400				-.7785	-.8571		-.9175
.402			-.6119				
.497	.0000						
.550				-.2246	-.6637		
.565			.0000				
.600							-.5754
.650						-.5058	
.700	-.0284				-.2069		
.723				-.0718			
.750						-.3126	-.3860
.760			-.0209				
.775				.0908	.1022		
.808			.1315				
.834	.0015						
.850				.0825	.1228	-.0769	
.857			.1156				
.865	.1549						
.900	.1305			.0658			-.2391
.905			.0920		.0807		
.950				.0033		.0408	
.953			.0305				
.965	.0392						

ARC11-716 IA14 O1+T12+S12N25+AT11 UPPER WING (RB1U37)

ALPHAO(3) = -.320 BETAO (2) = -4.000

SECTION (1)UPPER WING DEPENDENT VARIABLE CP

Y/BW	.2990	.3640	.4270	.5540	.6730	.7800	.8870
X/CW							
.000	-.0259	.1697	.4704	.6063	.5545	.5135	.5196
.020				.2467	.1883	.1482	.0971
.025			.2545				
.040		.2297					
.045			.1432				
.050	.0184			-.0097	-.0757	-.1117	-.2058
.080				-.2029			
.085			-.0313				
.086		.2307					
.094	.0512						
.150				-.4322	-.4758	-.4751	-.4712
.163		.0000					
.177			-.2574				
.193		.0117					
.229	.1401						
.250				-.5508	-.6102	-.6771	-.6937
.274			-.3789				
.339		-.3302					
.362	.0437						
.400				-.6430	-.7783		-.9010
.402			-.5248				
.497	.0000						
.550				-.2383	-.3769		
.565			.0000				
.600							-.8729
.650						-.5446	
.700	-.0532				-.2635		
.725				-.3194			
.750						-.1264	-.3653
.760			-.2816				
.775				-.1651	-.1052		
.808			-.1054				
.834	-.2514						
.850				-.0034	.0421	.0591	
.857			-.0066				
.865	-.1138						
.900	-.0309			.0137			-.0560
.905			.0140		.0217		
.950				-.0273		.0463	
.953			-.0223				
.965	-.0327						

ARC11-716 IA14 O1+T12+S12N25+AT11 UPPER WING (RB1U37)

ALPHAO(3) = -.320 BETAO (3) = .040

SECTION (1)UPPER WING DEPENDENT VARIABLE CP

Y/BW	.2990	.3640	.4270	.5340	.6730	.7800	.8870
X/CW							
.000	-.0715	.1145	.4008	.5198	.4560	.4092	.4289
.020				.2430	.1830	.1563	.1060
.025			.2316				
.040		.1886					
.045			.1333				
.050	.0047			.0089	-.0508	-.0812	-.1703
.080				-.1697			
.085			-.0080				
.086		.2009					
.094	.0398						
.150				-.3621	-.4082	-.4105	-.4348
.163		.0000					
.177			-.2181				
.193		.0222					
.229	.1244						
.250				-.5429	-.5417	-.5981	-.6516
.274			-.3229				
.339		-.2976					
.362	.0473						
.400				-.5415	-.6280		-.8511
.402			-.4208				
.497	.0000						
.550				-.3204	-.4000		
.565			.0000				
.600							-.7967
.650						-.5008	
.700	-.0875				-.2744		
.725				-.3990			
.750						-.3542	-.2918
.760			-.3116				
.775				-.3756	-.3417		
.800			-.2938				
.834	-.2878						
.850				-.3279	-.1779	-.0824	
.857			-.2894				
.865	-.2492						
.900	-.2564			-.1751			-.0441
.905			-.1646		-.0729		
.950				-.1321		-.0464	
.953			-.1022				
.965	-.1499						

DATE 10 JAN 75 TABULATED PRESSURE DATA - IA14A - VOL. 6

ARC11-716 IA14 O1+T12+S12N25+AT11 UPPER WING (RB1U37)

ALPHAO(3) = -.320 BETAO (4) = 4.090

SECTION (1)UPPER WING DEPENDENT VARIABLE CP

Y/BW	.2990	.3640	.4270	.5340	.6730	.7800	.8870
X/CW							
.000	-.1711	.0566	.2715	.4492	.3643	.3120	.3345
.020				.2136	.1503	.1287	.0873
.025			.1595				
.040		.1174					
.045			.0989				
.050	-.0351			.0044	-.0517	-.0817	-.1678
.080				-.1550			
.085			-.0069				
.086		.1416					
.094	.0095						
.150				-.3023	-.3533	-.3748	-.4237
.163		.0000					
.177			-.1825				
.193		.0309					
.229	.0987						
.250				-.5075	-.4862	-.5701	-.6399
.274			-.2577				
.339		-.2179					
.362	.0441						
.400				-.4458	-.4726		-.8040
.402			-.3274				
.497	.0000						
.550				-.3782	-.4333		
.565			.0000				
.600							-.5714
.650						-.5502	
.700	-.1354				-.2844		
.725				-.4595			
.750						-.4374	-.3645
.760			-.3349				
.775				-.4477	-.4111		
.808			-.3470				
.834	-.3183						
.850				-.4318	-.3296	-.2074	
.857			-.3386				
.865	-.3028						
.900	-.3010			-.3338			-.1250
.905			-.2720		-.1476		
.950				-.2135		-.1200	
.953			-.1939				
.965	-.2234						

ARC11-716 IA14 O1+T12+S12N25+AT11 UPPER WING (RB1U37)

ALPHAO(3) = -.330 BETAO (5) = 8.130

SECTION (1)UPPER WING DEPENDENT VARIABLE CP

Y/BW	.2990	.3640	.4270	.5340	.6730	.7800	.8870
X/CW							
.000	-.3695	-.0116	.0931	.2647	.3116	.2315	.2407
.020				.1472	.1595	.1407	.1000
.025			.0572				
.040		.0312					
.045			.0331				
.050	-.1949			.0227	-.0080	-.0398	-.1226
.080				-.0876			
.085			-.0065				
.086		.0153					
.094	-.1201						
.150				-.2144	-.2732	-.3086	-.3687
.163		.0000					
.177			-.1028				
.193		.0294					
.229	.0702						
.250				-.2932	-.3949	-.4733	-.5816
.274			-.1776				
.339		-.1524					
.362	.0252						
.400				-.2868	-.4193		-.6752
.402			-.2434				
.497	.0000						
.550				-.3113	-.4396		
.565			.0000				
.600							-.6105
.650						-.5699	
.700	-.1798				-.2863		
.725				-.3803			
.750						-.4869	-.4206
.760			-.3461				
.775				-.3790	-.4461		
.808			-.3533				
.834	-.3391						
.850				-.3016	-.3594	-.2813	
.857			-.3002				
.865	-.3296						
.900	-.2988			-.2184			-.1668
.905			-.2367		-.1225		
.950				-.1491		-.1331	
.953			-.1817				
.965	-.2148						

ARC11-716 IA14 O1+T12+S12N25+AT11 UPPER WING (RB1U37)

ALPHAO(4) = 4.030 BETAO (1) = -8.060

SECTION (1)UPPER WING DEPENDENT VARIABLE CP

X/CW \ Y/BW	.2490	.3640	.4270	.5340	.6730	.7800	.8870
.000	-.0769	.1124	.4848	.6809	.6462	.5798	.5373
.020				-.0100	-.0643	-.1872	-.2860
.025			.0732				
.040		.1653					
.045			-.0752				
.050	-.1114			-.2815	-.3722	-.4372	-.5633
.080				-.4810			
.085			-.2896				
.086		.1431					
.094	-.0194						
.150				-.7254	-.7781	-.7751	-.7692
.163		.0000					
.177			-.4722				
.193		-.1296					
.229	.1125						
.250				-.8112	-.9349	-.9322	-.7179
.274			-.5850				
.339		-.4869					
.362	-.0270						
.400				-.8749	-.9012		-.6805
.402			-.7524				
.497	.0000						
.550				-.4606	-.6935		
.565			.0000				
.600							-.5875
.650						-.6555	
.700	-.2206				-.2735		
.725				-.1528			
.750						-.5740	-.5138
.760			-.0786				
.775				-.0329	-.4871		
.808			.0686				
.834	-.0270						
.850				.0003	-.3943	-.4855	
.857			.0662				
.865	.1283						
.900	.0964			.0060			-.4748
.905			.0575		-.2311		
.950				-.0294		-.4150	
.953			.0113				
.965	.0136						

ARC11-716 IA14 O1+T12+S12N25+AT11 UPPER WING (RB1U37)

ALPHAO(4) = 4.030 BETAO (2) = -4.010

SECTION (1)UPPER WING DEPENDENT VARIABLE CP

Y/BW	.2990	.3640	.4270	.5340	.6730	.7800	.8870
X/CW							
.000	-.1536	.0681	.4359	.6347	.5870	.5176	.4777
.020				.0162	-.0509	-.1729	-.2849
.025			.0815				
.040		.1484					
.045			-.0486				
.050	-.0636			-.2452	-.3422	-.4210	-.5499
.080				-.4384			
.085			-.2428				
.086		.1420					
.094	-.0090						
.150				-.6540	-.7343	-.7380	-.7602
.163		.0000					
.177			-.4336				
.193		-.1065					
.229	.1035						
.250				-.7426	-.8844	-.9253	-.9090
.274			-.5372				
.339		-.4510					
.362	-.0248						
.400				-.8287	-.9885		-.8778
.402			-.7033				
.497	.0000						
.550				-.4310	-.8140		
.565			.0000				
.600							-.6955
.650						-.6756	
.700	-.1838				-.2617		
.725				-.2499			
.750						-.5575	-.5850
.760			-.2709				
.775				-.1347	-.2335		
.808			-.0818				
.834	-.2420						
.850				-.0726	-.1026	-.4450	
.857			-.0343				
.865	-.1395						
.900	-.0379			-.0370			-.5159
.905			-.0127		-.0296		
.950				-.0633		-.3553	
.953			-.0389				
.965	-.0292						

ARC11-716 IA14 O1+T12+S12N25+AT11 UPPER WING (RB1U37)

ALPHAO(4) = 4.020 BETAO (3) = .030

SECTION (1)UPPER WING DEPENDENT VARIABLE CP

X/CW \ Y/BW	.2990	.3640	.4270	.5340	.6730	.7800	.8870
.000	-.2086	-.0200	.3611	.5666	.5279	.4577	.4243
.020				.0258	-.0381	-.1540	-.2680
.025			.0643				
.040		.1064					
.045			-.0451				
.050	-.0864			-.2157	-.3129	-.3900	-.5204
.080				-.4055			
.085			-.1976				
.086		.1133					
.094	-.0276						
.150				-.5911	-.6901	-.6890	-.7243
.163		.0000					
.177			-.3807				
.193		-.0937					
.229	.0842						
.250				-.6601	-.8000	-.8800	-.8807
.274			-.4752				
.339		-.4119					
.362	-.0210						
.400				-.7435	-.9065		-1.0050
.402			-.6354				
.497	.0000						
.550				-.3143	-.8177		
.565			.0000				
.600							-.8256
.650						-.7663	
.700	-.1772				-.2739		
.725				-.3552			
.750						-.4453	-.6171
.760			-.3248				
.775				-.3382	-.2567		
.808			-.3248				
.834	-.2929						
.850				-.2543	-.1497	-.1399	
.857			-.3165				
.865	-.2872						
.900	-.3006			-.1677			-.5414
.905			-.2141		-.1114		
.950				-.1260		-.0647	
.953			-.1267				
.965	-.1504						

ARC11-716 IA14 O1+T12+S12N25+AT11 UPPER WING (RB1U37)

ALPHAO(4) = 4.020 BETAO (4) = 4.100

SECTION (1)UPPER WING DEPENDENT VARIABLE CP

Y/BW	.2990	.3640	.4270	.5340	.6730	.7600	.8870
X/CW							
.000	-.3130	-.0871	.2021	.4794	.4452	.3868	.3672
.020				.0097	-.0875	-.1693	-.2755
.025			.0046				
.040		.0415					
.045			-.0693				
.050	-.1058			-.2082	-.3166	-.3951	-.5151
.060				-.3720			
.065			-.1808				
.066		.0561					
.094	-.0625						
.150				-.5375	-.6500	-.6684	-.7065
.163		.0000					
.177			-.3338				
.193		-.0749					
.229	.0540						
.250				-.5983	-.7016	-.8197	-.8666
.274			-.4250				
.339		-.3434					
.362	-.0251						
.400				-.5947	-.8282		-1.0190
.402			-.4997				
.437	.0000						
.550				-.3533	-.4917		
.565			.0000				
.600							-.9219
.650						-.5444	
.700	-.1932				-.2888		
.725				-.3884			
.750						-.3611	-.5210
.760			-.3398				
.775				-.3959	-.4115		
.800			-.3823				
.834	-.3341						
.850				-.3621	-.2436	-.1515	
.857			-.3759				
.885	-.3328						
.900	-.3442			-.2475			-.2557
.905			-.2932		-.1425		
.950				-.1467		-.1190	
.953			-.1948				
.965	-.2478						

ARC11-716 IA14 O1+T12+S12N25+AT11 UPPER WING (RB1U37)

ALPHAO(4) = 4.010 BETAO (5) = 8.140

SECTION (1)UPPER WING DEPENDENT VARIABLE CP

X/CW \ Y/BW	.2990	.3640	.4270	.5340	.6730	.7800	.8870
.000	-.4710	-.0432	.0194	.1828	.4013	.3323	.3225
.020				-.0991	-.0373	-.1289	-.2350
.025			-.0455				
.040		-.0037					
.045			-.0728				
.050	-.2656			-.2033	-.2605	-.3347	-.4483
.080				-.2883			
.085			-.1317				
.086		-.0014					
.094	-.2726						
.150				-.3814	-.5118	-.5685	-.6225
.163		.0000					
.177			-.2236				
.193		-.0983					
.229	.0443						
.250				-.3744	-.5768	-.6782	-.7784
.274			-.2797				
.339		-.2535					
.362	-.0242						
.400				-.3233	-.5479		-.9080
.402			-.3131				
.497	.0000						
.550				-.3170	-.3072		
.565			.0000				
.600							-.7267
.650						-.6178	
.700	-.2173				-.3030		
.725				-.3468			
.750						-.4855	-.4427
.760			-.3653				
.775				-.3524	-.4549		
.808			-.3028				
.834	-.3614						
.850				-.2532	-.3118	-.2412	
.857			-.3254				
.865	-.3665						
.900	-.3267			-.1781			-.1869
.905			-.2475		-.1196		
.950				-.1214		-.1299	
.953			-.1887				
.963	-.2114						

ARC11-716 IA14 O1+T12+S12N25+AT11 UPPER WING (RB1U37)

ALPHAO(5) = 7.940 BETAO (1) = -8.030

SECTION (1)UPPER WING DEPENDENT VARIABLE CP

Y/BW	.2990	.3640	.4270	.5340	.6730	.7800	.8870
X/CW							
.000	-.1065	-.0207	.4833	.6435	.5768	.4771	.4069
.020				-.2313	-.3031	-.4608	-.5851
.025			-.0905				
.040		.0650					
.045			-.2587				
.050	-.2196			-.4802	-.6002	-.6836	-.8256
.080				-.6652			
.085			-.4608				
.086		.0491					
.094	-.1086						
.150				-.9247	-.9486	-.8566	-.8496
.163		.0000					
.177			-.6183				
.193		-.2624					
.229	.0817						
.250				-1.0300	-.9871	-.8236	-.8356
.274			-.7089				
.339		-.5755					
.362	-.0794						
.400				-.9131	-.7456		-.7302
.402			-.8408				
.497	.0000						
.550				-.6767	-.7068		
.565			.0000				
.600							-.5959
.650						-.6191	
.700	-.2976				-.2936		
.725				-.5556			
.750						-.5656	-.5638
.760			-.2548				
.775				-.5222	-.6056		
.800			-.1245				
.834	-.1732						
.850				-.3922	-.5436	-.5223	
.857			-.0964				
.869	-.0393						
.900	-.0255			-.2877			-.5413
.905			-.0563		-.4612		
.950				-.2240		-.490[illegible]	
.953			-.0535				
.965	-.0475						

ARC11-716 IA14 O1+T12+S12N25+AT11 UPPER WING (RB1U37)

ALPHAO(5) = 7.940 BETAO (2) = -4.010

SECTION (1)UPPER WING DEPENDENT VARIABLE CP

Y/BW	.2990	.3640	.4270	.5340	.6730	.7800	.8870
X/CW							
.000	-.2465	-.0893	.3938	.5950	.5203	.4237	.3493
.020				-.1813	-.2770	-.4505	-.5952
.025			-.0630				
.040		.0532					
.045			-.2111				
.050	-.1658			-.4316	-.5559	-.6626	-.8252
.080				-.6093			
.085			-.3805				
.086		.0519					
.094	-.0818						
.150				-.8449	-.9069	-.9405	-.9198
.163		.0000					
177			-.5503				
.193		-.2150					
.229	.0696						
.250				-.9808	-1.0430	-.8827	-.8963
.274			-.6414				
.339		-.5242					
.362	-.0703						
.400				-1.0270	-.9159		-.8867
.402			-.7846				
.497	.0000						
.550				-.5501	-.7660		
.565			.0000				
.600							-.6406
.650						-.6780	
.700	-.3772				-.2801		
.725				-.4661			
.750						-.5826	-.6322
.760			-.2935				
.775				-.4022	-.5988		
.808			-.1726				
.834	-.2093						
.850				-.3057	-.5213	-.5078	
.857			-.1586				
.865	-.1489						
.900	-.1299			-.2322			-.6330
.905			-.1029		-.4100		
.950				-.1934		-.4770	
.953			-.0841				
.965	-.0718						

ARC11-716 IA14 O1+T12+S12N25+AT11 UPPER WING (RB1U37)

ALPHAO(3) = 7.940 BETAO (3) = .040

SECTION (1)UPPER WING DEPENDENT VARIABLE CP

X/CW \ Y/BW	.2990	.3640	.4270	.5340	.6730	.7800	.8870
.000	-.3078	-.1670	.3149	.5710	.4785	.3644	.2864
.020				-.1353	-.2510	-.4445	-.6073
.025			-.0571				
.040		.0369					
.045			-.1783				
.050	-.1530			-.3816	-.5261	-.6454	-.8290
.080				-.5598			
.085			-.3513				
.086		.0474					
.094	-.0759						
.150				-.7581	-.8703	-.9133	-.9611
.163		.0000					
.177			-.4795				
.193		-.1706					
.229	.0530						
.250				-.9513	-.9994	-.9378	-.9322
.274			-.5832				
.339		-.4779					
.362	-.0676						
.400				-1.0090	-.9942		-.9388
.402			-.7348				
.497	.0000						
.550				-.5247	-.7921		
.565			.0000				
.600							-.6931
.650						-.7036	
.700	-.3279				-.2787		
.725				-.4216			
.750						-.5790	-.6724
.760			-.3037				
.775				-.3760	-.5303		
.800			-.2586				
.834	-.2607						
.850				-.3498	-.4135	-.4973	
.857			-.2510				
.865	-.2422						
.900	-.2205			-.2999			-.6778
.905			-.1828		-.2775		
.950				-.2559		-.4656	
.953			-.1304				
.969	-.1237						

ARC11-716 IA14 O1+T12+S12N25+AT11 UPPER WING (RB1U37)

ALPHAO(5) = 7.930 BETAO (4) = 4.110

SECTION (1)UPPER WING DEPENDENT VARIABLE CP

Y/BW	.2990	.3640	.4270	.5340	.6730	.7800	.8870
X/CW							
.000	-.4454	-.1670	.1106	.4663	.4584	.3330	.2376
.020				-.1461	-.2291	-.4185	-.6072
.025			-.1264				
.040		-.0254					
.045			-.1950				
.050	-.1007			-.3648	-.5097	-.6201	-.8181
.080				-.5228			
.085			-.2586				
.086		-.0118					
.094	-.1383						
.150				-.6855	-.8422	-.8859	-.9480
.163		.0000					
.177			-.4313				
.193		-.1440					
.229	-.0185						
.250				-.8347	-.9510	-1.0200	-.9692
.274			-.5138				
.339		-.4091					
.362	-.0868						
.400				-.9022	-.9796		-.9740
.402			-.6395				
.497	.0000						
.550				-.5316	-.7041		
.565			.0000				
.600							-.7394
.650						-.6722	
.700	-.2693				-.2741		
.725				-.4377			
.750						-.5451	-.6923
.760			-.3349				
.775				-.4189	-.3425		
.808			-.3511				
.834	-.3453						
.850				-.3677	-.2859	-.4902	
.857			-.3155				
.865	-.3574						
.900	-.3231			-.2943			-.3734
.905			-.2402		-.2278		
.950				-.2318		-.4582	
.953			-.1738				
.965	-.1947						

ARC11-716 TA14 O1+T12+S12N25+AT11 UPPER WING (RB1U37)

ALPHAO(5) = 7.920 BETAO (5) = 8.180

SECTION (1)UPPER WING DEPENDENT VARIABLE CP

Y/BW	.2990	.3640	.4270	.5340	.6730	.7800	.8870
X/CW							
.000	-.4233	-.0894	-.0729	.1634	.4223	.3256	.2233
.020				-.2896	-.2173	-.3787	-.5641
.025			-.1483				
.040		-.0513					
.045			-.1728				
.050	-.3092			-.3929	-.4792	-.5807	-.7752
.080				-.4792			
.085			-.2119				
.086		-.0507					
.094	-.3287						
.150				-.5366	-.7642	-.8264	-.9028
.163		.0000					
.177			-.3115				
.193		-.1658					
.229	-.0863						
.250				-.4834	-.7922	-.9557	-1.0100
.274			-.3694				
.339		-.3562					
.362	-.0773						
.400				-.3905	-.7752		-1.0040
.402			-.3930				
.497	.0000						
.550				-.3431	-.5804		
.565			.0000				
.600							-.7639
.650						-.5395	
.700	-.2626				-.2996		
.725				-.3151			
.750						-.3179	-.7149
.760			-.3660				
.775				-.3059	-.3152		
.808			-.3717				
.834	-.3558						
.850				-.1762	-.1903	-.2479	
.857			-.2857				
.865	-.3560						
.900	-.3009			-.1179			-.5873
.905			-.2172		-.1557		
.950				-.0924		-.2219	
.953			-.1769				
.965	-.2170						

ARC11-716 IA14 O1+T12+S12N25+AT11 UPPER WING (RB1U38) (15 FEB 74)

REFERENCE DATA

SREF = 2.4210 SQ.FT. XMRP = 29.5800 INCHES
LREF = 38.7090 INCHES YMRP = .0000 INCHES
BREF = 38.7090 INCHES ZMRP = .0000 INCHES
SCALE = .0300 SCALE

PARAMETRIC DATA

MACH = 1.050 ELEVON = .000
RUDDER = .000 SPOBRK = .000

ALPHAO(1) = -8.080 BETAO (1) = -8.020

SECTION (1)UPPER WING DEPENDENT VARIABLE CP

Y/BW	.2990	.3640	.4270	.5340	.6730	.7800	.8870
X/CW							
.000	-.1690	-.0654	.4227	.5231	.4312	.3512	.3683
.020				.5617	.5416	.5657	.5597
.025			.4618				
.040		.2337					
.045			.3888				
.050	-.0538			.3435	.3524	.3715	.3568
.080				.1657			
.085			.2447				
.086		.3125					
.094	-.0385						
.150				-.0543	-.0025	.0236	.0220
.163		.0000					
.177			.0143				
.193		.1912					
.229	.0265						
.250				-.2818	-.1952	-.2226	-.2476
.274			-.0938				
.339		-.0954					
.362	.1568						
.400				-.1097	-.1002		-.4563
.402			-.1163				
.497	.0000						
.550				-.0582	-.1293		
.565			.0000				
.600							-.3021
.650						-.2423	
.700	.1904				-.1461		
.725				-.0264			
.750						.2866	.2128
.760			.0800				
.775				.2601	.2990		
.808			.2780				
.834	.1253						
.850				.2208	.2860	.2986	
.857			.2579				
.865	.2787						
.900	.2529			.2057			.2625
.905			.2358		.2235		

ARC11-716 IA14 O1 T12+S12N25+AT11 UPPER WING (RB1U38)

ALPHAO(1) = -8.080 BETAO (1) = -8.020

SECTION (1)UPPER WING DEPENDENT VARIABLE CP

Y/BW	.2990	.3640	.4270	.5340	.6730	.7800	.8870
x/CW							
.950				.1461		.2358	
.953			.1801				
.965	.1664						

ALPHAO(1) = -8.070 BETAO (2) = -4.980

SECTION (1)UPPER WING DEPENDENT VARIABLE CP

Y/BW	.2990	.3640	.4270	.5340	.6730	.7800	.8870
x/CW							
.000	-.2113	-.1073	.3811	.4618	.3476	.2523	.2662
.020				.5722	.5340	.5483	.5339
.025			.4587				
.040		.1697					
.045			.4067				
.050	-.0981			.3746	.3732	.3812	.3576
.080				.2206			
.085			.2755				
.086		.2925					
.094	-.0786						
.150				.0194	.0402	.0669	.0490
.163		.0000					
.177			.0727				
.193		.2243					
.229	-.0189						
.250				-.1640	-.1391	-.1619	-.2096
.274			-.0187				
.339		-.0129					
.362	.1744						
.400				-.0553	-.1226		-.3323
.402			-.0677				
.497	.0000						
.550				-.0355	-.1404		
.565			.0000				
.600							-.3253
.650						-.2564	
.700	.1659				-.1769		
.725				-.1133			
.750						.0398	.0453
.760			-.0729				
.775				.1817	.1359		
.808			.2117				
.834	.0002						
.850				.1933	.2231	.2187	

ARC11-716 IA14 D1+T12+S12N25+AT11 UPPER WING (RB1U38)

ALPHAO(1) = -8.070 BETAO (2) = -4.980

SECTION (1)UPPER WING DEPENDENT VARIABLE CP

X/CW \ Y/BW	.2990	.3640	.4270	.5340	.6730	.7800	.8870
.857			.2002				
.865	.1975						
.900	.1890			.1962			.2240
.905			.1942		.1875		
.950				.1511		.1991	
.953			.1522				
.965	.1296						

ALPHAO(1) = -8.060 BETAO (3) = .030

SECTION (1)UPPER WING DEPENDENT VARIABLE CP

X/CW \ Y/BW	.2990	.3640	.4270	.5340	.6730	.7800	.8870
.000	-.2598	-.0171	.3196	.3552	.2049	.0915	.0996
.020				.5542	.4970	.5091	.4791
.025			.4271				
.040		.1530					
.045			.3900				
.050	-.1645			.3955	.3912	.3864	.3539
.080				.2670			
.085			.3076				
.086		.2643					
.094	-.1229						
.150				.0931	.1084	.1260	.0820
.163		.0000					
.177			.1394				
.193		.2479					
.229	.0061						
.250				-.0445	-.0429	-.0656	-.1556
.274			.0502				
.339		.0596					
.362	.1993						
.400				-.0172	-.1075		-.2894
.402			-.0226				
.497	.0000						
.550				-.0366	-.1440		
.565			.0000				
.600							-.3368
.650						-.2681	
.700	.1181				-.2151		
.725				-.1271			
.750						-.2099	-.2088
.760			-.1047				

ARC11-716 IA14 O1+T12+S12N25+AT11 UPPER WING (RB1U38)

ALPHAO(1) = -8.060 BETAO (3) = .030

SECTION (1)UPPER WING DEPENDENT VARIABLE CP

X/CW \ Y/BW	.2990	.3640	.4270	.5340	.6730	.7800	.8870
.775				-.0934	-.1479		
.808			-.0625				
.834	-.1914						
.850				.0151	-.0552	-.0230	
.857			.0306				
.865	-.0095						
.900	.0314			.0974			.0612
.905			.0795		.1110		
.950				.0953		.1027	
.953			.0722				
.965	.0384						

ALPHAO(1) = -8.070 BETAO (4) = 4.120

SECTION (1)UPPER WING DEPENDENT VARIABLE CP

X/CW \ Y/BW	.2990	.3640	.4270	.5340	.6730	.7800	.8870
.000	-.2878	.0049	.2218	.2653	.0822	-.0339	-.0304
.020				.5199	.4505	.4601	.4188
.025			.3798				
.040		.1004					
.045			.3660				
.050	-.1641			.3944	.3832	.3680	.3355
.080				.2871			
.085			.3076				
.086		.2040					
.094	-.1193						
.150				.1299	.1366	.1460	.0933
.163		.0000					
.177			.1719				
.193		.2404					
.229	.0273						
.250				.0013	-.0007	-.0260	-.1255
.274			.0858				
.339		.0889					
.362	.1944						
.400				-.0142	-.0884		-.2676
.402			-.0094				
.497	.0000						
.550				-.0545	-.1445		
.555			.0000				
.600							-.3461
.650						-.2730	

ARC11-716 IA14 O1+T12+S12N25+AT11 UPPER WING (RB1U38)

ALPHAO(1) = -8.070 BETAO (4) = 4.120

SECTION (1)UPPER WING DEPENDENT VARIABLE CP

Y/BW	.2990	.3640	.4270	.5340	.6730	.7800	.8870
X/CW							
.700	.0768				-.2202		
.725				-.1552			
.750						-.2307	-.2476
.760			-.1396				
.775				-.1360	-.1830		
.808			-.1391				
.834	-.1401						
.850				-.1254	-.1605	-.1523	
.857			-.0855				
.865	-.1058						
.900	-.0508			-.0174			-.0304
.905			-.0016		.0180		
.950				.0137		-.0137	
.953			-.0016				
.955	-.0311						

ALPHAO(1) = -8.100 BETAO (5) = 8.160

SECTION (1)UPPER WING DEPENDENT VARIABLE CP

Y/BW	.2990	.3640	.4270	.5340	.6730	.7800	.8870
X/CW							
.000	-.3232	-.0454	.0771	.1773	-.0024	-.1253	-.1293
.020				.5035	.4343	.4321	.3784
.025			.2982				
.040		.0212					
.045			.3204				
.050	-.1833			.4134	.4006	.3730	.3352
.080				.3277			
.085			.3144				
.086		.1351					
.094	-.1382						
.150				.1826	.1858	.1853	.1204
.163		.0000					
.177			.2129				
.193		.2352					
.229	.0003						
.250				.0661	.0491	.0198	-.0832
.274			.1283				
.339		.1119					
.362	.1727						
.400				.0118	-.0602		-.2364
.402			.0247				
.497	.0000						

ARC11-716 IA14 O1+T12+S12N25+AT11 UPPER WING (RB1U38)

ALPHAO(1) = -8.100 BETAO (5) = 8.160

SECTION (1)UPPER WING DEPENDENT VARIABLE CP

Y/BW	.2990	.3640	.4270	.5340	.6730	.7800	.8870
X/CW							
.550				-.0571	-.1357		
.565			.0000				
.600							-.3411
.650						-.2653	
.700	.0464				-.2077		
.725				-.1679			
.750						-.2288	-.2781
.760			-.1418				
.775				-.1535	-.1928		
.808			-.1625				
.834	-.1574						
.850				-.1525	-.1750	-.1783	
.857			-.1631				
.865	-.1437						
.900	-.1266			-.0778			-.0714
.905			-.0214		-.0407		
.950				-.0003		-.0551	
.953			-.0212				
.965	-.0602						

ALPHAO(2) = -4.080 BETAO (1) = -8.040

SECTION (1)UPPER WING DEPENDENT VARIABLE CP

Y/BW	.2990	.3640	.4270	.5340	.6730	.7800	.8870
X/CW							
.000	-.1189	.1155	.5082	.6361	.5721	.5289	.5616
.020				.4189	.4030	.4222	.4173
.025			.3611				
.040		.2346					
.045			.2572				
.050	-.1580			.1676	.1568	.1769	.1413
.080				-.0205			
.085			.0796				
.086		.2641					
.094	-.0792						
.150				-.2588	-.2436	-.2020	-.1773
.165		.0000					
.177			-.1408				
.193		.0793					
.229	.0241						
.250				-.4163	-.4098	-.4272	-.4223
.274			-.2517				
.339		-.2104					

ARC11-716 IA14 O1+T12+S12N25+AT11 UPPER WING (RB1U38)

ALPHAO(2) = -4.080 BETAO (1) = -8.040

SECTION (1)UPPER WING DEPENDENT VARIABLE CP

Y/BW	.2990	.3640	.4270	.5340	.6730	.7800	.8870
X/CW							
.362	.0831						
.400				-.5418	-.5839		-.6318
.402			-.4156				
.497	.0000						
.550				-.0531	-.2342		
.565			.0000				
.600							-.5916
.650						-.3396	
.700	.1262				-.1631		
.725				-.0468			
.750						.0769	-.1300
.760			.0375				
.775				.2137	.2390		
.808			.2475				
.834	.0758						
.850				.2168	.2507	.2768	
.857			.2346				
.865	.2401						
.900	.2307			.2025			.0723
.905			.2154		.1978		
.950				.1462		.2314	
.953			.1609				
.965	.1557						

ALPHAO(2) = -4.090 BETAO (2) = -4.020

SECTION (1)UPPER WING DEPENDENT VARIABLE CP

Y/BW	.2990	.3640	.4270	.5340	.6730	.7800	.8870
X/CW							
.000	-.2044	.0197	.4570	.5600	.4701	.4115	.4586
.020				.4338	.3994	.4211	.4217
.025			.3645				
.040		.1917					
.045			.2814				
.050	-.2015			.2052	.1857	.2036	.1772
.080				.0308			
.085			.1350				
.086		.2476					
.094	-.1440						
.150				-.1805	-.1722	-.1321	-.1335
.165		.0000					
.177			-.0661				
.195		.1206					

ARC11-716 IA14 O1+T12+S12N25+AT11 UPPER WING (RB1U38)

ALPHAO(2) = -4.090 BETAO (2) = -4.020

SECTION (1)UPPER WING DEPENDENT VARIABLE CP

Y/BW	.2990	.3640	.4270	.5340	.6730	.7800	.8870
X/CW							
.229	-.0346						
.250				-.3299	-.3133	-.3414	-.3702
.274			-.1781				
.339		-.1551					
.362	.1126						
.400				-.3406	-.4676		-.5863
.402			-.2943				
.497	.0000						
.550				-.0677	-.1685		
.565			.0000				
.600							-.5317
.650						-.2835	
.700	.1141				-.2099		
.725				-.1538			
.750						-.1137	-.0411
.760			-.1034				
.775				-.0909	-.0798		
.800			.0061				
.834	-.0935						
.850				.1072	.1388	.1626	
.857			.1137				
.865	.0402						
.900	.0836			.1442			.1601
.905			.1426		.1442		
.950				.1080		.1603	
.953			.1119				
.965	.0838						

ALPHAO(2) = -4.090 BETAO (3) = .040

SECTION (1)UPPER WING DEPENDENT VARIABLE CP

Y/BW	.2990	.3640	.4270	.5340	.6730	.7800	.8870
X/CW							
.000	-.2479	.0255	.3964	.4704	.3633	.2833	.3384
.020				.4257	.3837	.4009	.4112
.025			.3408				
.040		.1631					
.045			.2765				
.050	-.2261			.2246	.2095	.2163	.2042
.080				.0711			
.085			.1636				
.088		.2271					
.094	-.1649						

ARC11-716 IA14 O1+T12+S12N25+AT11 UPPER WING (RB1U38)

ALPHAO(2) = -4.090 BETAO (3) = .040

SECTION (1)UPPER WING DEPENDENT VARIABLE CP

X/CW \ Y/BW	.2990	.3640	.4270	.5340	.6730	.7800	.8870
.150				-.1001	-.0916	-.0777	-.0934
.163		.0000					
.177			-.0194				
.193		.1409					
.209	.0157						
.250				-.2140	-.2485	-.2772	-.3306
.274			-.1001				
.339		-.0986					
.362	.1297						
.400				-.1605	-.2179		-.5003
.402			-.1714				
.497	.0000						
.550				-.0680	-.1878		
.565			.0000				
.600							-.3543
.650						-.3169	
.700	.0789				-.2192		
.725				-.1521			
.750						-.2309	-.1788
.760			-.1310				
.775				-.1286	-.1836		
.808			-.1090				
.834	-.1330						
.850				-.1157	-.1141	-.0203	
.857			-.0979				
.865	-.0546						
.900	-.0617			-.0363			.0548
.905			-.0332		.0522		
.950				.0375		.0580	
.953			.0019				
.965	-.0473						

ALPHAO(2) = -4.090 BETAO (4) = 4.080

SECTION (1)UPPER WING DEPENDENT VARIABLE CP

X/CW \ Y/BW	.2990	.3640	.4270	.5340	.6730	.7800	.8870
.000	-.3650	.0044	.2805	.3959	.2683	.1797	.2228
.020				.3995	.3509	.3682	.3686
.025			.2802				
.040		.0932					
.045			.2418				
.050	-.1824			.2284	.2153	.2123	.1979

ARC11-716 IA14 O1+T12+S12N25+AT11 UPPER WING (R21US8)

ALPHAO(2) = -4.090 BETAO (4) = 4.080

SECTION (1)UPPER WING DEPENDENT VARIABLE CP

X/CW \ Y/BW	.2990	.3640	.4270	.5340	.6730	.7800	.8870
.080				.0951			
.085			.1560				
.086		.1556					
.094	-.1237						
.150				-.0516	-.0570	-.0484	-.0752
.163		.0000					
.177			.0136				
.193		.1373					
.229	.0285						
.250				-.1606	-.1879	-.2174	-.2931
.274			-.0478				
.339		-.0414					
.362	.1114						
.400				-.1225	-.1766		-.3800
.402			-.1147				
.497	.0000						
.550				-.0941	-.2021		
.565			.0000				
.600							-.3873
.650						-.3282	
.700	.0428				-.2265		
.725				-.1824			
.750						-.2661	-.2388
.760			-.1636				
.775				-.1698	-.2208		
.808			-.1633				
.834	-.1681						
.850				-.1732	-.1984	-.1344	
.857			-.1600				
.865	-.1229						
.900	-.1193			-.1488			-.0112
.905			-.1102		-.0877		
.950				-.0704		-.0144	
.953			-.0915				
.965	-.1132						

ARC11-716 IA14 OI+T12+S12N25+AT11 UPPER WING (RB1U38)

ALPHAO(2) = -4.100 BETAO (5) = 8.120

SECTION (1)UPPER WING DEPENDENT VARIABLE CP

Y/BW	.2990	.3640	.4270	.5340	.6730	.7800	.8870
X/CW							
.000	-.5144	-.0451	.1117	.2850	.2086	.1110	.1279
.020				.3839	.3651	.3775	.3520
.025			.1607				
.040		-.0246					
.045			.1850				
.050	-.2241			.2615	.2591	.2508	.2135
.080				.1679			
.085			.1808				
.086		.0735					
.094	-.1333						
.150				.0400	.0275	.0275	-.0288
.163		.0000					
.177			.0879				
.193		.1310					
.229	.0107						
.250				-.0672	-.0992	-.1359	-.2330
.274			.0191				
.339		.0159					
.362	.1004						
.400				-.0761	-.1545		-.3448
.402			-.0527				
.497	.0000						
.550				-.1026	-.1959		
.565			.0000				
.600							-.3975
.650						-.3245	
.700	.0224				-.2245		
.725				-.2064			
.750						-.2771	-.2765
.760			-.1789				
.775				-.1891	-.2373		
.808			-.1815				
.834	-.1786						
850				-.1930	-.2208	-.2046	
357			-.1872				
.865	-.1587						
.900	-.1576			-.1618			-.0661
.905			-.1310		-.1369		
.950				-.1128		-.0650	
.953			-.0966				
.965	-.1220						

ARC11-716 IA14 O1+T12+S12N25+AT11 UPPER WING (RC1U38)

ALPHAO(3) = -.310 BETAO (1) = -8.040

SECTION (1)UPPER WING DEPENDENT VARIABLE CP

Y/BW	.2990	.3640	.4270	.5340	.6730	.7800	.8870
X/CW							
.000	-.0417	.0798	.5369	.7241	.6955	.6625	.6691
.020				.2646	.2596	.2206	.1906
.025			.2455				
.040		.1971					
.045			.1242				
.050	-.1575			.0116	-.0277	-.0415	-.1020
.080				-.1879			
.085			-.0792				
.086		.2084					
.094	-.1494						
.150				-.4012	-.4231	-.3824	-.3592
.163		.0000					
.177			-.2398				
.193		-.0132					
.229	-.0227						
.250				-.5455	-.5692	-.5947	-.5616
.274			-.3494				
.339		-.2819					
.362	.0384						
.400				-.6311	-.7230		-.7639
.402			-.5113				
.497	.0000						
.550				-.3567	-.7107		
.565			.0000				
.600							-.7067
.650						-.6200	
.700	-.0392				-.2208		
.725				-.1397			
.750						-.4092	-.4698
.760			-.1050				
.775				.0349	.0887		
.808			.1402				
.834	-.0507						
.850				.1213	.1669	-.3201	
.857			.1721				
.865	.1371						
.900	.1728			.1402			-.2812
.905			.1766		.1721		
.950				.1016		-.2076	
.953			.1358				
.965	.1371						

ARC11-716 IA14 O1+T12+S12N25+AT11 UPPER WING (R81U38)

ALPHAO(3) = -.320 BETAO (2) = -4.010

SECTION (1)UPPER WING DEPENDENT VARIABLE CP

Y/BW	.2990	.3640	.4270	.5340	.6730	.7800	.8870
X/CW							
.000	-.1345	.0212	.4920	.6576	.6140	.5805	.5973
.020				.2938	.2630	.2328	.1949
.023			.2657				
.040		.1775					
.045			.1640				
.050	-.2433			.0533	.0103	-.0207	-.0837
.080				-.1334			
.085			.0069				
.086		.2107					
.094	-.1892						
.150				-.3437	-.3769	-.3517	-.3421
.163		.0000					
.177			-.1878				
.193		.0453					
.229	-.0357						
.250				-.5175	-.5095	-.5403	-.5378
.274			-.2938				
.339		-.2388					
.362	.0763						
.400				-.6349	-.6479		-.7345
.402			-.4308				
.497	.0000						
.550				-.1878	-.5578		
.565			.0000				
.600							-.7171
.650						-.6290	
.700	.0416				-.2126		
.725				-.2110			
.750						-.2201	-.3815
.760			-.1321				
.775				-.1507	-.0577		
.808			-.0657				
.834	-.1097						
.850				-.0432	.0609	.1234	
.857			-.0190				
.865	-.0205						
.900	-.0218			.0513			-.1652
.905			.0863		.1670		
.950				.0431		.1443	
.953			.0782				
.965	.0546						

ARC11-716 IA14 O1+T12+S12N25+AT11 UPPER WING (RB1U38)

ALPHAO(3) = -.330 BETAO (3) = .040

SECTION (1)UPPER WING DEPENDENT VARIABLE CP

Y/BW	.2990	.3640	.4270	.5340	.6730	.7800	.8870
X/CW							
.000	-.2534	.0131	.4239	.5671	.5102	.4783	.5132
.020				.2840	.2457	.2313	.2040
.025			.2430				
.040		.1490					
.045			.1572				
.050	-.2850			.0653	.0247	.0022	-.0561
.080				-.0946			
.085			.0301				
.086		.1910					
.094	-.2026						
.150				-.2883	-.3191	-.3050	-.3072
.163		.0000					
.177			-.1450				
.193		.0563					
.229	.0461						
.250				-.4355	-.4306	-.4828	-.5043
.274			-.2439				
.339		-.2049					
.362	.0849						
.400				-.5118	-.5680		-.6785
.492			-.3736				
.497	.0000						
.550				-.1574	-.2022		
.565			.0000				
.600							-.6483
.650						-.2693	
.700	.0307				-.2263		
.725				-.2273			
.750						-.1562	-.2514
.760			-.1518				
.775				-.2069	-.1849		
.808			-.1321				
.834	-.1533						
.850				-.1962	-.0850	.0254	
.857			-.1402				
.865	-.0849						
.900	-.1035			-.1314			.0318
.905			-.0897		.0231		
.950				-.0444		.0792	
.953			-.0462				
.965	-.1027						

ARC11-715 IA14 01+T12+S12N25+AT11 UPPER WING (RB1U38)

ALPHAO(3) = -.320 BETAO (4) = 4.090

SECTION (1)UPPER WING DEPENDENT VARIABLE CP

Y/BW	.2990	.3640	.4270	.5340	.6730	.7800	.8870
X/CW							
.000	-.4030	-.0502	.2761	.4907	.4136	.3811	.4243
.020				.2517	.2129	.2065	.1957
.025			.1632				
.040		.0612					
.045			.1067				
.050	-.2618			.0572	.0194	.0092	-.0381
.080				-.0863			
.085			.0201				
.086		.1125					
.094	-.1459						
.150				-.2483	-.2647	-.2630	-.2703
.163		.0000					
.177			-.1180				
.193		.0543					
.229	.0367						
.250				-.3935	-.3669	-.4139	-.4634
.274			-.2027				
.339		-.1572					
.362	.0639						
.400				-.3106	-.3464		-.6339
.402			-.2204				
.497	.0000						
.550				-.1963	-.2484		
.565			.0000				
.600							-.4238
.650						-.3607	
.700	-.0051				-.2369		
.725				-.2671			
.750						-.2688	-.1868
.760			-.2022				
.775				-.2550	-.2427		
.808			-.1846				
.834	-.1920						
.850				-.2634	-.1988	-.0754	
.857			-.1973				
.865	-.1475						
.900	-.1609			-.2463			.0128
.905			-.1717		-.0614		
.950				-.1763		.0082	
.953			-.1458				
.965	-.1688						

ARC11-716 IA14 O1+T12+S12N25+AT11 UPPER WING (RB1U38)

ALPHAO(3) = -.330 BETAO (5) = 8.130

SECTION (1)UPPER WING DEPENDENT VARIABLE CP

Y/BW	.2990	.3640	.4270	.5340	.6730	.7800	.8870
X/CW							
.000	-.6072	-.0630	.0917	.2575	.3811	.3125	.3385
.020				.1620	.2359	.2320	.2166
.025			.0650				
.040		-.0064					
.045			.0508				
.050	-.3236			.0598	.0737	.0591	.0126
.080				-.0105			
.085			.0176				
.086		-.0250					
.094	-.1937						
.150				-.1170	-.1625	-.1719	-.2118
.163		.0000					
.177			-.0486				
.193		.0775					
.229	.0394						
.250				-.2326	-.2568	-.3220	-.4081
.274			-.0945				
.339		-.0920					
.362	.0522						
.400				-.2071	-.2625		-.4994
.402			-.1358				
.497	.0000						
.550				-.2029	-.2599		
.565			.0000				
.600							-.4245
.650						-.3772	
.700	-.0284				-.2442		
.725				-.2924			
.750						-.3002	-.2551
.760			-.2017				
.775				-.2724	-.2667		
.800			-.2091				
.834	-.2190						
.850				-.2751	-.2360	-.1619	
.857			-.2141				
.865	-.1868						
.900	-.1974			-.2437			-.0317
.905			-.1774		-.1098		
.950				-.2012		-.0447	
.953			-.1504				
.965	-.1805						

ARC11-716 IA14 O1+T12+S12N25+AT11 UPPER WING (RB1U38)

ALPHAO(4) = 4.020 BETAO (1) = -8.050

SECTION (1)UPPER WING DEPENDENT VARIABLE CP

Y/BW	.2990	.3640	.4270	.5340	.6730	.7800	.8870
X/CW							
.000	-.0276	-.0484	.5080	.7230	.7032	.6493	.6150
.020				.0501	.0297	-.0760	-.1571
.025			.0979				
.040		.1153					
.045			-.0563				
.050	-.1341			-.1941	-.2583	-.3054	-.4113
.080				-.3754			
.085			-.2421				
.086		.1229					
.094	-.1708						
.150				-.6125	-.6200	-.6104	-.6020
.163		.0000					
.177			-.3735				
.193		-.1201					
.229	-.0517						
.250				-.7282	-.7647	-.7687	-.7387
.274			-.4758				
.339		-.3706					
.362	.0149						
.400				-.7878	-.8251		-.7917
.402			-.6059				
.497	.0000						
.550				-.7719	-.7812		
.565			.0000				
.600							-.6970
.650						-.6431	
.700	-.3854				-.2777		
.725				-.2516			
.750						-.5472	-.5832
.760			-.1745				
.775				-.1155	-.5699		
.808			-.0171				
.834	-.0725						
.850				-.0337	-.4541	-.4545	
.857			.0530				
.865	.0460						
.900	.069			-.0032			-.5603
.905			.1107		-.2707		
.950				-.0209		-.4337	
.953			.1060				
.965	.1073						

ARC11-716 IA14 O1+T12+S12N25+AT11 UPPER WING (RB1U38)

ALPHAO(4) = 4.020 BETAO (2) = -4.020

SECTION (1)UPPER WING DEPENDENT VARIABLE CP

X/CW \ Y/BW	.2990	.3640	.4270	.5340	.6730	.7800	.8870
.000	-.1377	-.0983	.4712	.6922	.6543	.5933	.5603
.020				.0866	.0547	-.0527	-.1566
.025			.1187				
.040		.1244					
.045			-.0089				
.050	-.2299			-.1581	-.2262	-.2786	-.3984
.080				-.3333			
.085			-.1617				
.086		.1485					
.094	-.2507						
.150				-.5328	-.5792	-.5789	-.5898
.163		.0000					
.177			-.3209				
.193		-.0582					
.229	.0221						
.250				-.7033	-.7234	-.7412	-.7298
.274			-.4092				
.339		-.3309					
.362	.0461						
.400				-.7707	-.8299		-.8551
.402			-.5663				
.497	.0000						
.550				-.6871	-.8097		
.565			.0000				
.600							-.7645
.650						-.7368	
.700	-.2004				-.2667		
.725				-.2622			
.750						-.5699	-.5867
.760			-.2012				
.775				-.1800	-.2268		
.808			-.0887				
.834	-.1234						
.850				-.1464	-.0384	-.5032	
.857			-.0965				
.865	-.0787						
.900	-.0879			-.1090			-.5551
.905			-.0663		.0240		
.950				-.1061		-.4681	
.953			-.0240				
.965	-.0590						

ARC11-716 IA14 O1+T12+S12N25+AT11 UPPER WING (RB1U59)

ALPHAO(4) = 4.020 BETAO (3) = .030

SECTION (1)UPPER WING DEPENDENT VARIABLE CP

Y/BW	.2990	.3640	.4270	.5340	.6730	.7800	.8870
X/CW							
.000	-.2734	-.1181	.3858	.6123	.5857	.5288	.5092
.020				.0837	.0575	-.0416	-.1439
.025			.0936				
.040		.0923					
.045			-.0048				
.050	-.3317			-.1387	-.2023	-.2617	-.3748
.080				-.2927			
.085			-.1490				
.086		.1241					
.094	-.3019						
.150				-.4686	-.5436	-.5381	-.5692
.163		.0000					
.177			-.2759				
.193		-.0400					
.229	.0798						
.250				-.5804	-.6590	-.7063	-.7064
.274			-.3679				
.339		-.2937					
.362	.0420						
.400				-.6656	-.7500		-.8533
.402			-.5190				
.497	.0000						
.550				-.3145	-.7405		
.565			.0000				
.600							-.8014
.650						-.8000	
.700	-.1228				-.2385		
.725				-.2750			
.750						-.5846	-.5752
.760			-.2187				
.775				-.2312	-.1522		
.808			-.1579				
.834	-.1517						
.850				-.1879	-.0764	-.2233	
.857			-.1811				
.865	-.1318						
.900	-.1496			-.1446			-.4304
.905			-.1574		-.0103		
.950				-.1070		.0478	
.953			-.1219				
.965	-.1784						

ARC11-716 IA14 O1+T12+S12N25+AT11 UPPER WING (RB1U38)

ALPHAO(4) = 4.010 BETAO (4) = 4.110

SECTION (1)UPPER WING DEPENDENT VARIABLE CP

Y/BW	.2990	.3640	.4270	.5340	.6730	.7800	.8870
X/CW							
.000	-.4533	-.1451	.1857	.4931	.5026	.4551	.4505
.020				.0666	.0306	-.0590	-.1475
.025			.0139				
.040		-.0051					
.045			-.0453				
.050	-.3668			-.1181	-.2080	-.2640	-.3698
.080				-.2699			
.085			-.1221				
.086		.0281					
.094	-.1804						
.150				-.4148	-.5199	-.5156	-.5482
.163		.0003					
.177			-.2347				
.193		-.0400					
.229	.0333						
.250				-.4749	-.5847	-.5720	-.6903
.274			-.3204				
.339		-.2566					
.362	.0145						
.400				-.5355	-.6915		-.8377
.402			-.4379				
.497	.0000						
.550				-.1947	-.3243		
.565			.0000				
.600							-.7821
.650						-.4262	
.700	-.0725				-.2477		
.725				-.2321			
.750						-.2067	-.5101
.760			-.2228				
.775				-.2156	-.2421		
.800			-.2223				
.834	-.2091						
.850				-.2245	-.1589	-.0719	
.857			-.2339				
.865	-.1836						
.900	-.2009			-.1947			-.1992
.905			-.2173		-.0620		
.950				-.1401		.0021	
.953			-.1815				
.965	-.2127						

ARC11-716 IA14 O1+T12+S12N25+AT11 UPPER WING (RB1U38)

ALPHAO(4) = 4.000 BETAO (5) = 8.160

SECTION (1)UPPER WING DEPENDENT VARIABLE CP

X/CW \ Y/BW	.2990	.3640	.4270	.5340	.6730	.7800	.8870
.000	-.6873	-.0657	.0301	.1723	.4333	.4149	.4152
.020				-.0761	.0378	-.0307	-.1156
.025			-.0155				
.040		-.0233					
.045			-.0410				
.050	-.4307			-.1553	-.1712	-.2171	-.3205
.080				-.2246			
.085			-.0773				
.086		-.0037					
.094	-.3210						
.150				-.2973	-.4097	-.4538	-.4854
.163		.0000					
.177			-.1680				
.193		-.0618					
.229	.0370						
.250				-.3214	-.4715	-.5525	-.6199
.274			-.2244				
.339		-.2034					
.362	.0130						
.400				-.2138	-.3811		-.7204
.402			-.2146				
.497	.0000						
.550				-.1904	-.3279		
.565			.0000				
.600							-.5740
.650						-.4260	
.700	-.0756				-.2658		
.725				-.2482			
.750						-.3152	-.2705
.780			-.2404				
.775				-.2405	-.2918		
.808			-.2589				
.834	-.2545						
.850				-.2205	-.2252	-.1365	
.857			-.2472				
.865	-.2259						
.900	-.2332			-.1771			-.0718
.905			-.2039		-.0974		
.950				-.1367		-.0515	
.953			-.1631				
.965	-.1844						

ARC11-716 IA14 O1+T12+S12R25+A711 UPPER WING (RB1U38)

ALPHAO(5) = 7.930 BETAO (1) = -8.010

SECTION (1)UPPER WING DEPENDENT VARIABLE CP

Y/BW	.2990	.3640	.4270	.5340	.6730	.7800	.8870
X/CW							
.000	.0082	-.1525	.4461	.7324	.6682	.5678	.5007
.020				-.1570	-.1707	-.3123	-.4238
.025			-.0727				
.040		-.0244					
.045			-.2174				
.050	-.1433			-.3725	-.4531	-.5158	-.6382
.060				-.5403			
.065			-.3945				
.086		-.0034					
.094	-.1461						
.150				-.7737	-.7727	-.7783	-.7367
.163		.0000					
.177			-.5287				
.193		-.2142					
.229	-.0854						
.250				-.9079	-.8505	-.7224	-.7192
.274			-.5681				
.339		-.4316					
.362	-.0039						
.400				-.9706	-.7858		-.7207
.402			-.6786				
.497	.0000						
.500				-.8287	-.7217		
.565			.0000				
.600							-.6320
.650						-.6296	
.700	-.5821				-.3038		
.725				-.6513			
.750						-.5708	-.6014
.760			-.2461				
.775				-.5867	-.6230		
.800			-.1159				
.834	-.0854						
.850				-.4705	-.6004	-.5107	
.857			-.0957				
.865	.0274						
.900	.0089			-.3698			-.5949
.905			-.0682		-.5521		
.950				-.2758		-.4844	
.953			-.0508				
.965	-.0520						

ARC11-716 IA14 O1+T12+S12N25+AT11 UPPER WING (RB1U38)

ALPHAO(5) = 7.930 BETAO (2) = -5.990

SECTION (1)UPPER WING DEPENDENT VARIABLE CP

X/CW \ Y/BW	.2990	.3640	.4270	.5340	.6730	.7800	.8870
.000	-.1250	-.3391	.4230	.6918	.6423	.5334	.4588
.020				-.1029	-.1404	-.2952	-.4307
.025			-.0091				
.040		.0416					
.045			-.1509				
.050	-.2421			-.3188	-.4193	-.4991	-.6407
.080				-.4791			
.085			-.3133				
.086		.0779					
.094	-.2420						
.150				-.7083	-.7381	-.7559	-.7824
.163		.0000					
.177			-.4278				
.193		-.1314					
.229	-.0638						
.250				-.8506	-.8670	-.8119	-.8142
.274			-.5004				
.339		-.3797					
.362	.0295						
.400				-.8885	-.8783		-.8132
.402			-.6339				
.497	.0000						
.550				-.8322	-.7821		
.565			.0000				
.600							-.7041
.650						-.6870	
.700	-.5492				-.2936		
.725				-.4035			
.750						-.6033	-.6666
.760			-.2185				
.775				-.3152	-.6330		
.808			-.1259				
.834	-.0898						
.850				-.2626	-.3740	-.4881	
.857			-.1158				
.865	-.0480						
.900	-.0570			-.2222			-.6613
.905			-.0974		-.4588		
.950				-.2021		-.4744	
.953			-.0834				
.965	-.1221						

ARC11-716 IA14 O1+T12+S12N25+AT11 UPPER WING (RB1U30)

ALPHAO(5) = 7.930 BETAO (3) = .040

SECTION (1)UPPER WING DEPENDENT VARIABLE CP

Y/BW	.2990	.3640	.4270	.5340	.6730	.7800	.8870
X/CW							
.000	-.2849	.2350	.3407	.6137	.5930	.4975	.4205
.020				-.0601	-.1166	-.2762	-.4225
.025			-.0092				
.040		.0286					
.045			-.1363				
.050	-.3284			-.2805	-.3881	-.4779	-.6292
.080				-.4355			
.085			-.2627				
.086		.0655					
.094	-.3171						
.150				-.6256	-.7011	-.7326	-.7685
.163		.0000					
.177			-.3691				
.193		-.1010					
.229	.0755						
.250				-.7617	-.8238	-.8586	-.8626
.274			-.4492				
.339		-.3454					
.362	.0120						
.400				-.7998	-.8614		-.8636
.402			-.5830				
.497	.0000						
.550				-.7278	-.8430		
.565			.0000				
.600							-.7565
.650						-.7231	
.700	-.3905				-.2806		
.725				-.3434			
.750						-.6197	-.7008
.760			-.2251				
.775				-.2639	-.4822		
.800			-.1645				
.834	-.1525						
.850				-.2427	-.2856	-.5124	
.857			-.1873				
.865	-.1435						
.900	-.1759			-.2219			-.6870
.905			-.1739		-.1092		
.950				-.2072		-.5277	
.953			-.1522				
.965	-.2016						

ARC11-716 IA14 O1+T12+S12N25+AT11 UPPER WING (RB1U38)

ALPHAO(5) = 7.930 BETAO (4) = 4.110

SECTION (1)UPPER WING DEPENDENT VARIABLE CP

X/CW \ Y/BW	.2990	.3640	.4270	.5340	.6730	.7800	.8870
.000	-.5012	-.1811	.0697	.4497	.5177	.4405	.3656
.020				-.1370	-.1247	-.2768	-.4274
.025			-.1026				
.040		-.0614					
.045			-.1545				
.050	-.4054			-.2998	-.3906	-.4697	-.6289
.080				-.4280			
.085			-.2137				
.086		-.0342					
.094	-.2967						
.150				-.5659	-.6839	-.7119	-.7560
.163		.0000					
.177			-.3103				
.193		-.1127					
.229	.0195						
.250				-.6156	-.7905	-.8335	-.8531
.274			-.3783				
.339		-.3105					
.362	-.0258						
.400				-.6675	-.8272		-.8826
.402			-.4986				
.497	.0000						
.550				-.3756	-.7419		
.555			.0000				
.600							-.7798
.650						-.7471	
.700	-.1478				-.2630		
.725				-.3088			
.750						-.6205	-.7148
.760			-.2514				
.775				-.2765	-.2538		
.808			-.2698				
.834	-.2462						
.850				-.2588	-.1735	-.4258	
.857			-.2704				
.865	-.2291						
.900	-.2457			-.2240			-.6615
.905			-.2469		-.1015		
.950				-.1787		-.1792	
.953			-.1981				
.965	-.2281						

ARC11-716 IA14 O1+T12+S12N25+AT11 UPPER WING (R81U38)

ALPHAO(5) = 7.910 BETAO (5) = 6.200

SECTION (1)UPPER WING DEPENDENT VARIABLE CP

Y/BW	.2990	.3640	.4270	.5340	.6730	.7800	.8870
X/CW							
.000	-.6843	-.1078	-.0806	.0096	.4379	.4036	.3322
.020				-.3288	-.1761	-.2718	-.4210
.025			-.0924				
.040		-.0674					
.045			-.1218				
.050	-.5800			-.3417	-.4102	-.4565	-.6103
.080				-.3813			
.085			-.1600				
.086		-.0603					
.094	-.5164						
.150				-.4079	-.6351	-.6843	-.7347
.163		.0000					
.177			-.2402				
.193		-.1726					
.229	-.0489						
.250				-.3843	-.6624	-.7943	-.8336
.274			-.2957				
.339		-.2979					
.362	-.0106						
.400				-.2803	-.6246		-.8990
.402			-.2844				
.497	.0000						
.550				-.2400	-.3960		
.565			.0000				
.600							-.7831
.650						-.4279	
.700	-.1330				-.2915		
.725				-.2628			
.750						-.2700	-.6463
.760			-.2691				
.775				-.2565	-.3067		
.808			-.2954				
.834	-.2878						
.850				-.2099	-.1769	-.0853	
.857			-.2648				
.865	-.2586						
.900	-.2497			-.1653			-.4529
.905			-.2154		-.0912		
.950				-.1304		-.0378	
.953			-.1731				
.965	-.1821						

ARC11-716 IA14 O1+T12+S12N25+AT11 UPPER WING (RB1U39) (15 FEB 74)

REFERENCE DATA

SREF = 2.4210 SQ.FT. XMRP = 29.5800 INCHES
LREF = 38.7090 INCHES YMRP = .0000 INCHES
BREF = 38.7090 INCHES ZMRP = .0000 INCHES
SCALE = .0300 SCALE

PARAMETRIC DATA

MACH = 1.150 ELEVON = .000
RUDDER = .000 SPOBRK = .000

ALPHAO(1) = -8.110 BETAO (1) = -8.020

SECTION (1)UPPER WING DEPENDENT VARIABLE CP

X/CW \ Y/BW	.2990	.3640	.4270	.5340	.6730	.7800	.8870
.000	-.0736	-.0706	.4257	.5745	.4828	.4119	.4380
.020				.6242	.5890	.6060	.6123
.025			.5083				
.040		.0856					
.045			.4371				
.050	-.0017			.4178	.3993	.4149	.4137
.080				.2450			
.085			.3120				
.086		.1793					
.094	-.0028						
.150				.0155	.0434	.0866	.0966
.163		.0000					
.177			.0861				
.193		.2300					
.229	.0432						
.250				-.1397	-.1364	-.1446	-.1634
.274			-.0383				
.339		-.0337					
.362	.1676						
.400				-.2872	-.3423		-.3901
.402			-.2320				
.497	.0000						
.550				.1187	-.0176		
.565			.0000				
.600							-.4504
.650						-.0677	
.700	.2408				-.1216		
.725				.0486			
.750						.1329	.0122
.760			.0710				
.775				.2502	.1901		
.808			.2966				
.834	.1323						
.850				.3114	.3087	.3115	
.857			.3048				
.865	.3002						
.900	.2958			.3177			.2961
.905			.3028		.2930		

ARC11-716 IA14 O1+T12+S12N25+AT11 UPPER WING (RB1U39)

ALPHAO(1) = -8.110 BETAO (1) = -8.020

SECTION (1)UPPER WING DEPENDENT VARIABLE CP

Y/BW	.2990	.3640	.4270	.5340	.6730	.7800	.8870
X/CW							
.950				.2802		.3014	
.953			.2642				
.965	.2436						

ALPHAO(1) = -8.100 BETAO (2) = -4.000

SECTION (1)UPPER WING DEPENDENT VARIABLE CP

Y/BW	.2990	.3640	.4270	.5340	.6730	.7800	.8870
X/CW							
.000	-.1498	-.1292	.3234	.4788	.3788	.3038	.3367
.020				.5834	.5502	.5797	.5866
.025			.4290				
.040		.0092					
.045			.3793				
.050	-.0701			.3961	.3954	.4233	.4285
.080				.2429			
.085			.2795				
.086		.1230					
.094	-.0565						
.150				.0452	.0893	.1258	.1379
.163		.0000					
.177			.1069				
.193		.1756					
.229	-.0179						
.250				-.1026	-.0961	-.0734	-.0996
.274			.0095				
.339		-.0117					
.362	.1099						
.400				.1049	.0701		-.1574
.402			-.0637				
.497	.0000						
.550				.1116	-.0015		
.565			.0000				
.600							-.1889
.650						-.1225	
.700	.2468				-.1338		
.725				.0271			
.750						-.0486	-.0751
.760			.0542				
.775				.0929	.0236		
.808			.1024				
.834	.0821						
.850				.2306	.1995	.1884	

ARC11-716 IA14 D1+T12+S12N25+AT11 UPPER WING (RB1039)

ALPHAO(1) = -8.100 BETAO (2) = -4.000

SECTION (1)UPPER WING DEPENDENT VARIABLE CP

Y/BW	.2990	.3640	.4270	.5340	.6730	.7800	.8870
X/CW							
.857			.2332				
.865	.2213						
.900	.2216			.2633			.2186
.905			.2471		.2587		
.950				.2416		.2539	
.953			.2214				
.955	.1913						

ALPHAO(1) = -8.030 BETAO (3) = .030

SECTION (1)UPPER WING DEPENDENT VARIABLE CP

Y/BW	.2990	.3640	.4270	.5340	.6730	.7800	.8870
X/CW							
.000	-.2150	-.1055	.3348	.4221	.2892	.1888	.1981
.020				.5891	.5452	.5649	.5504
.025			.4472				
.040		.0004					
.045			.3853				
.050	-.1106			.4343	.4295	.4445	.4328
.080				.3112			
.085			.3271				
.086		.1122					
.004	-.0950						
.150				.1474	.1821	.2048	.1840
.163		.0000					
.177			.1695				
.193		.1942					
.229	-.0678						
.250				.0226	.0317	.0343	-.0332
.274			.1108				
.339		.0981					
.362	.1168						
.400				.0808	.0225		-.1647
.402			.0514				
.497	.0000						
.550				.0758	-.0224		
.565			.0000				
.600							-.2197
.650						-.1424	
.700	.2153				-.1525		
.725				-.0100			
.750						-.0924	-.1276
.760			.0293				

ARC11-716 IA14 O1+T12+S12N25+AT11 UPPER WING (RB1U39)

ALPHAO(1) = -8.090 BETAO (3) = .030

SECTION (1)UPPER WING DEPENDENT VARIABLE CP

Y/BW	.2990	.3640	.4270	.5340	.6730	.7800	.8870
X/CW							
.775				.0161	-.0348		
.808			.0529				
.834	.0143						
.850				.0444	-.0050	-.0011	
.857			.0944				
.865	.1069						
.900	.1113			.1273			.0925
.905			.1443		.1523		
.950				.1544		.1333	
.953			.1451				
.965	.1150						

ALPHAO(1) = -8.100 BETAO (4) = 4.080

SECTION (1)UPPER WING DEPENDENT VARIABLE CP

Y/BW	.2990	.3640	.4270	.5340	.6730	.7800	.8870
X/CW							
.000	-.2335	-.0407	.2237	.3047	.1944	.0887	.0916
.020				.5133	.4979	.5266	.4993
.025			.3189				
.040		.0341					
.043			.2975				
.050	-.1273			.3809	.4281	.4273	.4119
.080				.2852			
.085			.2519				
.086		.1260					
.094	-.0986						
.150				.1712	.2091	.2196	.1836
.163		.0000					
.177			.1666				
.193		.1756					
.229	-.0215						
.250				.0705	.0760	.0598	-.0227
.274			.1318				
.339		.1067					
.362	.1276						
.400				.0813	.0188		-.1575
.402			.0759				
.497	.0000						
.550				.0572	-.0282		
.565			.0000				
.600							-.2371
.650						-.1512	

ARC11-716 IA14 O1+T12+S12N25+AT11 UPPER WING (R81U39)

ALPHAO(1) = -8.100 BETAO (4) = 4.080

SECTION (1)UPPER WING DEPENDENT VARIABLE CP

Y/BW	.2990	.3640	.4270	.5340	.6730	.7800	.8870
X/CW							
.700	.1814				-.1613		
.725				-.0351			
.750						-.1131	-.1746
.750			.0084				
.775				-.0173	-.0654		
.808			-.0133				
.834	-.0153						
.850				-.0243	-.0543	-.0679	
.857			-.0127				
.865	.0156						
.900	.0372			.0122			.0081
.905			.0726		.0157		
.950				.0880		.0341	
.953			.0699				
.965	.0442						

ALPHAO(1) = -8.130 BETAO (5) = 8.160

SECTION (1)UPPER WING DEPENDENT VARIABLE CP

Y/BW	.2990	.3640	.4270	.5340	.6730	.7800	.8870
X/CW							
.000	-.3689	-.0409	.1099	.2345	.0618	-.0472	-.0547
.020				.4785	.4151	.4301	.4035
.025			.2819				
.040		.0154					
.045			.2819				
.050	-.1585			.3709	.3760	.3635	.3542
.080				.2858			
.085			.2565				
.086		.1315					
.094	-.1127						
.150				.1675	.1901	.2035	.1678
.163		.0000					
.177			.1685				
.193		.1898					
.229	-.0093						
.250				.0665	.0715	.0583	-.0147
.274			.1283				
.339		.0909					
.362	.1416						
.400				.0518	.0020		-.1534
.402			.0478				
.497	.0000						

ARC11-716 IA14 O1+T12+S12N25+AT11 UPPER WING (RB1U39)

ALPHAO(1) = -8.130 BETAO (5) = 8.160

SECTION (1)UPPER WING DEPENDENT VARIABLE CP

Y/BW	.2990	.3640	.4270	.5340	.6730	.7800	.8870
X/CW							
.550				.0228	-.0477		
.565			.0000				
.600							-.2482
.650						-.1670	
.700	.1200				-.1763		
.725				-.0735			
.750						-.1289	-.2139
.760			-.0285				
.775				-.0665	-.0975		
.808			-.0808				
.834	-.0566						
.850				-.0790	-.1007	-.1074	
.857			-.1095				
.865	-.0541						
.900	-.0839			-.0961			-.0619
.905			-.0665		-.0656		
.950				-.0432		-.0407	
.953			.0021				
.965	-.0275						

ALPHAO(2) = -4.100 BETAO (1) = -8.030

SECTION (1)UPPER WING DEPENDENT VARIABLE CP

Y/BW	.2990	.3640	.4270	.5340	.6730	.7800	.8870
X/CW							
.000	-.0749	.0212	.5493	.6724	.6152	.5588	.5872
.020				.4971	.4810	.4906	.5026
.025			.4327				
.040		.0726					
.045			.3303				
.050	-.0769			.2613	.2306	.2593	.2520
.080				.0798			
.085			.1521				
.086		.1684					
.094	-.0889						
.150				-.1569	-.1341	-.0905	-.0582
.163		.0000					
.177			-.0420				
.193		.1534					
.229	-.0178						
.250				-.2839	-.3045	-.3013	-.2967
.274			-.1811				
.339		-.1348					

ARC11-716 IA14 O1+T12+S12N25+AT11 UPPER WING (RB1U39)

ALPHAO(2) = -4.100 BETAO (1) = -8.030

SECTION (1)UPPER WING DEPENDENT VARIABLE CP

X/CW \ Y/BW	.2990	.3640	.4270	.5340	.6730	.7800	.8870
.362	.1421						
.400				-.4047	-.4775		-.5089
.432			-.3613				
.497	.0000						
.550				-.2086	-.5120		
.565			.0000				
.600							-.5469
.650						-.5447	
.700	.0465				-.1601		
.725				-.0526			
.750						-.2951	-.3531
.760			.0061				
.775				.0993	.0046		
.808			.1436				
.834	.0417						
.850				.2087	.1254	-.1283	
.857			.2207				
.865	.1738						
.900	.2037			.2643			-.1392
.905			.2561		.2096		
.950				.2453		.1203	
.953			.2335				
.965	.2077						

ALPHAO(2) = -4.110 BETAO (2) = -4.010

SECTION (1)UPPER WING DEPENDENT VARIABLE CP

X/CW \ Y/BW	.2990	.3640	.4270	.5340	.6730	.7800	.8870
.000	-.1397	-.0422	.4551	.5860	.5192	.4363	.4900
.020				.4590	.4467	.4615	.4719
.025			.3763				
.040		.0304					
.045			.2953				
.050	-.1470			.2575	.2259	.2512	.2473
.080				.0984			
.085			.1531				
.086		.1095					
.094	-.1168						
.150				-.1291	-.1074	-.0660	-.0429
.163		.0000					
.177			-.0281				
.193		.1137					

ARC11-716 IA14 O1+T12+S12N25+AT11 UPPER WING (RB1U39)

ALPHAO(2) = -4.110 BETAO (2) = -4.010

SECTION (1)UPPER WING DEPENDENT VARIABLE CP

Y/BW	.2990	.3640	.4270	.5340	.6730	.7800	.8870
X/CW							
.229	-.0571						
.250				-.2354	-.2367	-.2530	-.2727
.274			-.1340				
.339		-.1139					
.352	.0947						
.400				-.3466	-.4112		-.4705
.402			-.2705				
.497	.0000						
.550				-.0035	-.3048		
.565			.0000				
.600							-.5115
.650						-.3285	
.700	.1381				-.1391		
.725				-.0048			
.750						.0013	-.1377
.760			.0231				
.775				.0504	.0602		
.808			.0830				
.834	.0082						
.850				.1719	.1934	.2303	
.857			.1606				
.865	.1327						
.900	.1533			.2467			.0838
.905			.2260		.2361		
.950				.2303		.2487	
.953			.2083				
.965	.1721						

ALPHAO(2) = -4.110 BETAO (3) = .040

SECTION (1)UPPER WING DEPENDENT VARIABLE CP

Y/BW	.2990	.3640	.4270	.5340	.6730	.7800	.8870
X/CW							
.000	-.1875	-.0253	.4304	.5322	.4352	.3508	.3830
.020				.4684	.4248	.4292	.4292
.025			.3631				
.040		.0304					
.045			.2947				
.050	-.2119			.2754	.2362	.2424	.2320
.080				.1271			
.085			.1942				
.086		.1081					
.094	-.1375						

ARC11-716 IA14 O1+T12+S12N25+AT11 UPPER WING (RB1U39)

ALPHAO(2) = -4.110 BETAO (3) = .040

SECTION (1)UPPER WING DEPENDENT VARIABLE CP

Y/BW	.2990	.3640	.4270	.5340	.6730	.7800	.8870
X/CW							
.150				-.0548	-.0625	-.0353	-.0405
.163		.0000					
.177			.0244				
.193		.1492					
.229	-.0877						
.250				-.1705	-.1970	-.2329	-.2610
.274			-.0585				
.339		-.0427					
.362	.1105						
.400				-.2122	-.3435		-.4508
.402			-.1784				
.497	.0000						
.550				.0296	-.0462		
.565			.0300				
.600							-.4077
.650						-.1650	
.700	.1457				-.1539		
.725				-.0367			
.750						-.1159	-.0082
.760			-.0020				
.775				-.0154	-.0698		
.808			-.0070				
.834	-.0310						
.850				-.0227	-.0432	.0632	
.857			-.0062				
.865	.0431						
.900	.0272			-.0027			.1801
.905			.0333		.0931		
.950				.0657		.1567	
.953			.0538				
.965	.0314						

ALPHAO(2) = -4.110 BETAO (4) = 4.170

SECTION (1)UPPER WING DEPENDENT VARIABLE CP

Y/BW	.2990	.3640	.4270	.5340	.6730	.7800	.8870
X/CW							
.000	-.2746	-.0411	.2746	.4339	.3180	.2457	.2959
.020				.4011	.3507	.3869	.4230
.025			.2506				
.040		.0453					
.045			.2086				
.050	-.1858			.2265	.1967	.2165	.2533

ARC11-716 IA14 O1+T12+S12N25+AT11 UPPER WING (RB1U39)

ALPHAO(2) = -4.110 BETAO (4) = 4.170

SECTION (1)UPPER WING DEPENDENT VARIABLE CP

Y/BW	.2990	.3640	.4270	.5340	.6730	.7800	.8870
X/CW							
.080				.0977			
.085			.1399				
.086		.1185					
.094	-.1262						
.150				-.0690	-.0620	.0031	.0017
.163		.0000					
.177			.0092				
.193		.1063					
.229	-.0210						
.250				-.0729	-.1911	-.1678	-.2116
.274			-.0745				
.339		-.0597					
.362	.0936						
.400				-.0355	-.0633		-.2732
.402			-.0508				
.497	.0000						
.550				.0377	-.0603		
.565			.0000				
.600							-.2679
.650						-.2039	
.700	.1420				-.1628		
.725				-.0616			
.750						-.1575	-.1509
.760			-.0331				
.775				-.0480	-.1061		
.808			-.0391				
.834	-.0564						
.852				-.0525	-.0956	-.0834	
.857			-.0489				
.865	-.0030						
.900	-.0083			-.0475			.0350
.905			-.0128		-.0323		
.950				-.0001		.0379	
.953			-.0350				
.965	-.0250						

DATE 10 JAN 75 TABULATED PRESSURE DATA - IA14A - VOL. 6 (RB1U39)

ARCS1-716 IA14 OI+T12+S12N25+AT11 UPPER WING

ALPHAO(2) = -4.130 BETAO (5) = 8.110

SECTION (1)UPPER WING DEPENDENT VARIABLE CP

X/CW \ Y/BW	.2990	.3640	.4270	.5340	.6730	.7800	.8870
.000	-.4590	-.0711	.1264	.3793	.2467	.1443	.1592
.020				.4051	.3496	.3571	.3452
.025			.1441				
.040		-.0417					
.045			.1553				
.050	-.2379			.2774	.2332	.2318	.2148
.080				.1770			
.085			.1588				
.086		.0516					
.094	-.1487						
.150				.0348	.0247	.0210	-.0033
.163		.0000					
.177			.1132				
.193		.0885					
.229	-.0268						
.250				-.0775	-.0994	-.1294	-.1915
.274			.0169				
.339		.0233					
.362	.0621						
.400				-.0670	-.1149		-.2737
.402			-.0529				
.497	.0000						
.550				-.0272	-.1044		
.565			.0000				
.600							-.3077
.650						-.2176	
.700	.0756				-.1835		
.725				-.1063			
.750						-.1743	-.2267
.760			-.0772				
.775				-.0893	-.1313		
.808			-.0977				
.834	-.0867						
.850				-.1121	-.1348	-.1407	
.857			-.1249				
.865	-.0762						
.900	-.1012			-.1231			-.0397
.905			-.0990		-.1066		
.950				-.0976		-.0580	
.953			-.0817				
.965	-.1025						

ARC11-716 IA14 O1+T12+S12N25+AT11 UPPER WING (RB1U39)

ALPHAO(3) = -.330 BETAO (1) = -4.020

SECTION (1)UPPER WING DEPENDENT VARIABLE CP

Y/BW	.2990	.3640	.4270	.5340	.6730	.7800	.8870
X/CW							
.000	-.0632	-.0549	.5028	.6783	.6492	.6269	.6670
.020				.3384	.3319	.3194	.2977
.025			.2853				
.040		.0106					
.045			.1794				
.050	-.1577			.1138	.0651	.0818	.0379
.080				-.0620			
.085			.0086				
.086		.0648					
.094	-.1594						
.150				-.2505	-.2737	-.2329	-.2132
.163		.0000					
.177			-.1411				
.193		.0467					
.229	-.0658						
.250				-.3611	-.4015	-.4122	-.4077
.274			-.2389				
.339		-.1844					
.362	.0727						
.400				-.4482	-.5286		-.5876
.402			-.3601				
.497	.0000						
.550				-.3716	-.5429		
.565			.0000				
.600							-.5976
.650						-.5711	
.700	-.0242				-.1693		
.725				-.1205			
.750						-.3919	-.4994
.760			-.0421				
.775				-.0066	-.0348		
.808			.0471				
.834	-.0145						
.850				.0400	.0696	-.2549	
.857			.0328				
.865	.0717						
.900	.0461			.0772			-.2219
.905			.0737		.1154		
.950				.1115		.0030	
.953			.1207				
.965	.0677						

ARC11-716 TA14 01+T12+S12N25+AT11 UPPER WING (RB1U3C)

ALPHA(3) = -.330 BETA(2) = .040

SECTION (1)UPPER WING DEPENDENT VARIABLE CP

X/CW \ Y/BW	.2990	.3640	.4270	.5340	.6730	.7800	.8870
.000	-.1635	-.0608	.4465	.6256	.5555	.5015	.5623
.020				.3313	.3086	.2902	.2832
.025			.2724				
.040		-.0002					
.045			.1812				
.050	-.2362			.1314	.0658	.0702	.0404
.080				-.0220			
.085			.0290				
.086		.0533					
.094	-.1906						
.150				-.1989	-.2361	-.2214	-.2104
.163		.0000					
.177			-.0966				
.193		.0719					
.229	-.0948						
.250				-.2939	-.3611	-.3870	-.4067
.274			-.1460				
.339		-.1002					
.362	.0834						
.400				-.4028	-.4845		-.5775
.402			-.3051				
.497	.0000						
.550				-.1651	-.4940		
.565			.0000				
.600							-.5780
.650						-.5551	
.700	.0300				-.1650		
.725				-.0643			
.750						-.2264	-.3323
.760			-.0415				
.775				-.0415	-.0561		
.808			-.0310				
.834	-.0586						
.850				-.0576	.0060	.0906	
.857			-.0554				
.865	.0002						
.900	-.0219			-.0506			-.1395
.905			-.0438		.0842		
.950				.0177		.1441	
.953			-.0256				
.965	-.0483						

ARC11-716 IA14 O1+T12+S12N25+AT11 UPPER WING (R81U39)

ALPHAO(3) = -.340 BETAO (3) = 4.070

SECTION (1)UPPER WING DEPENDENT VARIABLE CP

Y/BW	.2990	.3640	.4270	.5340	.6730	.7800	.8870
X/CW							
.000	-.2910	-.1233	.3158	.5244	.4418	.3951	.4410
.020				.2847	.2429	.2305	.2335
.025			.1846				
.040		.0278					
.045			.1230				
.050	-.2567			.0942	.0274	.0338	.0171
.080				-.0461			
.085			.0212				
.086		.0993					
.094	-.1639						
.150				-.2099	-.2349	-.2284	-.2143
.163		.0000					
.177			-.0840				
.193		.0582					
.229	-.0251						
.250				-.2801	-.3241	-.3800	-.3972
.274			-.1720				
.339		-.1356					
.362	.0760						
.400				-.3793	-.4398		-.5497
.402			-.3113				
.497	.0000						
.550				-.0873	-.2154		
.565			.0000				
.600							-.5735
.650						-.2021	
.700	.0197				-.1803		
.725				-.0876			
.750						-.0397	-.1686
.760			-.0908				
.775				-.0724	-.0823		
.808			-.0719				
.834	-.0937						
.850				-.0876	-.0308	.0856	
.857			-.0901				
.865	-.0468						
.900	-.0661			-.0873			.1150
.905			-.0672		.0443		
.950				-.0356		.1259	
.953			-.0584				
.965	-.0754						

ARC11-716 IA14 O1+T12+S12N25+AT11 UPPER WING (RB1U39)

ALPHAO(3) = -.340 BETAO (4) = 8.140

SECTION (1)UPPER WING DEPENDENT VARIABLE CP

Y/BW	.2990	.3640	.4270	.5340	.6730	.7800	.8870
X/CW							
.000	-.5377	-.1082	.1065	.3041	.3891	.3058	.3322
.020				.1998	.2471	.2197	.2036
.025			.0806				
.040		-.0298					
.045			.0606				
.050	-.3497			.0899	.0822	.0496	.0072
.080				-.0044			
.085			.0329				
.086		-.0480					
.094	-.2026						
.150				-.1157	-.1766	-.1882	-.1989
.163		.0000					
.177			-.0347				
.193		.0866					
.229	.0001						
.250				-.2063	-.2862	-.3360	-.3814
.274			-.1142				
.339		-.1050					
.362	.0590						
.400				-.2133	-.3593		-.5298
.402			-.1822				
.497	.0000						
.550				-.1091	-.2071		
.565			.0000				
.600							-.4632
.650						-.2796	
.700	-.0064				-.1994		
.725				-.1579			
.750						-.2118	-.1519
.760			-.1105				
.775				-.1269	-.1616		
.808			-.1338				
.834	-.1346						
.850				-.1512	-.1578	-.1200	
.857			-.1608				
.865	-.1140						
.900	-.1434			-.1617			.0471
.905			-.1510		-.1119		
.950				-.1459		.0024	
.953			-.1437				
.965	-.1670						

ARC11-716 IA14 O1+T12+S12N25+AT11 UPPER WING (RB1U39)

ALPHAO(4) = 4.010 BETAO (1) = -8.060

SECTION (1)UPPER WING DEPENDENT VARIABLE CP

Y/SW	2990	.3640	.4270	.5340	.6730	.7800	.8870
X/CW							
.000	.0704	-.0618	.5520	.7676	.7684	.7215	.6949
.020				.1535	.1477	.0632	-.0075
.025			.1800				
.040		-.0046					
.045			.0441				
.050	-.0646			-.0800	-.1323	-.1612	-.2510
.080				-.2524			
.085			-.1446				
.086		.0570					
.094	-.0831						
.150				-.4828	-.4731	-.4561	-.4456
.153		.0000					
.177			-.2989				
.193		-.0565					
.229	-.0879						
.250				-.5621	-.6127	-.6081	-.5795
.274			-.4071				
.339		-.3023					
.362	.0588						
.400				-.6372	-.7417		-.7293
.402			-.5320				
.497	.0000						
.550				-.6562	-.7192		
.565			.0000				
.600							-.7015
.650						-.7222	
.700	-.4083				-.2428		
.725				-.2827			
.750						-.5745	-.6294
.760			-.1862				
.775				-.1570	-.5484		
.808			-.0548				
.834	-.0099						
.850				-.0593	-.5231	-.4827	
.857			-.0012				
.865	.0635						
.900	.0446			-.0250			-.4654
.905			.0375		-.3384		
.950				-.0248		-.4004	
.955			.0313				
.965	-.0338						

ARC11-716 IA14 O1+T12+S12N25+AT11 UPPER WING (RB1U39)

ALPHAO(4) = 4.010 BETAO (2) = -4.010

SECTION (1)UPPER WING DEPENDENT VARIABLE CP

Y/BW	.2990	.3640	.4270	.5340	.6730	.7800	.8870
X/CW							
.000	-.0266	-.1496	.4561	.7216	.7084	.6641	.6484
.020				.1386	.1526	.0655	-.0111
.025			.1355				
.040		-.0640					
.045			.0107				
.050	-.1506			-.0762	-.1172	-.1426	-.2398
.080				-.2277			
.085			-.1443				
.086		-.0020					
.094	-.1557						
.150				-.4373	-.4380	-.4231	-.4242
.163		.0000					
.177			-.2531				
.193		-.0507					
.229	-.1157						
.250				-.4672	-.5740	-.5743	-.5591
.274			-.2819				
.339		-.2540					
.362	.0386						
.400				-.5238	-.6799		-.7012
.402			-.4317				
.497	.0000						
.550				-.5338	-.6739		
.565			.0000				
.600							-.6712
.650						-.6929	
.700	-.2812				-.2146		
.725				-.1748			
.750						-.5452	-.6057
.760			-.1113				
.775				-.0961	-.2471		
.808			-.0072				
.834	-.0122						
.850				-.0562	-.0537	-.4544	
.857			-.0168				
.865	.0406						
.900	.0164			-.0290			-.4272
.935			-.0051		.0134		
.950				-.0057		-.3926	
.953			-.0073				
.965	-.0484						

ARC11-716 IA14 O1+T12+S12N25+AT11 UPPER WING (RB1U39)

ALPHAO(4) = 4.000 BETAO (3) = .050

SECTION (1)UPPER WING DEPENDENT VARIABLE CP

Y/BW	.2990	.3640	.4270	.5340	.6730	.7800	.8870
X/CW							
.000	-.1812	-.2330	.4026	.6618	.6437	.5980	.5908
.020				.1527	.1420	.0670	-.0049
.025			.1392				
.040		-.0721					
.045			.0348				
.050	-.2346			.0585	-.1068	-.1358	-.2265
.080				-.2133			
.085			-.0835				
.086		-.0079					
.094	-.2448						
.150				-.3508	-.4192	-.4027	-.4143
.163		.0000					
.177			-.1737				
.193		.0110					
.229	-.1199						
.250				-.4136	-.5372	-.5545	-.5524
.274			-.2717				
.339		-.1331					
.362	.0756						
.400				-.4694	-.6200		-.6936
.402			-.4103				
.497	.0000						
.550				-.4321	-.6110		
.565			.0000				
.600							-.6651
.650						-.6780	
.700	-.1692				-.1914		
.725				-.1661			
.750						-.5537	-.5766
.760			-.1271				
.775				-.1030	-.1325		
.808			-.0562				
.834	-.0653						
.850				-.0858	-.0617	-.4004	
.857			-.0872				
.865	-.0390						
.900	-.0868			-.0740			-.3945
.905			-.0915		.0408		
.950				-.0545		-.1195	
.953			-.1003				
.965	-.1201						

ARC11-716 IA14 O1+T12+S12N25+AT11 UPPER WING (RB1U39)

ALPHAO(4) = 4.000 BETAO (4) = 4.100

SECTION (1)UPPER WING DEPENDENT VARIABLE CP

Y/BW	.2990	.3640	.4270	.5340	.6730	.7800	.8870
X/CW							
.000	-.3067	-.3106	.2175	.5434	.5261	.4924	.5212
.020				.1108	.0973	.0312	-.0259
.025			.0477				
.040		-.0509					
.045			-.0132				
.050	-.2859			-.0775	-.1312	-.1657	-.2352
.080				-.2062			
.085			-.1051				
.086		.0184					
.094	-.2201						
.150				-.3547	-.4183	-.4061	-.4160
.163		.0000					
.177			-.1929				
.193		-.0255					
.229	-.0584						
.250				-.4134	-.4989	-.5523	-.5511
.274			-.2671				
.339		-.2060					
.362	.0367						
.400				-.4769	-.5903		-.6915
.402			-.3901				
.497	.0000						
.550				-.3008	-.5766		
.565			.0000				
.600							-.6553
.650						-.6333	
.700	-.1063				-.2008		
.725				-.1360			
.750						-.4314	-.5321
.760			-.1374				
.775				-.0856	-.1529		
.808			-.1001				
.834	-.0983						
.850				-.1014	-.0638	-.0678	
.857			-.1317				
.865	-.0814						
.900	-.1061			-.1072			-.3218
.905			-.1307		.0174		
.950				-.0871		.0473	
.953			-.1144				
.965	-.1345						

ARC11-716 IA14 O1+T12+S12N25+AT11 UPPER WING (RB1U39)

ALPHAO(4) = 3.990 BETAO (5) = 8.140

SECTION (1)UPPER WING DEPENDENT VARIABLE CP

Y/BW	.2990	.3640	.4270	.5340	.6730	.7800	.8870
X/CW							
.000	-.6125	-.1210	.0501	.2332	.4505	.4196	.4345
.020				-.0185	.0907	.0301	-.0316
.025			.0142				
.040		-.0633					
.045			-.0072				
.050	-.4402			-.1048	-.1144	-.1579	-.2309
.080				-.1791			
.085			-.0430				
.086		-.0376					
.094	-.3502						
.150				-.2610	-.3606	-.3850	-.3975
.163		.0000					
.177			-.1276				
.193		-.0090					
.229	.0269						
.250				-.3263	-.4256	-.5091	-.5412
.274			-.1951				
.339		-.1584					
.362	.0381						
.400				-.3515	-.5354		-.6675
.402			-.3013				
.497	.0000						
.550				-.1702	-.3249		
.565			.0000				
.600							-.6343
.650						-.3935	
.700	-.0222				-.2194		
.725				-.1960			
.750						-.2242	-.3928
.760			-.1574				
.775				-.1715	-.1952		
.808			-.1831				
.834	-.1708						
.850				-.1897	-.1708	-.0789	
.857			-.2001				
.865	-.1600						
.900	-.1840			-.1842			-.1377
.905			-.1872		-.0849		
.950				-.1545		.0117	
.953			-.1699				
.965	-.1913						

ARC11-716 IA14 D1+T12+S12N25+AT11 UPPER WING (RB1U39)

ALPHAO(5) = 7.920 BETAO (1) = -8.050

SECTION (1)UPPER WING DEPENDENT VARIABLE CP

X/CW \ Y/BW	.2990	.3640	.4270	.5340	.6730	.7800	.8870
.000	.0844	-.0434	.5002	.7980	.7434	.6628	.6052
.020				-.0220	-.0197	-.1412	-.2393
.025			.0058				
.040		-.0143					
.045			-.1234				
.050	-.0382			-.2388	-.2974	-.3451	-.4501
.080				-.4005			
.085			-.2987				
.086		.0066					
.094	-.0825						
.150				-.6227	-.6006	-.5978	-.6003
.163		.0000					
.177			-.4700				
.193		-.1593					
.229	-.0825						
.250				-.7227	-.7233	-.7253	-.6971
.274			-.5203				
.339		-.3923					
.362	.0223						
.400				-.7742	-.7611		-.7456
.402			-.5979				
.497	.0000						
.550				-.7592	-.7669		
.565			.0000				
.600							-.7243
.650						-.6916	
.700	-.4847				-.2682		
.725				-.5359			
.750						-.5883	-.6246
.760			-.2587				
.775				-.4836	-.6271		
.808			-.1761				
.834	-.0141						
.850				-.2763	-.5939	-.5316	
.857			-.1206				
.865	.0349						
.900	.0101			-.1546			-.6320
.905			-.0581		-.5248		
.950				-.0950		-.4809	
.953			-.0135				
.965	-.0007						

ARC11-716 IA14 O1+T12+S12N25+AT11 UPPER WING (R81U39)

ALPHAO(5) = 7.930 BETAO (2) = -3.990

SECTION (1)UPPER WING DEPENDENT VARIABLE CP

Y/BW	.2990	.3640	.4270	.5340	.6730	.7800	.8870
X/CW							
.000	-.0409	-.2152	.3662	.7170	.7010	.6134	.5530
.020				-.0552	-.0290	-.1541	-.2726
.025			-.0571				
.040		-.1570					
.045			-.1786				
.050	-.1357			-.2460	-.2917	-.3510	-.4714
.080				-.3933			
.085			-.3228				
.086		-.1043					
.094	-.1689						
.150				-.5813	-.5829	-.5946	-.6137
.163		.0000					
.177			-.3265				
.193		-.1708					
.229	-.1712						
.250				-.6379	-.7036	-.7166	-.7053
.274			-.3622				
.339		-.2120					
.362	-.0057						
.400				-.6422	-.7991		-.7999
.402			-.4914				
.497	.0000						
.550				-.6286	-.7668		
.565			.0000				
.600							-.7672
.650						-.7742	
.700	-.4255				-.2473		
.725				-.2484			
.750						-.6056	-.6676
.760			-.1843				
.775				-.2204	-.6151		
.808			-.1011				
.834	-.0141						
.850				-.1875	-.5469	-.5217	
.857			-.0936				
.865	.0035						
.900	-.0417			-.1469			-.6616
.905			-.0705		-.3072		
.950				-.1015		-.4715	
.953			-.0648				
.965	-.1070						

DATE 10 JAN 75 TABULATED PRESSURE DATA - IA14A - VOL. 6

ARC11-716 IA14 O1+T12+S12N25+AT11 UPPER WING (RB1U39)

ALPHAO(5) = 7.930 BETAO (3) = .040

SECTION (1)UPPER WING DEPENDENT VARIABLE CP

X/CW \ Y/BW	.2990	.3640	.4270	.5340	.6730	.7800	.8870
.000	-.1880	-.4316	.3246	.6495	.6476	.5700	.5055
.020				-.0108	-.0164	-.1457	-.2670
.025			-.0059				
.040		-.2352					
.045			-.0062				
.050	-.2381			-.1984	-.2779	-.3385	-.4671
.080				-.3486			
.085			-.2198				
.086		-.0370					
.094	-.2401						
.150				-.5372	-.5672	-.5840	-.6067
.163		.0000					
.177			-.2947				
.193		-.0510					
.229	-.1615						
.250				-.6203	-.6859	-.7016	-.7016
.274			-.3687				
.339		-.2563					
.362	.0865						
.400				-.6701	-.7747		-.7988
.402			-.4878				
.497	.0000						
.550				-.6613	-.7610		
.565			.0000				
.600							-.7690
.650						-.7658	
.700	-.4252				-.2396		
.725				-.3112			
.750						-.6296	-.6619
.760			-.1639				
.775				-.2494	-.3440		
.808			-.1055				
.834	-.0438						
.850				-.2054	-.1635	-.5484	
.857			-.1172				
.865	-.0380						
.900	-.1059			-.1748			-.6288
.905			-.1187		-.1054		
.950				-.1476		-.5098	
.953			-.1364				
.965	-.1580						

ARC11-716 IA14 O1+T12+S12N25+AT11 UPPER WING (RB1U39)

ALPHAO(5) = 7.930 BETAO (4) = 4.120

SECTION (1)UPPER WING DEPENDENT VARIABLE CP

Y/BW	.2990	.3640	.4270	.5340	.6730	.7800	.8870
X/CW							
.000	-.3655	-.3886	.0812	.4844	.5426	.4946	.4565
.020				-.1085	-.0605	-.1680	-.2722
.025			-.0852				
.040		-.1539					
.045			-.1286				
.050	-.3099			-.2562	-.3006	-.3483	-.4654
.080				-.3750			
.085			-.1994				
.085		-.0620					
.094	-.2977						
.150				-.5263	-.5656	-.5759	-.5990
.163		.0000					
.177			-.2887				
.193		-.0833					
.229	-.0605						
.250				-.6220	-.6719	-.6891	-.6934
.274			-.3409				
.339		-.2855					
.362	.0086						
.400				-.6592	-.7382		-.7916
.402			-.4574				
.497	.0000						
.550				-.4959	-.7202		
.565			.0000				
.600							-.7629
.650						-.7635	
.700	-.1669				-.2218		
.725				-.2984			
.750						-.6280	-.6221
.760			-.1680				
.775				-.2055	-.2148		
.808			-.1555				
.834	-.1394						
.850				-.1938	-.1543	-.5664	
.857			-.1766				
.865	-.1266						
.900	-.1517			-.2060			-.5031
.905			-.1791		-.0797		
.950				-.1835		-.3328	
.953			-.1791				
.965	-.1855						

ARC11-716 IA14 O1+T12+S12N25+AT11 UPPER WING (RB1U39)

ALPHAO(5) = 7.910 BETAO (5) = 8.200

SECTION (1)UPPER WING DEPENDENT VARIABLE CP

Y/BW	.2990	.3640	.4270	.5340	.6730	.7800	.8870
X/CW							
.000	-.6323	-.1587	-.0446	.0579	.4379	.4204	.3917
.020				-.2513	-.1165	-.1836	-.2875
.025			-.0652				
.040		-.0729					
.045			-.0834				
.050	-.5060			-.2877	-.3359	-.3556	-.4709
.080				-.3357			
.085			-.1200				
.086		-.0541					
.094	-.4786						
.150				-.3657	-.5523	-.5730	-.6000
.163		.0000					
.177			-.2052				
.193		-.1457					
.229	.0109						
.250				-.4936	-.6046	-.6768	-.6936
.274			-.2716				
.339		-.2503					
.362	.0102						
.400				-.4844	-.6421		-.7890
.402			-.3581				
.497	.0000						
.550				-.3133	-.4412		
.565			.0000				
.600							-.7518
.650						-.6730	
.700	-.0797				-.2501		
.725				-.3090			
.750						-.3293	-.5824
.760			-.1990				
.775				-.3030	-.2541		
.808			-.2446				
.834	-.2177						
.850				-.3003	-.1983	-.1335	
.857			-.2397				
.865	-.2049						
.900	-.2310			-.2777			-.4821
.905			-.2090		-.0976		
.950				-.2342		-.0275	
.953			-.1715				
.965	-.1917						

ARC11-716 IA14 O1+T12+S12N25+AT11 UPPER WING (RB1U40) (15 FEB 74)

REFERENCE DATA

SREF = 2.4210 SQ.FT. XMRP = 29.5800 INCHES
LREF = 38.7090 INCHES YMRP = .0000 INCHES
BREF = 38.7090 INCHES ZMRP = .0000 INCHES
SCALE = .0300 SCALE

PARAMETRIC DATA

MACH = 1.400 ELEVON = .000
RUDDER = .000 SPDBRK = .000

ALPHAO(1) = -7.920 BETAO (1) = -8.040

SECTION (1)UPPER WING DEPENDENT VARIABLE CP

Y/BW	.2990	.3640	.4270	.5340	.6730	.7800	.8870
X/CW							
.000	.1105	.0196	.3544	.6284	.5686	.5015	.5403
.020				.6510	.6305	.6487	.6621
.025			.4420				
.040		.1035					
.045			.3770				
.050	.0447			.4453	.4670	.4781	.4813
.080				.2819			
.085			.2808				
.086		.1769					
.094	.0557						
.150				.0592	.1042	.1668	.2055
.163		.0000					
.177			.1029				
.193		.1970					
.229	.0762						
.250				-.1006	-.0536	-.0343	-.0218
.274			-.0111				
.339		.0006					
.362	.1612						
.400				-.2217	-.2263		-.2251
.402			-.1747				
.497	.0000						
.550				-.2826	[illegible]715		
.565			.0000				
.600							-.3046
.650						-.3197	
.700	-.1207				-.1146		
.725				-.0512			
.750						-.2976	-.3039
.760			.0389				
.775				.0971	-.1912		
.838			.1954				
.834	.1442						
.850				.1446	-.0727	-.2352	
.857			.1951				
.865	.2244						
.900	.2139			.1560			-.2161
.905			.1939		.0092		

ARC11-71G IA14 O1+T12+S12N25>AT11 UPPER WING (RB1U40)

ALPHAO(1) = -7.920 BETAO (1) = -8.040

SECTION (1)UPPER WING DEPENDENT VARIABLE CP

X/CW \ Y/BW	.2990	.3640	.4270	.5340	.6730	.7800	.8870
.930				.1623		-.0587	
.953			.1778				
.965	.1534						

ALPHAO(1) = -7.910 BETAO (2) = -1.000

SECTION (1)UPPER WING DEPENDENT VARIABLE CP

X/CW \ Y/BW	.2990	.3640	.4270	.5340	.6730	.7800	.8870
.000	.0225	-.0550	.2242	.5180	.4496	.3841	.4193
.020				.5934	.5600	.5872	.5938
.025			.3549				
.040		.0395					
.045			.3122				
.050	-.0309			.4086	.4298	.4387	.4342
.080				.2695			
.085			.2348				
.086		.1254					
.094	.0022						
.150				.0631	.1003	.1518	.1843
.163		.0000					
.177			.0981				
.193		.1629					
.229	.0416						
.250				-.1072	-.0520	-.0300	-.0263
.278			-.0140				
.339		-.0130					
.362	.1225						
.400				-.2349	-.2125		-.2215
.402			-.1800				
.497	.0000						
.550				-.2809	-.2599		
.565			.0000				
.600							-.3100
.650						-.3042	
.700	-.1145				-.1145		
.725				-.0327			
.750						-.2837	-.3023
.760			.0428				
.775				.1093	-.1079		
.808			.1654				
.834	.1145						
.850				.1399	.0035	-.1231	

ARC11-716 IA14 O1+T12+S12N25+AT11 UPPER WING (RB1U40)

ALPHAO(1) = -7.910 BETAO (2) = -4.000

SECTION (1)UPPER WING DEPENDENT VARIABLE CP

X/CW \ Y/BW	.2990	.3640	.4270	.5340	.6730	.7800	.8870
.857			.1492				
.865	.1770						
.900	.1600			.1274			-.2119
.905			.1479		.1580		
.950				.1213		-.0470	
.953			.1309				
.965	.1025						

ALPHAO(1) = -7.900 BETAO (3) = .030

SECTION (1)UPPER WING DEPENDENT VARIABLE CP

X/CW \ Y/BW	.2990	.3640	.4270	.5340	.6730	.7800	.8870
.000	-.0828	-.1139	.1467	.3728	.3009	.2430	.2777
.020				.5204	.4690	.4966	.5021
.025			.2833				
.040		-.0213					
.045			.2468				
.050	-.1028			.3640	.3740	.3791	.3788
.080				.2412			
.085			.1942				
.086		.0736					
.094	-.0505						
.150				.0601	.0850	.1341	.1660
.163		.0000					
.177			.0812				
.193		.1322					
.229	.0070						
.250				-.0989	-.0543	-.0353	-.0367
.274			-.0078				
.339		-.0258					
.362	.0858						
.400				-.2186	-.1935		-.2187
.402			-.1687				
.497	.0000						
.550				-.2541	-.2442		
.565			.0000				
.600							-.3038
.650						-.2831	
.700	-.0558				-.1042		
.725				.0312			
.750						-.2363	-.2901
.760			.0508				

ARC11-716 IA14 01+T12+S12N25+AT11 UPPER WING (RB1U40)

ALPHAO(1) = -7.900 BETAO (3) = .030

SECTION (1)UPPER WING DEPENDENT VARIABLE CP

Y/BW	.2990	.3640	.4270	.5340	.6730	.7800	.8870
X/CW							
.775				.1283	.0760		
.808			.1220				
.834	.0920						
.850				.1193	.1218	-.0490	
.857			.0992				
.865	.1296						
.900	.1171			.0923			-.1084
.905			.0942		.1430		
.950				.0767		.0154	
.953			.0851				
.965	.0554						

ALPHAO(1) = -7.910 BETAO (4) = 4.100

SECTION (1)UPPER WING DEPENDENT VARIABLE CP

Y/BW	.2990	.3640	.4270	.5340	.6730	.7800	.8870
X/CW							
.000	-.1543	-.1071	.1160	.3035	.1987	.1278	.1910
.020				.4520	.3881	.4088	.4307
.025			.2325				
.040		-.0532					
.045			.2143				
.050	-.1398			.3222	.3154	.3203	.3285
.080				.2197			
.085			.1630				
.086		.0284					
.094	-.0734						
.150				.0621	.0781	.1179	.1443
.163		.0000					
.177			.0786				
.193		.1181					
.229	-.0206						
.250				-.1235	-.0523	-.0388	-.0392
.274			.0058				
.339		-.0242					
.362	.0765						
.400				-.2560	-.1770		-.2058
.402			-.1512				
.497	.0000						
.550				-.2805	-.2269		
.565			.0000				
.600							-.2840
.650						-.2613	

ARC11-716 IA14 O1+T12+S12N25+AT11 UPPER WING (RB1U40)

ALPHAO(1) = -7.910 BETAO (4) = 4.100

SECTION (1)UPPER WING DEPENDENT VARIABLE CP

Y/BW	.2990	.3640	.4270	.5340	.6730	.7800	.8870
X/CW							
.700	-.0333				-.1040		
.725				.0350			
.750						-.1206	-.2738
.760			.0424				
.775				.0734	.1322		
.808			.0910				
.834	.0835						
.850				.0493	.1290	.0525	
.857			.0524				
.865	.0981						
.900	.0651			.0137			-.0083
.905			.0430		.1165		
.950				-.0045		.1577	
.953			.0428				
.965	.0164						

ALPHAO(1) = -8.000 BETAO (5) = 8.190

SECTION (1)UPPER WING DEPENDENT VARIABLE CP

Y/BW	.2990	.3640	.4270	.5340	.6730	.7800	.8870
X/CW							
.000	-.2336	-.1163	.0987	.2039	.0821	.0631	.0815
.020				.3603	.3091	.3621	.3523
.025			.1755				
.040		-.0474					
.045			.1657				
.050	-.1994			.2616	.2799	.2905	.2764
.080				.1814			
.085			.1303				
.086		.0253					
.094	-.1016						
.150				.0506	.0804	.1113	.1172
.163		.0000					
.177			.0579				
.193		.1090					
.229	-.0413						
.250				-.1505	-.0466	-.0352	-.0426
.274			-.0060				
.339		-.0449					
.362	.0680						
.400				-.2765	-.1591		-.1895
.402			-.1606				
.497	.0000						

ARC11-715 IA14 O1+T12+S12N25+AT11 UPPER WING (RB1U40)

ALPHAO(1) = -8.000 BETAO (5) = 8.190

SECTION (1)UPPER WING DEPENDENT VARIABLE CP

Y/BW	.2990	.3640	.4270	.5340	.6730	.7800	.8870
X/CW							
.550				-.2131	-.2072		
.565			.0000				
.600							-.2640
.650						-.2204	
.700	-.0108				-.1054		
.725				-.0037			
.750						.0146	-.2060
.760			.0536				
.775				.0584	.0985		
.808			.0688				
.834	.0596						
.850				.0059	.1171	.0961	
.857			.0188				
.865	.0657						
.900	.0276			-.0432			.0895
.905			.0056		.0992		
.950				-.0600		.1411	
.953			-.0070				
.965	-.0255						

ALPHAO(2) = -4.010 BETAO (1) = -8.050

SECTION (1)UPPER WING DEPENDENT VARIABLE CP

Y/BW	.2990	.3640	.4270	.5340	.6730	.7800	.8870
X/CW							
.000	.1141	.0128	.4327	.6841	.6405	.5841	.6262
.020				.5611	.5641	.5672	.5924
.025			.3646				
.040		.0629					
.045			.2764				
.050	.0303			.3397	.3648	.3672	.3772
.080				.1706			
.085			.1520				
.086		.1370					
.094	.0261						
.150				-.0449	-.0172	.0523	.1056
.163		.0000					
.177			-.0025				
.193		.1033					
.229	.0181						
.250				-.2275	-.1642	-.1299	-.1084
.274			-.1157				
.339		-.0875					

ARC11-716 IA14 O1+T12+S12N25+AT11 UPPER WING (RB1U40)

ALPHAO(2) = -4.010 BETAO (1) = -8.050

SECTION (1)UPPER WING DEPENDENT VARIABLE CP

Y/BW	.2990	.3640	.4270	.5340	.6730	.7800	.8870
X/CW							
.362	.0869						
.400				-.3277	-.3145		-.2996
.402			-.2461				
.437	.0000						
.550				-.3807	-.3575		
.565			.0000				
.600							-.3371
.650						-.3935	
.700	-.1834				-.1438		
.725				-.2409			
.750						-.3829	-.3687
.760			-.0333				
.775				-.0659	-.3303		
.808			.0844				
.834	.0648						
.850				-.0196	-.1736	-.3405	
.857			.1216				
.865	.1673						
.900	.1658			.0216			-.2885
.905			.1362		-.1421		
.950				.0576		-.1929	
.953			.1296				
.965	.1005						

ALPHAO(2) = -4.010 BETAO (2) = -4.020

SECTION (1)UPPER WING DEPENDENT VARIABLE CP

Y/BW	.2990	.3640	.4270	.5340	.6730	.7800	.8870
X/CW							
.000	.0197	-.0464	.3357	.5726	.5296	.4870	.5292
.020				.5175	.5111	.5189	.5300
.025			.3116				
.040		.0152					
.045			.2390				
.050	-.0497			.3115	.3324	.3355	.3360
.080				.1571			
.085			.1374				
.086		.0904					
.094	-.0477						
.150				-.0611	-.0141	.0442	.0828
.163		.0000					
.177			-.0201				
.193		.0801					

ARC11-716 IA14 O1+T12+S12N25+AT11 UPPER WING (RB1U40)

ALPHAO(2) = -1.010 BETAO (2) = -4.020

SECTION (1)UPPER WING DEPENDENT VARIABLE CP

Y/BW	.2990	.3640	.4270	.5340	.6730	.7800	.8870
X/CW							
.229	-.0096						
.250				-.2052	-.1604	-.1369	-.1220
.274			-.1219				
.339		-.1061					
.362	.0549						
.400				-.3084	-.3022		-.3083
.402			-.2594				
.497	.0000						
.550				-.3619	-.3435		
.565			.0000				
.600							-.3555
.650						-.3864	
.700	-.1946				-.1378		
.725				-.1524			
.750						-.3712	-.3664
.760			-.0353				
.775				-.0390	-.2639		
.808			.0937				
.834	.0514						
.850				.0267	-.1616	-.2985	
.857			.1004				
.865	.1325						
.900	.1234			.0552			-.2969
.905			.1027		-.1507		
.950				.0707		-.1624	
.953			.0876				
.965	.0544						

ALPHAO(2) = -3.930 BETAO (3) = .030

SECTION (1)UPPER WING DEPENDENT VARIABLE CP

Y/BW	.2990	.3640	.4270	.5340	.6730	.7800	.8870
X/CW							
.000	-.0969	-.0730	.2036	.4510	.4354	.3837	.4380
.020				.4447	.4364	.4418	.4584
.025			.2258				
.040		-.0160					
.045			.1709				
.050	-.1171			.2684	.2778	.2805	.2859
.080				.1341			
.085			.0980				
.086		.0406					
.094	-.1263						

ARC11-716 IA14 O1+T12+S12N25+AT11 UPPER WING (RB1U40)

ALPHAO(2) = -3.930 BETAO (3) = .030

SECTION (1)UPPER WING DEPENDENT VARIABLE CP

Y/BW	.2990	.3640	.4270	.5340	.6730	.7800	.8870
X/CW							
.150				-.0584	-.0233	.0173	.0567
.163		.0000					
.177			-.0222				
.193		.0*10					
.229	-.0275						
.250				-.1895	-.1587	-.1457	-.1365
.274			-.1095				
.339		-.1118					
.362	.0254						
.400				-.2870	-.2921		-.3123
.402			-.2370				
.497	.0000						
.550				-.3323	-.3233		
.565			.0000				
.600							-.3612
.650						-.3685	
.700	-.1624				-.1315		
.725				-.1022			
.750						-.3451	-.3773
.760			-.0331				
.775				.0210	-.1777		
.808			.0834				
.834	.0282						
.850				.0647	-.1128	-.1896	
.857			.0655				
.865	.0844						
.900	.0748			.0610			-.2837
.905			.0602		.0529		
.950				.0524		-.1290	
.953			.0461				
.965	.0129						

ALPHAO(2) = -3.940 BETAO (4) = 4.100

SECTION (1)UPPER WING DEPENDENT VARIABLE CP

Y/BW	.2990	.3640	.4270	.5340	.6730	.7800	.8870
X/CW							
.000	-.1929	-.1203	.1992	.4242	.3528	.2932	.3386
.020				.3744	.3538	.3562	.3692
.025			.1899				
.040		-.0649					
.045			.1489				
.050	-.1678			.2235	.2159	.2205	.2228

ARC11-716 IA14 O1+T12+S12N25+AT11 UPPER WING (RB1U40)

ALPHAO(2) = -3.940 BETAO (4) = 4.100

SECTION (1)UPPER WING DEPENDENT VARIABLE CP

Y/BW	.2990	.3640	.4270	.5340	.6730	.7800	.8870
X/CW							
.080				.1031			
.085			.0861				
.086		.0012					
.094	-.1573						
.150				-.0362	-.0349	-.0045	.0224
.163		.0000					
.177			-.0151				
.193		.0525					
.229	-.0611						
.250				-.1853	-.1507	-.1470	-.1523
.274			-.0793				
.339		-.0897					
.362	.0205						
.400				-.2840	-.2644		-.3080
.402			-.2093				
.497	.0000						
.550				-.3194	-.2989		
.565			.0000				
.600							-.3573
.650						-.3346	
.700	-.1012				-.1327		
.725				-.0494			
.750						-.3012	-.3568
.760			-.0140				
.775				.0453	-.0659		
.808			.0579				
.834	.0167						
.850				.0440	.0319	-.1293	
.857			.0259				
.865	.0539						
.900	.0368			.0146			-.1927
.905			.0158		.0795		
.950				-.0057		-.0990	
.953			.0067				
.965	-.0211						

ARC11-716 IA14 O1+T12+S12N25+AT11 UPPER WING (RB1U40)

ALPHAO(2) = -3.950 BETAO (5) = 8.150

SECTION (1)UPPER WING DEPENDENT VARIABLE CP

Y/BW	.2990	.3640	.4270	.5340	.6730	.7800	.8870
X/CW							
.000	-.3077	-.1217	.0915	.3405	.2702	.1964	.2306
.020				.3065	.2942	.3056	.3092
.025			.1187				
.040		-.1025					
.045			.1212				
.050	-.2679			.1813	.1840	.1971	.1864
.080				.0849			
.085			.0902				
.086		.0056					
.094	-.1899						
.150				-.0397	-.0345	-.0055	.0126
.163		.0000					
.177			-.0082				
.193		.0492					
.229	-.0852						
.250				-.1731	-.1390	-.1318	-.1442
.274			-.0695				
.339		-.0881					
.362	.0316						
.400				-.2731	-.2485		-.2960
.402			-.2090				
.497	.0000						
.550				-.2958	-.2857		
.565			.0000				
.600							-.3510
.650						-.3143	
.700	-.0841				-.1436		
.725				-.0580			
.750						-.2616	-.3107
.760			-.0225				
.775				.0353	-.0263		
.808			.0321				
.834	.0065						
.850				.0137	.0541	-.0745	
.857			.0[illegible]6				
.865	.0356						
.900	.0050			-.0167			-.0845
.905			-.0155		.0663		
.950				-.0364		.0687	
.953			-.0283				
.965	-.0556						

ARC11-716 IA14 O1+T12+S12N25+AT11 UPPER WING (RB1U40)

ALPHAO(3) = -.370 BETAO (1) = -8.090

SECTION (1)UPPER WING DEPENDENT VARIABLE CP

Y/BW	.2990	.3640	.4270	.5340	.6730	.7800	.8870
X/CW							
.000	.1118	.0085	.4571	.7524	.7300	.6806	.7304
.020				.4606	.4927	.4823	.4965
.025			.2879				
.040		.0445					
.045			.1810				
.050	.0489			.2251	.2611	.2576	.2608
.080				.0577			
.085			.0357				
.086		.0958					
.094	.0166						
.150				-.1606	-.1148	-.0443	-.001[illegible]
.163		.0000					
.177			-.0845				
.193		.0174					
.229	-.0081						
.250				-.2958	-.2643	-.2274	-.1969
.274			-.2059				
.339		-.1625					
.352	.0316						
.400				-.4009	-.3949		-.3706
.402			-.3093				
.497	.0000						
.550				-.4270	-.4388		
.555			.0000				
.600							-.3862
.650						-.4283	
.700	-.2334				-.1676		
.725				-.3567			
.750						-.4611	-.3923
.760			-.1075				
.775				-.1944	-.4229		
.808			-.0324				
.834	-.0156						
.850				-.1304	-.291[illegible]	-.4142	
.857			.0189				
.865	.1027						
.900	.1194			-.1066			-.3173
.905			.0622		-.2139		
.950				-.0677		-.2834	
.953			.0795				
.965	.0628						

DATE 10 JAN 75 TABULATED PRESSURE DATA - IA14A - VOL. 6 (RB1U40)

ARC11-716 IA14 O1+T12+S12N25+AT11 UPPER WING

ALPHAO(3) = -.380 BETAO (2) = -4.020

SECTION (1)UPPER WING DEPENDENT VARIABLE CP

Y/BW	.2990	.3640	.4270	.5340	.6730	.7800	.8870
X/CW							
.000	.0212	-.0653	.3747	.6662	.6408	.5901	.6346
.020				.4258	.4445	.4325	.4441
.025			.2487				
.040		-.0058					
.045			.1591				
.050	-.0541			.2076	.2300	.2242	.2269
.080				.0513			
.085			.0332				
.086		.0572					
.094	-.0564						
.150				-.1507	-.1264	-.0645	-.0232
.163		.0000					
.177			-.0785				
.193		.0125					
.229	-.0412						
.250				-.2682	-.2643	-.2419	-.2141
.274			-.2021				
.339		-.1707					
.362	.0077						
.400				-.3604	-.3936		-.3864
.402			-.3152				
.497	.0000						
.550				-.3928	-.4325		
.565			.0000				
.600							-.3990
.650						-.4584	
.700	-.2463				-.1617		
.725				-.2343			
.750						-.4592	-.4223
.760			-.1009				
.775				-.1388	-.3810		
.808			-.0157				
.834	-.0071						
.850				-.1097	-.2540	-.4142	
.857			.0313				
.865	.0953						
.900	.0963			-.0637			-.3242
.905			.0577		-.2244		
.950				-.0107		-.2264	
.953			.0584				
.965	.0272						

ARC11-715 IA14 O1+T12+S12N25<AT11 UPPER WING (RB1U40)

ALPHAO(3) = -.380 BETAO (3) = .020

SECTION (1)UPPER WING DEPENDENT VARIABLE CP

X/CW \ Y/BW	.2990	.3640	.4270	.5340	.6730	.7800	.8870
.000	-.0941	-.0974	.3086	.5738	.5420	.5057	.5438
.020				.3778	.3860	.3738	.3721
.025			.2052				
.040		-.0332					
.045			.1326				
.050	-.1224			.1805	.1870	.1856	.1765
.080				.0361			
.085			.0294				
.086		.0286					
.094	-.1378						
.150				-.1400	-.1357	-.0862	-.0533
.163		.0000					
.177			-.0808				
.193		.0038					
.229	-.0521						
.250				-.2885	-.2595	-.2502	-.2319
.274			-.1927				
.339		-.1652					
.362	-.0008						
.400				-.3644	-.3843		-.3914
.402			-.2919				
.497	.0000						
.550				-.3942	-.4123		
.565			.0000				
.600							-.4060
.650						-.4495	
.700	-.2262				-.1499		
.725				-.1857			
.750						-.4303	-.4315
.760			-.0851				
.775				-.1306	-.2845		
.808			.0307				
.834	-.0026						
.850				-.0413	-.2108	-.3019	
.857			.0331				
.865	.0348						
.900	.0450			-.0054			-.3229
.905			.0308		-.1855		
.950				.0146		-.1972	
.953			.0170				
.965	-.0176						

ARC11-716 IA14 O1+T12+S12N25+AT11 UPPER WING (RB1U4D)

ALPHAO(3) = -.390 BETAO (4) = 4.090

SECTION (1)UPPER WING DEPENDENT VARIABLE CP

Y/BW	.2990	.3640	.4270	.5340	.6930	.7800	.8870
X/CW							
.000	-.1996	-.1475	.2483	.5088	.4522	.3955	.4454
.020				.2844	.2950	.2759	.2854
.025			.1411				
.040		-.0504					
.045			.0822				
.050	-.2069			.1230	.1182	.1075	.1099
.080				-.0002			
.085			.0066				
.086		-.0019					
.094	-.2053						
.150				-.1532	-.1703	-.1259	-.0922
.163		.0000					
.177			-.0902				
.193		.0168					
.229	-.0773						
.250				-.3012	-.2654	-.2603	-.2542
.274			-.1535				
.339		-.1320					
.362	.0162						
.400				-.3704	-.3553		[illegible]
.402			-.2613				
.497	.0000						
.550				-.4049	-.3674		
.565			.0000				
[illegible]							-.4138
.650						-.4178	
.700	-.1865				-.1549		
.725				-.1972			
.750						-.3848	-.4141
.760			-.0809				
.775				-.0738	-.2214		
.808			.0138				
.834	-.0187						
.850				-.0197	-.1522	-.2341	
.857			-.0012				
.865	.0157						
.900	.0035			-.0300			-.2667
.905			-.0107		-.0112		
.950				-.0411		-.1737	
.953			-.0240				
.965	-.0521						

DATE 10 JAN 75 TABULATED PRESSURE DATA - TA14A - VOL. 6 (P81U40)

ARC11-716 TA14 (D1+T12+S12N25+A)11 UPPER WING

ALPHA,(3) = -.392 BETA,(5) = 8.140

SECTION (1)UPPER WING DEPENDENT VARIABLE CP

X/CW \ Y/BW	.2980	.3640	.4270	.5340	.6730	.7800	.8870
.000	-.3878	-.1856	.0708	.3551	.3740	.3202	.3548
.020				.2038	.2530	.2440	.2559
.025			.0457				
.040		-.1263					
.045			.0336				
.050	-.3077			.0869	.0966	.0941	.0795
.080				-.0124			
.085			.0100				
.086		-.0462					
.094	-.2863						
.150				-.1278	-.1449	-.1202	-.0925
.163		.0000					
.177			-.0523				
.193		.0336					
.229	-.0762						
.250				-.2331	-.2289	-.2383	-.2151
.274			-.1223				
.339		-.1233					
.362	.0255						
.400				-.3160	-.3300		-.3611
.402			-.2423				
.497	.0000						
.550				-.3377	-.3497		
.555			.0000				
.600							-.4007
.650						-.3560	
.700	-.1742				-.1601		
.725				-.1456			
.750						-.3302	-.3725
.760			-.0790				
.775				-.0493	-.1270		
.808			-.0053				
.834	-.0300						
.850				-.0334	-.0356	-.1601	
.857			-.0307				
.865	-.0001						
.900	-.0234			-.0349			-.1817
.905			-.0335		.0547		
.950				-.0036		-.1048	
.953			-.0411				
.965	-.0669						

DATE 10 JAN 75 TABULATED PRESSURE DATA - IA14A - VOL. 6 (RB1U40)

ARC11-716 IA14 D1+T12+S12N25+AT11 UPPER WING

ALPHAD(4) = 4.080 BETAD (1) = -8.060

SECTION (1)UPPER WING DEPENDENT VARIABLE CP

X/CW \ Y/BW	.2990	.4640	.4270	.5340	.6720	.7800	.8870
.000	.1104	.0657	.5006	.8246	.8466	.7880	.8263
.020				.3370	.3840	.3240	.3157
.025			.2071				
.040		.0575					
.045			.0885				
.050	.0563			.1[illegible]5	.1263	.1032	.0777
.080				-.0657			
.085			-.0717				
.096		.0735					
.094	.0159						
.130				-.2819	-.2334	-.1862	-.1505
.163		.0000					
.177			-.1985				
.193		-.0506					
.229	-.0022						
.250				-.4330	-.3718	-.3355	-.3015
.274			-.2914				
.339		-.2323					
.362	.0133						
.400				-.4983	-.4861		-.4401
.402			-.3625				
.497	.0000						
.550				-.5310	-.5222		
.565			.0000				
.600							-.4468
.650						-.4924	
.700	-.2847				-.1930		
.725				-.4599			
.750						-.5055	-.4549
.760			-.1975				
.775				-.3511	-.5050		
.808			-.1517				
.834	-.1176						
.850				-.2339	-.4112	-.4693	
.857			-.1153				
.865	.0218						
.900	.0640			-.1928			-.4063
.905			-.0546		-.2678		
.950				-.1776		-.4043	
.953			-.0031				
.985	.0168						

ARC11-716 IA14 OI+T12+S12N25+AT11 UPPER WING (RB1040)

ALPHA(0 4) = 4.080 BETA(2) = -4.020

SECTION (1)UPPER WING DEPENDENT VARIABLE CP

X/BW	.2990	.3640	.4270	.5340	.6730	.7800	.8870
X/CW							
.000	.0150	-.0186	.4046	.7252	.7669	.7122	.7225
.020				.2805	.2460	.2824	.2549
.025			.1728				
.040		-.0170					
.045			.0616				
.050	-.0312			.0726	.0952	.0749	.0311
.080				-.0760			
.085			-.0733				
.086		.0069					
.094	-.0620						
.150				-.2827	-.2454	-.2000	-.1792
.163		.0000					
.177			-.1898				
.193		-.0608					
.229	-.0620						
.250				-.4003	-.3764	-.3465	-.3278
.274			-.2803				
.339		-.2210					
.362	-.3105						
.400				-.4857	-.4837		-.4551
.402			-.3673				
.497	.0000						
.550				-.5105	-.5161		
.565			.0000				
.600							-.4539
.650						-.4954	
.700	-.3036				-.1905		
.725				-.4259			
.750						-.5038	-.4657
.760			-.1758				
.775				-.2795	-.4827		
.808			-.1467				
.834	-.0822						
.850				-.2318	-.3566	-.4690	
.857			-.0953				
.865	.0403						
.900	.0636			-.2271			-.4165
.905			-.0343		-.2923		
.950				-.1978		-.2991	
.953			.0016				
.965	-.0050						

ARC11-716 IA14 D1+T12+S12N25+AT11 UPPER WING (RB1040)

ALPHAD(4) = 4.010 BETAD (3) = .030

SECTION (1)UPPER WING DEPENDENT VARIABLE CP

X/CW \ Y/BW	.2990	.3640	.4270	.5340	.6730	.7800	.8870
.000	-.0936	-.1701	.3283	.6610	.6536	.5950	.6163
.020				.2325	.2723	.2151	.1886
.025			.1185				
.040		-.1122					
.045			.0294				
.050	-.1274			.0409	.0491	.0249	-.0109
.080				-.1024			
.085			-.0903				
.085		-.0171					
.094	-.1230						
.150				-.2880	-.2622	-.2224	-.2018
.163		.0000					
.177			-.1857				
.193		-.0616					
.229	-.0897						
.250				-.3748	-.3810	-.3614	-.3422
.274			-.2824				
.339		-.2257					
.362	.0206						
.400				-.4549	-.4793		-.4660
.402			-.3629				
.497	.0000						
.550				-.4634	-.5051		
.565			.0000				
.600							-.4663
.650						-.5017	
.700	-.2860				-.1765		
.725				-.2451			
.750						-.5224	-.4658
.760			-.1595				
.775				-.2265	-.3906		
.808			-.0928				
.834	-.0216						
.850				-.2162	-.3247	-.3607	
.857			-.0478				
.865	.0398						
.900	.0353			-.1615			-.4273
.905			-.0156		-.2944		
.950				-.0940		-.2850	
.953			-.0096				
.965	-.0374						

ARC11-716 IA14 Q1+T12+S12N25+AT11 UPPER WING (RB1U40)

ALPHA(41) = 4.040 BETA(41) = 4.090

SECTION 11 UPPER WING DEPENDENT VARIABLE CP

X/CW \ Y/BW	.2990	.3640	.4270	.5340	.6730	.7800	.8870
.000	-.2247	-.3548	.1951	.5353	.5365	.4957	.5338
.020				.1117	.1652	.1326	.1229
.025			.0315				
.040		-.1141					
.045			-.0370				
.050	-.2134			-.0347	-.0319	-.0397	-.0681
.080				-.1506			
.085			-.1186				
.086		-.0390					
.094	-.2062						
.150				-.2919	-.2961	-.2608	-.2413
.163		.0000					
.177			-.1842				
.193		-.0468					
.229	-.0900						
.250				-.3983	-.3968	-.3815	-.3697
.274			-.2478				
.339		-.2003					
.362	-.0092						
.400				-.4472	-.4722		-.4833
.402			-.3302				
.497	.0000						
.550				-.4571	-.4753		
.565			.0000				
.600							-.4796
.650						-.4979	
.700	-.2682				-.1790		
.725				-.2519			
.750						-.5069	-.4887
.770			-.1455				
.775				-.2048	-.2966		
.808			-.0601				
.834	-.0295						
.850				-.1470	-.2405	-.3376	
.857			-.0453				
.865	-.0075						
.900	-.0200			-.1084			-.3946
.905			-.0438		-.2089		
.950				-.0842		-.2671	
.953			-.0574				
.965	-.0867						

ARC11-716 IA14 O1+T12+S12N25+AT11 UPPER WING (RB1U40)

ALPHAO(4) = 4.060 BETAO (5) = 8.160

SECTION (11)UPPER WING DEPENDENT VARIABLE CP

X/CW \ Y/BW	.2990	.3640	.4270	.5340	.6730	.7800	.8870
.000	-.4271	-.2792	-.0162	.2338	.4064	.4170	.4966
.020				-.0230	.1079	.0860	.1030
.025			-.0401				
.040		-.1779					
.045			-.0617				
.050	-.3742			-.1055	-.0574	-.0730	-.0770
.080				-.1760			
.085			-.0869				
.086		-.1779					
.094	-.3078						
.150				-.2535	-.2846	-.2698	-.2297
.165		.0000					
.177			-.1465				
.193		-.0207					
.229	-.0756						
.250				-.2952	-.3668	-.3007	-.3549
.274			-.1933				
.339		-.1590					
.362	.0122						
.400				-.3529	-.4218		-.4677
.402			-.2862				
.497	.0000						
.550				-.3600	-.4303		
.565			.0000				
.600							-.4589
.650						-.4639	
.700	-.2610				-.1880		
.725				-.1752			
.750						-.4111	-.4584
.760			-.1362				
.775				-.1022	-.2200		
.808			-.0690				
.834	-.0550						
.850				-.0666	-.1579	-.2615	
.857			-.0827				
.865	-.0324						
.900	-.0535			-.0696			-.2990
.905			-.0728		-.0649		
.950				-.0679		-.2190	
.953			-.0779				
.965	-.1183						

ARC11-716 IA14 D1+T12+S12N25+AT11 UPPER WING (RB1U40)

ALPHA(5) = 8.000 BETA (1) = -8.060

SECTION (1)UPPER WING DEPENDENT VARIABLE CP

X/C	.2930	.3640	.4270	.640	.6730	.7800	.8870
Y/C							
.000	.1120	.0792	.6127	.8990	.8525	.7887	.7671
.020				.2210	.2282	.1357	.0734
.025			.2122				
.030		.0348					
.045			.0701				
.050	.0455			.0022	-.0208	-.0679	-.1411
.080				-.1591			
.085			-.1101				
.086		.0539					
.094	.0246						
.150				-.3666	-.3336	-.3140	-.3090
.153		.0000					
.177			-.2900				
.193		-.0895					
.222	-.0119						
.250				-.4891	-.4540	-.4347	-.4131
.274			-.3648				
.339		-.2948					
.362	-.0062						
.400				-.5667	-.5476		-.5157
.402			-.4655				
.497	.0000						
.550				-.5634	-.5357		
.555			.0000				
.600							-.5098
.650						-.5104	
.700	-.3403				-.2231		
.725				-.5348			
.750						-.4806	-.5076
.760			-.2668				
.775				-.5090	-.4741		
.808			-.2353				
.834	-.2571						
.850				-.4363	-.4613	-.4688	
.877			-.2130				
.855	-.1290						
.900	-.0049			-.3896			-.4631
.905			-.1871		-.4170		
.950				-.3391		-.4201	
.953			-.1381				
.965	-.0124						

DATE 10 JAN 75 TABULATED PRESSURE DATA - IA14A - VOL. 6

ARC11-716 IA14 O1+T12+S12N25+AT11 UPPER WING (RB1U40)

ALPHAO(5) = 7.960 BETAO (2) = -4.010

SECTION (1)UPPER WING DEPENDENT VARIABLE CP

Y/BW	.2990	.3640	.4270	.5340	.6730	.7800	.8870
X/CW							
.000	.0121	-.0457	.4353	8157	.7713	.7113	.6933
.020				.1621	.1872	.0993	.0280
.025			.0907				
.040		-.0685					
.045			-.0298				
.050	-.0344			-.0436	-.0538	-.0959	-.1727
.080				-.1932			
.085			-.1723				
.086		-.0241					
.094	-.0543						
.150				-.3936	-.3519	-.3341	-.3293
.165		.0000					
.177			-.3249				
.193		-.1605					
.229	-.0765						
.250				-.5403	-.4675	-.4492	-.4307
.274			-.3780				
.339		-.3037					
.362	-.0681						
.400				-.6060	-.5576		-.5281
.402			-.4421				
.497	.0000						
.550				-.6215	-.5538		
.565			.0000				
.600							-.5192
.650						-.5233	
.700	-.3481				-.2204		
.725				-.5430			
.750						-.4893	-.5189
.760			-.2443				
.775				-.5235	-.4917		
.808			-.2410				
.834	-.1609						
.850				-.3359	-.4726	-.4696	
.857			-.2085				
.865	-.0598						
.900	.0125			-.2601			-.4752
.905			-.1453		-.4140		
.950				-.2198		-.4091	
.953			-.0781				
.965	-.0369						

ARDL 7.0 TA14 D1+T12+S12N25+AT11 UPPER WING (RB1U40)

ALPHAD(5) = 7.910 BETAD (3) = .030

SECTION (1)UPPER WING DEPENDENT VARIABLE CP

Y/SW	.2990	.3540	.4270	.5340	.6730	.7800	.8870
X/CW							
.000	-.0727	-.2161	.2920	.6774	.6757	.5185	.6148
.020				.0598	.1262	.0474	-.0055
.025			-.0379				
.040		-.1630					
.055			-.1071				
.060	-.1350			-.1090	-.0994	-.1341	-.1949
.080				-.2325			
.095			-.2112				
.086		-.1025					
.094	-.1277						
.150				-.3995	-.3698	-.3536	-.3429
.163		.0000					
.177			-.3014				
.193		-.1511					
.229	-.1300						
.250				-.4953	-.4750	-.4600	-.4416
.274			-.3402				
.339		-.2814					
.362	-.0689						
.400				-.5370	-.5560		-.5329
.402			-.4184				
.497	.0000						
.550				-.5463	-.5606		
.565			.0000				
.600							-.5257
.650						-.5317	
.700	-.3373				-.2059		
.725				-.3468			
.750						-.4927	-.5250
.760			-.2339				
.775				-.2787	-.4934		
.808			-.2069				
.834	-.0817						
.850				-.2316	-.4665	-.4600	
.857			-.1436				
.865	-.0223						
.900	.0014			-.2105			-.4670
.905			-.0826		-.4184		
.950				-.1896		-.3923	
.953			-.0511				
.965	-.0621						

DATE 10 JAN 75 TABULATED PRESSURE DATA - IA14A - VOL. 6 (RB1U40)

ARC11-716 IA14 O1+T12+S12N29+AT11 UPPER WING

ALPHAO(5) = 8.000 BETAO (4) = 8.210

SECTION (1)UPPER WING DEPENDENT VARIABLE CP

Y/BW	.2990	.3640	.4270	.5340	.6730	.7800	.8870
X/CW							
.000	-.4007	-.2793	-.1031	.1070	.4080	.4303	.5120
.020				-.2185	-.0362	-.0567	-.0490
.025			-.1214				
.040		-.2217					
.045			-.1320				
.050	-.3702			-.2597	-.2167	-.2077	-.2231
.080				-.3030			
.085			-.1518				
.086		-.1938					
.094	-.3140						
.150				-.3434	-.4108	-.3901	-.3552
.163		.0000					
.177			-.2044				
.193		-.1468					
.229	-.1390						
.250				-.4710	-.4806	-.4705	-.4503
.274			-.2497				
.339		-.2155					
.362	-.0204						
.400				-.5067	-.5210		-.5397
.402			-.3274				
.497	.0000						
.550				-.5050	-.4952		
.565			.0000				
.600							-.5296
.650						-.5353	
.700	-.3012				-.2099		
.725				-.3016			
.750						-.4989	-.5045
.760			-.1760				
.775				-.2438	-.2749		
.808			-.1290				
.834	-.0992						
.850				-.2073	-.2337	-.4230	
.857			-.1320				
.865	-.0806						
.900	-.0947			-.2059			-.3914
.905			-.1257		-.1399		
.950				-.2062		-.3222	
.953			-.1283				
.965	-.1278						

ARC11-716 IA14 O1+T12+S12N25 UPPER WING (RB1U41) (15 FEB 74)

REFERENCE DATA

SREF = 2.4210 SQ.FT. XMRP = 29.5300 INCHES
LREF = 38.7090 INCHES YMRP = .0000 INCHES
BREF = 38.7090 INCHES ZMRP = .0000 INCHES
SCALE = .0300 SCALE

PARAMETRIC DATA

MACH = .600 ELEVON = .000
RUDDER = .000 SPOBRK = .000

ALPHA(1) = -7.940 BETA(1) = .020

SECTION (1)UPPER WING DEPENDENT VARIABLE CP

X/CW \ Y/BW	.2990	.3640	.4270	.5340	.6730	.7800	.8870
.000	-.0304	-.0909	.0277	-.2137	-.4520	-.6075	-.4137
.020				.4334	.3879	.4002	.3530
.025			.2941				
.040		.0772					
.045			.2690				
.050	.0062			.2867	.2999	.2995	.2447
.080				.1563			
.085			.1851				
.086		.1792					
.094	.0186						
.150				-.0529	-.0278	-.0047	-.0403
.163		.0000					
.177			-.0030				
.193		.1201					
.229	.0963						
.250				-.1760	-.1903	-.2020	-.2367
.274			-.1089				
.339		-.0967					
.362	.0901						
.400				-.1774	-.2174		-.2489
.402			-.1[illegible]98				
.497	.0000						
.550				-.1351	-.1693		
.565			.0000				
.600							-.1663
.650						-.1462	
.700	-.0340				-.1350		
.725				-.0753			
.750						.0372	.0034
.760			-.0086				
.775				.0364	.0384		
.808			.0341				
.834	-.0411						
.850				.0425	.0653	.0791	
.857			.0213				
.865	.0324						
.900	.0175			.0571			.0541
.905			.0269		.0752		

DATE 10 JAN 75 TABULATED PRESSURE DATA - IA14A - VOL. 6

ARC11-716 IA14 O1+T12+S12N25 UPPER WING (RB1U41)

ALPHAO(1) = -7.940 BETAO (1) = .020

SECTION (1)UPPER WING DEPENDENT VARIABLE CP

Y/BW	.2990	.3640	.4270	.5340	.6730	.7800	.8870
X/CW							
.950				.0524		.0845	
.953			.0112				
.965	-.0290						

ALPHAO(1) = -7.950 BETAO (2) = 4.080

SECTION (1)UPPER WING DEPENDENT VARIABLE CP

Y/BW	.2990	.3640	.4270	.5340	.6730	.7800	.8870
X/CW							
.000	-.0478	-.0768	-.0042	-.3217	-.5768	-.7164	-.5596
.020				.3874	.3259	.3296	.2752
.025			.2507				
.040		.0477					
.045			.2386				
.050	-.0192			.2639	.2671	.2594	.1993
.080				.1516			
.085			.1742				
.086		.1490					
.094	-.0035						
.150				-.0467	-.0293	-.0116	-.0545
.163		.0000					
.177			.0131				
.193		.1160					
.229	.0797						
.250				-.1739	-.1855	-.1975	-.2319
.274			-.0983				
.339		-.1001					
.362	.0927						
.400				-.1901	-.2290		-.2545
.402			-.1877				
.497	.0000						
.550				-.1571	-.1873		
.565			.0000				
.600							-.1966
.650						-.1611	
.700	-.0753				-.1476		
.725				-.1029			
.750						.0227	-.0088
.760			-.1186				
.775				.0104	.0207		
.808			.0069				
.834	-.0730						
.850				.0216	.0471	.0665	

ARC11-716 IA14 01+T12+S12N25 UPPER WING (RB1U41)

ALPHAO(1) = -7.950 BETAO (2) = 4.080

SECTION (1)UPPER WING DEPENDENT VARIABLE CP

X/CW \ Y/BW	.2990	.3640	.4270	.5340	.6730	.7800	.8870
.857			-.0001				
.865	.0056						
.900	-.0032			.0404			.0525
.905			.0135		.0674		
.950				.0425		.0747	
.953			.0111				
.955	-.0435						

ALPHAO(1) = -7.970 BETAO (3) = 8.150

SECTION (1)UPPER WING DEPENDENT VARIABLE CP

X/CW \ Y/BW	.2990	.3640	.4270	.5340	.6730	.7800	.8870
.000	-.0655	-.0644	.0025	-.3579	-.6749	-.8321	-.6690
.020				.3386	.2645	.2617	.2000
.025			.2132				
.040		.0343					
.045			.2073				
.050	-.0409			.2357	.2318	.2216	.1670
.080				.1398			
.085			.1677				
.086		.1215					
.094	-.0191						
.150				-.0442	-.0341	-.0137	-.0641
.153		.0000					
.177			-.0004				
.193		.1023					
.229	.0603						
.250				-.1739	-.1834	-.1870	-.2332
.274			-.1098				
.339		-.1128					
.342	.0741						
.400				-.2070	-.2318		-.2502
.402			-.2061				
.497	.0000						
.550				-.1801	-.1946		
.565			.0000				
.651							-.2024
.650						-.1652	
.700	-.1167				-.1615		
.725				-.1205			
.750						.0114	-.0120
.760			-.1438				

ALPHAO(1) = -7.970 BETAO (3) = 8.150

SECTION (1)UPPER WING DEPENDENT VARIABLE CP

Y/BW	.2990	.3640	.4270	.5340	.6730	.7800	.8870
X/CW							
.775				-.0090	.0049		
.808			-.0126				
.834	-.0893						
.850				.0061	.0344	.0556	
.857			-.0118				
.865	-.0135						
.900	-.0155			.0309			.0551
.905			-.0074		.0560		
.950				.0247		.0621	
.953			-.0171				
.965	-.0506						

ALPHAO(2) = -4.050 BETAO (1) = -8.030

SECTION (1)UPPER WING DEPENDENT VARIABLE CP

Y/BW	.2990	.3640	.4270	.5340	.6730	.7800	.8870
X/CW							
.000	.0560	.0948	.3543	.3903	.3204	.2086	.2572
.020				.3127	.3052	.3338	.3416
.025			.2656				
.040		.1748					
.045			.1519				
.050	.0349			.0441	.0481	.0683	.0505
.080				-.1276			
.085			-.0268				
.086		.1854					
.094	.0419						
.150				-.3112	-.3023	-.2958	-.2671
.163		.0000					
.177			-.2171				
.193		-.0281					
.229	.0805						
.250				-.3575	-.4149	-.4498	-.4593
.274			-.2581				
.339		-.2410					
.362	-.0145						
.400				-.2455	-.3140		-.3542
.402			-.2315				
.497	.0000						
.550				-.1277	-.1894		
.565			.0000				
.600							-.2178
.650						-.1467	

ARC11-716 IA14 01+T12+S12N25 UPPER WING (RB1U41)

ALPHAO(2) = -4.050 BETAO (1) = -8.030

SECTION (1)UPPER WING DEPENDENT VARIABLE CP

X/CW \ Y/BW	.2990	.3640	.4270	.5340	.6730	.7800	.8870
.700	.0074				-.1391		
.725				-.0370			
.750						.0471	.0023
.750			-.0404				
.775				.0765	.0604		
.808			.0792				
.834	.0192						
.850				.0732	.0873	.0963	
.857			.0650				
.865	.0970						
.900	.0681			.0844			.0873
.905			.0609		.0960		
.950				.0747		.1005	
.953			.0387				
.965	.0068						

ALPHAO(2) = -4.050 BETAO (2) = -4.020

SECTION (1)UPPER WING DEPENDENT VARIABLE CP

X/CW \ Y/BW	.2990	.3640	.4270	.5340	.6730	.7800	.8870
.000	.0101	.0489	.2679	.2713	.1692	.0469	.1029
.020				.3270	.3115	.3260	.3258
.025			.2544				
.040		.1412					
.045			.1685				
.050	.0051			.0810	.0801	.0963	.0700
.080				-.0836			
.085			.0118				
.086		.1700					
.094	.0101						
.150				-.2704	-.2636	-.2508	-.2388
.163		.0000					
.177			-.1848				
.193		-.0087					
.229	.0648						
.250				-.3440	-.3847	-.4072	-.4322
.274			-.2504				
.339		-.2272					
.362	-.0094						
.400				-.2529	-.3153		-.3319
.402			-.2501				
.497	.0000						

ARC11-716 IA14 O1+T12+S12N25 UPPER WING (RB1U41)

ALPHAO(2) = -4.050 BETAO (2) = -4.020

SECTION (1)UPPER WING DEPENDENT VARIABLE CP

X/CW \ Y/BW	.2990	.3640	.4270	.5340	.6730	.7800	.8870
.550				-.1594	-.2016		
.565			.0000				
.600							-.2139
.650						-.1561	
.700	-.0338				-.1348		
.725				-.0660			
.750						.0381	-.0028
.760			-.0714				
.775				.0493	.0436		
.808			.0515				
.834	-.0170						
.850				.0540	.0751	.0866	
.857			.0413				
.865	.0554						
.900	.0362			.0738			.0854
.905			.0457		.0896		
.950				.0685		.0916	
.953			.0307				
.965	-.0102						

ALPHAO(2) = -4.050 BETAO (3) = .030

SECTION (1)UPPER WING DEPENDENT VARIABLE CP

X/CW \ Y/BW	.2990	.3640	.4270	.5340	.6730	.7800	.8870
.000	-.0244	.0182	.1956	.1563	.0194	-.1152	-.0456
.020				.3201	.2873	.3065	.2943
.025			.2396				
.040		.1066					
.045			.1679				
.050	-.0284			.1045	.1185	.1176	.0746
.080				-.0422			
.085			.0359				
.086		.1459					
.094	-.0151						
.150				-.2559	-.2265	-.2063	-.2169
.163		.0000					
.177			-.1566				
.193		.0043					
.229	.0505						
.250				-.3254	-.3531	-.3746	-.4020
.274			-.2299				
.339		-.2122					

ARC11-716 IA14 O1+T12+S12N25 UPPER WING (RB1U41)

ALPHAO(2) = -4.050 BETAO (3) = .030

SECTION (1)UPPER WING DEPENDENT VARIABLE CP

X/CW \ Y/BW	.2990	.3640	.4270	.5340	.6730	.7800	.8870
.362	.0020						
.400				-.2654	-.3141		-.3279
.402			-.2603				
.497	.0000						
.550				-.1771	-.2180		
.565			.0000				
.600							-.2143
.650						-.1695	
.700	-.0728				-.1359		
.725				-.0923			
.750						.0224	-.0094
.760			-.0991				
.775				.0230	.0241		
.808			.0196				
.834	-.0519						
.850				.0339	.0549	.0701	
.857			.0149				
.865	.0211						
.900	.0084			.0555			.0764
.905			.0243		.0785		
.950				.0573		.0804	
.953			.0199				
.965	-.0251						

ALPHAO(2) = -3.950 BETAO (4) = 4.070

SECTION (1)UPPER WING DEPENDENT VARIABLE CP

X/CW \ Y/BW	.2990	.3640	.4270	.5340	.6730	.7800	.8870
.000	-.0634	.0032	.1520	.0817	-.0634	-.2149	-.1314
.020				.2889	.2400	.2658	.2418
.025			.2000				
.040		.0742					
.045			.1508				
.050	-.0493			.0944	.0978	.0973	.0499
.080				-.0364			
.085			.0303				
.086		.1160					
.094	-.0330						
.150				-.2226	-.2138	-.2028	-.2184
.163		.0000					
.177			-.1485				
.193		.0075					

ALPHAO(2) = -3.950 BETAO (4) = 4.070

SECTION (1)UPPER WING DEPENDENT VARIABLE CP

X/CW \ Y/BW	.2990	.3640	.4270	.5340	.6730	.7800	.8870
.229	.0356						
.250				-.3167	-.3492	-.3666	-.3850
.274			-.2286				
.339		-.2068					
.362	-.0008						
.400				-.2870	-.3255		-.3355
.402			-.2811				
.497	.0000						
.550				-.2089	-.2378		
.565			.0000				
.600							-.2184
.650						-.1826	
.700	-.1144				-.1535		
.725				-.1143			
.750						.0065	-.0208
.760			-.1308				
.775				-.0056	.0051		
.808			-.0103				
.834	-.0898						
.850				.0115	.0434	.0588	
.857			-.0120				
.865	-.0171						
.900	-.0221			.0330			.0687
.905			.0001		.0720		
.950				.0359		.0741	
.953			-.0049				
.965	-.0520						

ALPHAO(2) = -3.950 BETAO (5) = 8.110

SECTION (1)UPPER WING DEPENDENT VARIABLE CP

X/CW \ Y/BW	.2990	.3640	.4270	.5340	.6730	.7800	.8870
.000	-.1133	-.0304	.0955	.0268	-.1702	-.3316	-.2452
.020				.2576	.2066	.2332	.1933
.025			.1744				
.040		.0218					
.045			.1261				
.050	-.0771			.0841	.0918	.0822	.0475
.080				-.0330			
.085			.0273				
.088		.0977					
.094	-.0344						

ARC11-716 IA14 D1+T12+S12N25 UPPER WING (RB1U41)

ALPHAO(2) = -3.950 BETAO (5) = 8.110

SECTION (1)UPPER WING DEPENDENT VARIABLE CP

Y/BW	.2990	.3640	.4270	.5340	.6730	.7800	.8870
X/CW							
.150				-.2062	-.2037	-.1874	-.2063
.163		.0000					
.177			-.1277				
.193		.0070					
.229	.0233						
.250				-.3073	-.3322	-.3417	-.3557
.274			-.2226				
.339		-.2036					
.362	-.0004						
.400				-.2907	-.3243		-.3271
.402			-.2884				
.497	.0000						
.550				-.2286	-.2480		
.565			.0000				
.600							-.2226
.650						-.1915	
.700	-.1497				-.1614		
.725				-.1357			
.750						-.0022	-.0229
.760			-.1497				
.775				-.0315	-.0123		
.808			-.0293				
.834	-.1050						
.850				-.0049	.0264	.0486	
.857			-.0305				
.865	-.0395						
.900	-.0384			.0176			.0639
.905			-.0174		.0608		
.950				.0200		.0689	
.953			-.0174				
.965	-.0594						

ALPHAO(3) = -.310 BETAO (1) = -9.040

SECTION (1)UPPER WING DEPENDENT VARIABLE CP

Y/BW	.2990	.3640	.4270	.5340	.6730	.7800	.8870
X/CW							
.000	.0421	.0989	.3791	.5364	.5219	.4806	.5053
.020				.0726	.0373	.0271	.0156
.025			.0958				
.040		.1278					
.045			-.0302				
.050	-.0140			-.2172	-.2471	-.2635	-.2985

ARC11-716 IA14 O1+T12+S12N25 UPPER WING (RB1U41)

ALPHAO(3) = -.310 BETAO (1) = -8.040

SECTION (1)UPPER WING DEPENDENT VARIABLE CP

Y/BW	.2990	.3640	.4270	.5340	.6730	.7800	.8870
X/CW							
.080				-.3845			
.085			-.2221				
.086		.1080					
.094	-.0086						
.150				-.5214	-.5575	-.5538	-.5145
.163		.0000					
.177			-.3821				
.193		-.1604					
.229	.0342						
.250				-.5071	-.5932	-.6432	-.6651
.274			-.3874				
.339		-.3470					
.362	-.1044						
.400				-.3104	-.3949		-.4985
.402			-.2953				
.497	.0000						
.550				-.1504	-.2225		
.565			.0000				
.600							-.2515
.650						-.1635	
.700	-.0201				-.1364		
.725				-.0384			
.750						.0409	-.0160
.760			-.0308				
.775				.0785	.0601		
.808			.0787				
.834	.0156						
.850				.0794	.0882	.0991	
.857			.0671				
.865	.0931						
.900	.0749			.0894			.0893
.905			.0668		.1073		
.950				.0853		.1065	
.953			.0490				
.965	.0197						

ARC11-716 IA14 O1+T12+S12N25 UPPER WING (RB1U41)

ALPHAO(3) = -.320 BETAO (2) = -4.020

SECTION (1)UPPER WING DEPENDENT VARIABLE CP

Y/BW	.2990	.3640	.4270	.5340	.6730	.7800	.8870
X/CW							
.000	-.0089	.0652	.3332	.4564	.4302	.3807	.4220
.020				.1165	.0721	.0659	.0525
.025			.1292				
.040		.1116					
.045			.0058				
.050	-.0389			-.1542	-.1891	-.2013	-.2492
.080				-.3245			
.085			-.1645				
.086		.1016					
.094	-.0259						
.150				-.4721	-.4988	-.4974	-.4703
.163		.0000					
.177			-.3479				
.193		-.1347					
.229	.0210						
.250				-.4820	-.5580	-.6033	-.6179
.274			-.3702				
.339		-.3342					
.362	-.0902						
.400				-.3301	-.3984		-.4605
.402			-.3197				
.497	.0005						
.550				-.1849	-.2390		
.565			.0000				
.600							-.2472
.650						-.1729	
.700	-.0577				-.1354		
.725				-.0686			
.750						.0281	-.0151
.760			-.0716				
.775				.0460	.0348		
.808			.0478				
.834	-.0179						
.850				.0575	.0753	.0844	
.857			.0448				
.865	.0578						
.900	.0416			.0731			.0873
.905			.0504		.0957		
.950				.0745		.1020	
.953			.0392				
.965	.0030						

DATE 10 JAN 75 TABULATED PRESSURE DATA - IA14A - VOL. 6

ARC11-716 IA14 O1+T12+S12N25 UPPER WING (RB1U41)

ALPHAO(3) = -.320 BETAO (3) = .040

SECTION (1)UPPER WING DEPENDENT VARIABLE CP

Y/BW	.2990	.3640	.4270	.5340	.6730	.7800	.8870
X/CW							
.000	-.0535	.0289	.2848	.3790	.3344	.2811	.3254
.020				.1400	.0906	.0849	.0657
.025			.1209				
.040		.0900					
.045			.0259				
.050	-.0635			-.1123	-.1512	-.1650	-.2082
.080				-.2717			
.085			-.1336				
.086		.0909					
.094	-.0446						
.150				-.4208	-.4463	-.4457	-.4319
.160		.0000					
.177			-.2973				
.193		-.1094					
.229	.0118						
.250				-.4589	-.5101	-.5662	-.5766
.274			-.3490				
.339		-.3194					
.362	-.0819						
.400				-.3362	-.3962		-.4047
.402			-.3293				
.497	.0000						
.550				-.2106	-.2543		
.565			.0000				
.600							-.2380
.650						-.1852	
.700	-.1036				-.1387		
.725				-.0944			
.750						.0136	-.0158
.760			-.1025				
.775				.0233	.0177		
.800			.0171				
.834	-.0561						
.850				.0371	.0542	.0731	
.857			.0170				
.865	.0097						
.900	.0053			.0562			.0811
.905			.0250		.0814		
.950				.0574		.0896	
.953			.0220				
.965	-.0226						

ARC11-716 IA14 D1+T12+S12N25 UPPER WING (RB1U41)

ALPHAD(3) = -.330 BETAD (4) = 4.060

SECTION (1)UPPER WING DEPENDENT VARIABLE CP

Y/BW	.2990	.3640	.4270	.5340	.6730	.7800	.8870
X/CW							
.000	-.1110	-.0146	.2307	.3014	.2388	.1887	.2402
.020				.1323	.0751	.0710	.0451
.025			.1083				
.040		.0557					
.045			.0311				
.050	-.0855			-.0927	-.1256	-.1475	-.2034
.080				-.2300			
.085			-.1024				
.086		.0698					
.094	-.0641						
.150				-.3853	-.4030	-.4174	-.4179
.163		.0000					
.177			-.2703				
.193		-.0914					
.229	.0371						
.250				-.4412	-.4892	-.5242	-.5469
.274			-.3322				
.339		-.2981					
.362	-.0728						
.400				-.3513	-.4009		-.3860
.402			-.3407				
.497	.0001						
.550				-.2404	-.2680		
.565			.0000				
.600							-.2315
.650						-.1942	
.700	-.1381				-.1432		
.725				-.1208			
.750						.0078	-.0158
.760			-.1215				
.775				-.0061	.0012		
.800			-.0135				
.834	-.0898						
.850				.0128	.0438	.0652	
.857			-.0094				
.865	-.0275						
.900	-.0275			.0375			.0037
.905			-.0030		.0748		
.950				.0449		.0855	
.953			-.0009				
.965	-.0491						

ARC11-716 IA14 O1+T12+S12N25 UPPER WING (RB1U41)

ALPHAO(3) = -.330 BETAO (3) = 8.140

SECTION (1)UPPER WING DEPENDENT VARIABLE CP

Y/BW	.2990	.3640	.4270	.5340	.6730	.7800	.8870
X/CW							
.000	-.1923	-.0571	.0948	.2386	.1513	.0925	.1471
.020				.1315	.0715	.0815	.0458
.025			.0462				
.040		-.0184					
.045			.0020				
.050	-.1260			-.0703	-.0852	-.1100	-.1791
.080				-.2025			
.085			-.0946				
.086		.0098					
.094	-.1012						
.150				-.3509	-.3628	-.3615	-.3718
.163		.0000					
.177			-.2410				
.193		-.0703					
.229	-.0104						
.250				-.4152	-.4570	-.4787	-.4999
.274			-.3114				
.339		-.2856					
.362	-.0693						
.400				-.3513	-.3919		-.3735
.402			-.3379				
.497	.0000						
.550				-.2579	-.2745		
.555			.0000				
.600							-.2251
.650						-.1986	
.700	-.1787				-.1612		
.725				-.1396			
.750						-.0041	-.0163
.760			-.1453				
.775				-.0351	-.0177		
.800			-.0416				
.834	-.1135						
.850				-.0094	.0254	.0547	
.857			-.0381				
.865	-.0514						
.900	-.0491			.0157			.0815
.905			-.0161		.0647		
.950				.0208		.0756	
.953			-.0191				
.965	-.0582						

ARC11-716 IA14 O1+T12+S12N25 UPPER WING (RB1U41)

ALPHAO(4) = 4.130 BETAO (1) = -8.050

SECTION (1)UPPER WING DEPENDENT VARIABLE CP

Y/BW	.2990	.3640	.4270	.5340	.6730	.7800	.8870
X/CW							
.000	-.0027	.0189	.3339	.5454	.5081	.4365	.4053
.020				-.3131	-.4430	-.5769	-.6836
.025			-.1584				
.040		.0325					
.045			-.3121				
.050	-.0725			-.5975	-.7283	-.8151	-.9052
.080				-.7605			
.085			-.4938				
.086		-.0129					
.094	-.0568						
.150				-.7852	-.8977	-.9414	-.8801
.163		.0000					
.177			-.5976				
.193		-.3243					
.229	-.0185						
.250				-.6816	-.8238	-.9080	-.9524
.274			-.5198				
.339		-.4662					
.362	-.2079						
.400				-.3829	-.4837		-.5278
.402			-.3647				
.497	.0000						
.550				-.1742	-.2521		
.565			.0000				
.600							-.3127
.650						-.1809	
.700	-.0485				-.1372		
.725				-.0298			
.750						.0228	-.0629
.760			-.0124				
.775				.0827	.0554		
.808			.0768				
.834	.0287						
.850				.0898	.0906	.0890	
.857			.0761				
.865	.1058						
.900	.1023			.1037			.0585
.905			.0764		.1166		
.950				.100.		.1058	
.953			.0595				
.965	.0393						

ARC11-716 IA14 O1+T12+S12N25 UPPER WING (RB1U41)

ALPHAO(4) = 4.130 BETAO (2) = -4.010

SECTION (1)UPPER WING DEPENDENT VARIABLE CP

Y/BW	.2990	.3640	.4270	.5340	.6730	.7800	.8870
X/CW							
.000	-.0580	-.0063	.3076	.5099	.4774	.4057	.3787
.020				-.2330	-.3581	-.4690	-.5931
.025			-.1106				
.040		.0281					
.045			-.2480				
.050	-.0941			-.5027	-.6193	-.7190	-.8173
.080				-.6637			
.085			-.4310				
.086		-.0084					
.094	-.0785						
.150				-.7223	-.8165	-.8485	-.8082
.163		.0000					
.177			-.5394				
.193		-.2087					
.229	-.0326						
.250				-.6553	-.7717	-.8509	-.8805
.274			-.5052				
.339		-.4620					
.362	-.1917						
.400				-.3921	-.4820		-.5240
.402			-.3834				
.497	.0000						
.550				-.1982	-.2659		
.565			.0000				
.600							-.2992
.650						-.1859	
.700	-.0900				-.1318		
.725				-.0570			
.750						.0146	-.0477
.760			-.0539				
.775				.0543	.0382		
.800			.0496				
.834	-.0117						
.850				.0667	.0822	.0819	
.857			.0497				
.865	.0629						
.900	.0629			.0874			.0709
.905			.0524		.1102		
.950				.0880		.1069	
.953			.0479				
.965	.0210						

ARC11-716 IA14 O1+T12+S12N25 UPPER WING (RB1U41)

ALPHAO(4) = 4.130 BETAO (3) = .060

SECTION (1)UPPER WING DEPENDENT VARIABLE CP

X/CW \ Y/BW	.2990	.3640	.4270	.5340	.6730	.7800	.8870
.000	-.1136	-.0473	.2680	.4580	.4281	.3639	.3428
.020				-.1716	-.2917	-.4076	-.5046
.025			-.0780				
.040		.0153					
.045			-.1942				
.050	-.1127			-.4202	-.5414	-.6211	-.7222
.080				-.5680			
.085			-.3619				
.086		-.0023					
.094	-.0910						
.150				-.6497	-.7138	-.7597	-.7323
.163		.0000					
.177			-.4854				
.193		-.2512					
.229	-.0325						
.250				-.6187	-.7144	-.7867	-.8123
.274			-.4854				
.339		-.4372					
.362	-.1721						
.400				-.4021	-.4732		-.5025
.402			-.3966				
.497	.0000						
.550				-.2293	-.2785		
.565			.0000				
.600							-.2805
.650						-.1921	
.700	-.1293				-.1266		
.725				-.0804			
.750						.0149	-.0350
.760			-.0341				
.775				.0241	.0201		
.808			.0244				
.834	-.0531						
.850				.0492	.0663	.0782	
.857			.0242				
.865	.0179						
.900	.0223			.0684			.0785
.905			.0371		.0980		
.950				.0738		.1033	
.953			.0336				
.965	.0000						

ARC11-716 IA14 O1+T12+S12N25 UPPER WING (RB1U41)

ALPHAO(4) = 4.120 BETAO (4) = 4.080

SECTION (1)UPPER WING DEPENDENT VARIABLE CP

Y/BW	.2990	.3640	.4270	.5340	.6730	.7890	.8870
X/CW							
.000	-.1987	-.1287	.2021	.3944	.3680	.3089	.3046
.020				-.1338	-.2539	-.3456	-.4424
.025			-.0660				
.040		-.0144					
.045			-.1695				
.050	-.1406			-.3715	-.4804	-.5567	-.6602
.080				-.5031			
.085			-.3079				
.086		-.0149					
.094	-.1070						
.150				-.5998	-.6712	-.6955	-.6600
.163		.0000					
.177			-.4354				
.193		-.2217					
.229	-.0401						
.250				-.5876	-.6709	-.7339	-.7535
.274			-.4540				
.339		-.4046					
.362	-.1576						
.400				-.4216	-.4801		-.4895
.402			-.4103				
.497	.0000						
.550				-.2624	-.2920		
.565			.0000				
.600							-.2653
.650						-.1994	
.700	-.1630				-.1481		
.725				-.1068			
.750						.0011	-.0266
.760			-.1081				
.775				-.0030	.0063		
.808			-.0160				
.834	-.0904						
.850				.0221	.0538	.0707	
.857			-.0067				
.865	-.0280						
.900	-.0126			.0484			.0829
.908			.0046		.0899		
.950				.0552		.1013	
.953			.0090				
.965	-.0327						

ARC11-716 IA14 O1+T12+S12N25 UPPER WING (RB1U41)

ALPHAO(4) = 4.110 BETAO (5) = 8.150

SECTION (1)UPPER WING DEPENDENT VARIABLE CP

Y/BW	.2990	.3640	.4270	.5340	.6730	.7800	.8870
X/CW							
.000	-.3127	-.1559	.0440	.2958	.3112	.2656	.2735
.020				-.0728	-.1764	-.2459	-.3383
.025			-.0925				
.040		-.0683					
.045			-.1640				
.050	-.1895			-.2846	-.3833	-.4494	-.5682
.080				-.4124			
.085			-.2493				
.086		-.0642					
.094	-.1887						
.150				-.5160	-.5765	-.6242	-.6176
.163		.0000					
.177			-.3597				
.193		-.1930					
.229	-.0391						
.250				-.5354	-.6128	-.6558	-.6759
.274			-.4066				
.339		-.3734					
.362	-.1337						
.400				-.4068	-.4587		-.4566
.402			-.3870				
.497	.0000						
.500				-.2727	-.2969		
.565			.0000				
.600							-.2474
.650						-.2000	
.700	-.1922				-.1564		
.725				-.1300			
.750						.0024	-.0104
.760			-.1452				
.775				-.0399	-.0074		
.800			-.0518				
.834	-.1187						
.850				-.0047	.0421	.0682	
.857			-.0367				
.865	-.0608						
.900	-.0470			.0202			.0931
.905			-.0173		.0753		
.950				.0258		.0981	
.955			-.0117				
.965	-.0511						

ARC11-716 IA14 O1+T12+S12N25 UPPER WING (RB1U41)

ALPHAO(5) = 7.990 BETAO (1) = -8.000

SECTION (1)UPPER WING DEPENDENT VARIABLE CP

Y/BW	.2990	.3640	.4270	.5340	.6730	.7800	.8870
X/CW							
.000	-.0715	-.1033	.2378	.4497	.2978	.0971	-.0225
.020				-.7170	-1.0190	-1.3460	-1.6530
.025			-.4162				
.040		-.0843					
.045			-.5692				
.050	-.1327			-.9889	-1.2810	-1.5010	-1.6860
.080				-1.1460			
.085			-.7666				
.086		-.1357					
.094	-.1062						
.150				-1.0560	-1.2500	-1.3280	-1.2580
.163		.0000					
.177			-.7800				
.193		-.4748					
.229	-.0650						
.250				-.8163	-.9760	-1.1000	-1.2440
.274			-.6391				
.339		-.5733					
.362	-.2873						
.400				-.4298	-.5515		-.7202
.402			-.4045				
.497	.0000						
.550				-.1767	-.2695		
.565			.0000				
.600							-.4002
.650						-.2036	
.700	-.0735				-.1379		
.725				-.0167			
.750						-.0138	-.1603
.760			-.0151				
.775				.0835	.0467		
.808			.0643				
.834	.0356						
.850				.0920	.0840	.0575	
.857			.0606				
.865	.1059						
.900	.1044			.1014			-.0278
.905			.0674		.1108		
.950				.0979		.0851	
.953			.0600				
.965	.0906						

ARC11-716 IA14 O1+T12+S12N25 UPPER WING (RB1U41)

ALPHAD(5) = 8.000 BETAD (2) = -4.010

SECTION (1)UPPER WING DEPENDENT VARIABLE CP

X/CW \ Y/BW	.2990	.3640	.4270	.5340	.6730	.7800	.8870
.000	-.1280	-.1302	.2219	.4444	.3183	.1057	-.0267
.020				-.5983	-.8784	-1.1880	-1.4750
.025			-.3351				
.040		-.0738					
.045			-.4766				
.050	-.1550			-.8485	-1.1180	-1.3260	-1.5360
.080				-1.0060			
.085			-.6630				
.086		-.1111					
.0[illegible]	-.1242						
.150				-.9575	-1.1370	-1.2210	-1.1740
.163		.0000					
.177			-.7196				
.193		-.4253					
.229	-.0721						
.250				-.7843	-.9161	-1.0870	-1.1470
.274			-.6176				
.339		-.5503					
.362	-.2720						
.400				-.4498	-.5519		-.6675
.402			-.4344				
.497	.0000						
.550				-.2109	-.2858		
.565			.0000				
.600							-.3781
.650						-.2070	
.700	-.1128				-.1243		
.725				-.0448			
.750						-.0101	-.1153
.760			-.0424				
.775				.0550	.0368		
.808			.0467				
.834	-.0066						
.850				.0720	.0784	.0636	
.857			.0474				
.865	.0662						
.900	.0762			.0905			.0192
.905			.0571		.1055		
.950				.0937		.0929	
.953			.0566				
.965	.0338						

ARC11-716 IA14 O1+T12+S12N25 UPPER WING (RB1U41)

ALPHAO(5) = 8.000 BETAO (3) = .010

SECTION (1)UPPER WING DEPENDENT VARIABLE CP

Y/BW	.2990	.3640	.4270	.5340	.6730	.7800	.8870
X/CW							
.000	-.1959	-.1734	.1876	.4206	.3091	.1199	-.0128
.020				-.5038	-.7515	-1.0280	-1.3120
.025			-.2774				
.040		-.0735					
.045			-.4077				
.050	-.1739			-.7478	-.9665	-1.1820	-1.3930
.080				-.8750			
.085			-.5693				
.086		-.0958					
.094	-.1321						
.150				-.8685	-1.0360	-1.1150	-1.0810
.163		.0000					
.177			-.6430				
.193		-.3778					
.229	-.0680						
.250				-.7448	-.9105	-1.0190	-1.0590
.274			-.5896				
.339		-.5263					
.362	-.2509						
.400				-.4578	-.5474		-.6260
.402			-.4488				
.497	.0000						
.550				-.2426	-.3008		
.565			.0000				
.600							-.3540
.650						-.2104	
.700	-.1508				-.1193		
.725				-.0759			
.750						-.0065	-.0915
.760			-.0747				
.775				.0290	.0186		
.808			.0230				
.834	-.0448						
.850				.0508	.0675	.0624	
.857			.0340				
.865	.0280						
.900	.0418			.0699			.0404
.905			.0452		.0999		
.950				.0808		.0941	
.953			.0414				
.965	.0195						

DATE 10 JAN 75 TABULATED PRESSURE DATA - IA14A - VOL. 6

ARC11-716 IA14 O1+T12+S12N25 UPPER WING (RB1U41)

ALPHAO(5) = 7.870 BETAO (4) = 8.160

SECTION (1)UPPER WING DEPENDENT VARIABLE CP

X/CW \ Y/BW	.2990	.3640	.4270	.5340	.6730	.7800	.8870
.000	-.4370	-.2634	-.1152	.2356	.2941	.1666	.0583
.020				-.3383	-.4965	-.6994	-.9459
.025			-.2616				
.040		-.1315					
.045			-.3040				
.050	-.2557			-.5109	-.6837	-.8577	-1.0550
.080				-.6115			
.085			-.3616				
.086		-.1324					
.094	-.2673						
.150				-.6540	-.7868	-.8609	-.8653
.163		.0000					
.177			-.4446				
.193		-.2714					
.229	-.1034						
.250				-.6172	-.7442	-.8297	-.8729
.274			-.4463				
.339		-.4308					
.362	-.1855						
.400				-.4303	-.5126		-.5144
.422			-.4043				
.497	.0000						
.550				-.2738	-.3070		
.565			.0000				
.600							-.2907
.650						-.2054	
.700	-.1937				-.1598		
.725				-.1238			
.750						-.0066	-.0446
.760			-.1437				
.775				-.0450	-.0066		
.808			-.0666				
.834	-.1157						
.850				-.0149	.0394	.0632	
.857			-.0515				
.865	-.0610						
.900	-.0463			.0111			.0704
.905			-.0296		.0809		
.950				.0197		.0953	
.953			-.0131				
.965	-.0486						

ARC11-716 IA14 O1+T12+S12N25 UPPER WING (RB1U42) (16 FEB 74)

REFERENCE DATA

SREF = 2.4210 SQ.FT. XMRP = 29.5800 INCHES
LREF = 38.7090 INCHES YMRP = .0000 INCHES
BREF = 38.7090 INCHES ZMRP = .0000 INCHES
SCALE = .0300 SCALE

PARAMETRIC DATA

MACH = .750 ELEVON = .000
RUDDER = .000 SPOBRK = .000

ALPHAO(1) = -7.890 BETAO (1) = -8.000

SECTION (1)UPPER WING DEPENDENT VARIABLE CP

Y/BW	.2990	.3640	.4270	.5340	.6730	.7800	.8870
X/CW							
.000	.0319	.0219	.2112	.2041	.0809	-.0302	.0477
.020				.5025	.4852	.5013	.4683
.025			.3760				
.040		.1977					
.045			.3182				
.050	.0826			.2861	.3118	.3166	.2721
.080				.1234			
.085			.1773				
.086		.2606					
.094	.0885						
.150				-.1064	-.0754	-.0526	-.0760
.163		.0000					
.177			-.0402				
.193		.1283					
.229	.1459						
.250				-.2104	-.2503	-.2829	-.3283
.274			-.1367				
.339		-.1122					
.362	.1098						
.400				-.1599	-.2468		-.2909
.402			-.1492				
.497	.0000						
.550				-.0673	-.1609		
.565			.0000				
.600							-.1998
.655						-.1379	
.700	.0564				-.1480		
.725				-.0274			
.750						.0829	.0273
.760			-.0398				
.775				.1098	.0868		
.808			.1050				
.834	.0283						
.850				.0883	.1008	.1112	
.857			.0801				
.865	.1168						
.900	.0880			.0935			.0786
.905			.0682		.1130		

ARC11-716 IA14 O1+T12+S12N25 UPPER WING (RB1U42)

ALPHAO(1) = -7.890 BETAO (1) = -8.000

SECTION (1)UPPER WING DEPENDENT VARIABLE CP

Y/BW	.2990	.3640	.4270	.5340	.6730	.7800	.8870
X/CW							
.950				.0752		.1089	
.953			.0360				
.965	.0045						

ALPHAO(1) = -7.780 BETAO (2) = -3.990

SECTION (1)UPPER WING DEPENDENT VARIABLE CP

Y/BW	.2990	.3640	.4270	.5340	.6730	.7800	.8870
X/CW							
.000	-.0090	-.0356	.1217	.0803	-.0520	-.1977	-.1071
.020				.4806	.4430	.4584	.4138
.025			.3538				
.040		.1478					
.045			.3113				
.050	.0481			.2954	.3078	.3065	.2526
.080				.1437			
.085			.2008				
.086		.2291					
.094	.0550						
.150				-.0713	-.0566	-.0326	-.0677
.163		.0000					
.177			-.0133				
.193		.1370					
.229	.1231						
.250				-.1988	-.2302	-.2611	-.3043
.274			-.1188				
.339		-.1031					
.362	.1107						
.400				-.1786	-.2563		-.3061
.402			-.1675				
.497	.0000						
.550				-.1252	-.1855		
.565			.0000				
.600							-.2154
.650						-.1611	
.700	.0092				-.1488		
.725				-.0644			
.750						.0611	.0143
.760			-.0783				
.775				.0738	.0595		
.808			.0710				
.834	-.0149						
.850				.0590	.0797	.0951	

ARC11-716 IA14 O1+T12+S12N25 UPPER WING (RB1U42)

ALPHAO(1) = -7.780 BETAO (2) = -3.990

SECTION (1)UPPER WING DEPENDENT VARIABLE CP

Y/BW	.2990	.3640	.4270	.5340	.6730	.7800	.8870
X/CW							
.857			.0510				
.865	.0751						
.900	.0475			.0695			.0663
.905			.0425		.0918		
.950				.0578		.0937	
.953			.0170				
.965	-.0209						

ALPHAO(1) = -7.780 BETAO (3) = .040

SECTION (1)UPPER WING DEPENDENT VARIABLE CP

Y/BW	.2990	.3640	.4270	.5340	.6730	.7800	.8870
X/CW							
.000	-.0279	-.0511	.0624	-.0388	-.2012	-.3513	-.2561
.020				.4507	.3849	.3997	.3496
.025			.3167				
.040		.1049					
.045			.2876				
.050	.0136			.2905	.2889	.2801	.2195
.080				.1538			
.085			.2001				
.086		.1993					
.094	.0239						
.150				-.0561	-.0447	-.0288	-.0808
.163		.0000					
.177			.0110				
.193		.1420					
.229	.1048						
.250				-.1913	-.2209	-.2473	-.3032
.274			-.1089				
.339		-.0927					
.362	.1122						
.400				-.2046	-.2656		-.3163
.402			-.1887				
.497	.0000						
.550				-.1657	-.2108		
.565			.0000				
.600							-.2327
.650						-.1811	
.700	-.0439				-.1538		
.725				-.1013			
.750						.0380	-.0006
.760			-.1177				

ARC11-716 IA14 O1+T12+S12N25 UPPER WING (RB1U42)

ALPHAO(1) = -7.780 BETAO (3) = .040

SECTION (1)UPPER WING DEPENDENT VARIABLE CP

Y/BW	.2990	.3640	.4270	.5340	.6730	.7800	.8870
X/CW							
.775				.0355	.0352		
.808			.0344				
.834	-.0619						
.850				.0333	.0601	.0775	
.857			.0167				
.865	.0301						
.900	.0120			.0490			.0558
.905			.0195		.0766		
.950				.0417		.0827	
.953			.0004				
.965	-.0413						

ALPHAO(1) = -7.790 BETAO (4) = 4.090

SECTION (1)UPPER WING DEPENDENT VARIABLE CP

Y/BW	.2990	.3640	.4270	.5340	.6730	.7800	.8870
X/CW							
.000	-.0367	-.0331	.0248	-.1359	-.3293	-.4662	-.3551
.020				.4014	.3231	.3321	.2777
.025			.2742				
.040		.0795					
.045			.2584				
.050	-.0049			.2714	.2606	.2394	.1768
.080				.1526			
.085			.1878				
.086		.1710					
.094	.0083						
.150				-.0404	-.0463	-.0353	-.0996
.163		.0000					
.177			.0216				
.193		.1378					
.229	.0926						
.250				-.1917	-.2165	-.2384	-.2957
.274			-.1005				
.339		-.0883					
.362	.1127						
.400				-.2233	-.2724		-.3263
.402			-.2150				
.497	.0000						
.550				-.1968	-.2413		
.565			.0000				
.600							-.2410
.650						-.2058	

ALPHAO(1) = -7.790 BETAO (4) = 4.090

SECTION (1)UPPER WING DEPENDENT VARIABLE CP

Y/BW	.2990	.3640	.4270	.5340	.6730	.7800	.8870
X/CW							
.700	-.0972				-.1707		
.725				-.1350			
.750						.0146	-.0139
.760			-.1525				
.775				.0048	.0039		
.808			.0036				
.834	-.1018						
.850				.0151	.0408	.0571	
.857			-.0034				
.865	-.0061						
.900	-.0213			.0263			.0458
.905			.0035		.0591		
.950				.0169		.0772	
.953			-.0100				
.965	-.0572						

ALPHAO(1) = -7.970 BETAO (5) = 8.160

SECTION (1)UPPER WING DEPENDENT VARIABLE CP

Y/BW	.2990	.3640	.4270	.5340	.6730	.7800	.8870
X/CW							
.000	-.0638	-.0409	.0157	-.1989	-.4455	-.5849	-.4727
.020				.3591	.2641	.2656	.2023
.025			.2318				
.040		.0522					
.045			.2245				
.050	-.0307			.2508	.2243	.2061	.1357
.080				.1472			
.085			.1733				
.086		.1409					
.094	-.0164						
.150				-.0408	-.0433	-.0386	-.1120
.163		.0000					
.177			.0228				
.193		.1231					
.229	.0719						
.250				-.1854	-.2120	-.2332	-.2954
.2[illegible]4			-.1014				
.339		-.0923					
.362	.0936						
.400				-.2380	-.2885		-.3215
.402			-.2291				
.497	.0000						

ARC11-716 IA14 O1+T12+S12N25 UPPER WING (RB1U42)

ALPHAO(1) = -7.970 BETAO (5) = 8.160

SECTION (1)UPPER WING DEPENDENT VARIABLE CP

Y/BW	.2990	.3640	.4270	.5340	.6730	.7800	.8870
X/CW							
.550				-.2307	-.2560		
.565			.0000				
.600							-.2456
.650						-.2139	
.700	-.1493				-.1731		
.725				-.1552			
.750						.0042	-.0226
.760			-.1756				
.775				-.0190	-.0103		
.808			-.0244				
.834	-.1289						
.850				-.0076	.0268	.0505	
.857			-.0315				
.865	-.0380						
.900	-.0336			.0150			.0538
.905			-.0174		.0476		
.950				.0113		.0687	
.953			-.0269				
.965	-.0619						

ALPHAO(2) = -4.020 BETAO (1) = -8.060

SECTION (1)UPPER WING DEPENDENT VARIABLE CP

Y/BW	.2990	.3640	.4270	.5340	.6730	.7800	.8870
X/CW							
.000	.0561	.1139	.3698	.4414	.3811	.2890	.3240
.020				.3293	.3070	.3247	.3153
.025			.2743				
.040		.1961					
.045			.1658				
.050	.0404			.0635	.0495	.0618	.0238
.080				-.1338			
.085			-.0087				
.086		.2058					
.094	.0455						
.150				-.3379	-.3378	-.3266	-.3191
.163		.0000					
.177			-.2336				
.193		-.0085					
.229	.0951						
.250				-.4048	-.4720	-.5244	-.5525
.274			-.2989				
.339		-.2679					

ARC11-716 IA14 O1+T12+S12N25 UPPER WING (RB1U42)

ALPHAO(2) = -4.020 BETAO (1) = -8.060

SECTION (1)UPPER WING DEPENDENT VARIABLE CP

Y/BW	.2990	.3640	.4270	.5340	.6730	.7800	.8870
X/CW							
.362	.0040						
.400				-.2707	-.3605		-.3967
.402			-.2620				
.497	.0000						
.550				-.1319	-.2077		
.565			.0000				
.600							-.2427
.650						-.1648	
.700	.0088				-.1516		
.725				-.0427			
.750						.0638	.0073
.760			-.0451				
.775				.0942	.0749		
.808			.0938				
.834	.0183						
.850				.0793	.0963	.1041	
.857			.0772				
.865	.1096						
.900	.0790			.0889			.0922
.905			.0652		.0932		
.950				.0712		.0983	
.953			.0336				
.965	.0030						

ALPHAO(2) = -4.030 BETAO (2) = -4.030

SECTION (1)UPPER WING DEPENDENT VARIABLE CP

Y/BW	.2990	.3640	.4270	.5340	.6730	.7800	.8870
X/CW							
.000	.0129	.0737	.2979	.3322	.2401	.1372	.1897
.020				.3320	.3008	.3219	.2980
.025			.2604				
.040		.1578					
.045			.1759				
.050	.0120			.0862	.0848	.0829	.0320
.080				-.0865			
.085			.0185				
.086		.1863					
.094	.0151						
.150				-.2840	-.2882	-.2798	-.2997
.163		.0000					
.177			-.1997				
.193		.0004					

ARC11-716 IA14 O1+T12+S12N25 UPPER WING (RB1U42)

ALPHAO(2) = -4.030 BETAO (2) = -4.030

SECTION (1)UPPER WING DEPENDENT VARIABLE CP

Y/BW	.2990	.3640	.4270	.5340	.6730	.7800	.8870
X/CW							
.229	.0782						
.250				-.3788	-.4334	-.4730	-.5161
.274			-.2781				
.339		-.2443					
.362	.0125						
.400				-.2864	-.3659		-.3957
.402			-.2765				
.497	.0000						
.550				-.1711	-.2382		
.565			.0000				
.600							-.2443
.650						-.1859	
.700	-.0380				-.1547		
.725				-.0766			
.750						.0459	.0008
.760			-.0812				
.775				.0631	.0523		
.808			.0579				
.834	-.0259						
.850				.0608	.0796	.0903	
.857			.0475				
.865	.0635						
.900	.0425			.0697			.0853
.905			.0496		.0871		
.950				.0613		.0921	
.953			.0264				
.965	-.0123						

ALPHAO(2) = -4.040 BETAO (3) = .040

SECTION (1)UPPER WING DEPENDENT VARIABLE CP

Y/BW	.2990	.3640	.4270	.5340	.6730	.7800	.8870
X/CW							
.000	-.0234	.0484	.2501	.2269	.1089	-.0004	.0626
.020				.3249	.2816	.3017	.2689
.025			.2392				
.040		.1240					
.045			.1722				
.050	-.0150			.1051	.1064	.0998	.0412
.080				-.0476			
.085			.0415				
.086		.1627					
.094	-.0062						

ARC11-716 IA14 O1+T12+S12N25 UPPER WING (RB1U42)

ALPHAO(2) = -4.040 BETAO (3) = .040

SECTION (1)UPPER WING DEPENDENT VARIABLE CP

Y/BW	.2990	.3640	.4270	.5340	.6730	.7800	.8870
x/CW							
.150				-.2441	-.2502	-.2398	-.2722
.163		.0000					
.177			-.1614				
.193		.0225					
.229	.0659						
.250				-.3464	-.4045	-.4341	-.4829
.274			-.2506				
.339		-.2233					
.362	.0191						
.400				-.2950	-.3673		-.4013
.402			-.2844				
.497	.0000						
.550				-.2121	-.2650		
.565			.0000				
.600							-.2504
.650						-.2026	
.700	-.0842				-.1560		
.725				-.1116			
.750						.0300	-.0061
.760			-.1205				
.775				.0261	.0247		
.808			.0219				
.834	-.0723						
.850				.0358	.0587	.0745	
.857			.0105				
.865	.0184						
.900	.0065			.0487			.0788
.905			.0205		.0740		
.950				.0455		.0844	
.953			.0063				
.965	-.0317						

ALPHAO(2) = -4.040 BETAO (4) = 4.070

SECTION (1)UPPER WING DEPENDENT VARIABLE CP

Y/BW	.2990	.3640	.4270	.5340	.6730	.7800	.8870
x/CW							
.000	-.0649	.0190	.2002	.1405	-.0053	-.1179	-.0426
.020				.2976	.2374	.2598	.2228
.025			.2004				
.040		.0918					
.045			.1515				
.050	-.0440			.1065	.0948	.0845	.0176

ARC11-716 IA14 01+T12+S12N25 UPPER WING (RB1U42)

ALPHAO(2) = -4.040 BETAO (4) = 4.070

SECTION (1)UPPER WING DEPENDENT VARIABLE CP

Y/BW	.2990	.3640	.4270	.5340	.6730	.7800	.8870
X/CW							
.080				-.0273			
.085			.0483				
.086		.1332					
.094	-.0250						
.150				-.2205	-.2357	-.2278	-.2752
.163		.0000					
.177			-.1330				
.193		.0286					
.229	.0506						
.250				-.3374	-.3840	-.4205	-.4689
.274			-.2339				
.339		-.2080					
.362	.0217						
.400				-.3185	-.3819		-.4026
.402			-.3013				
.497	.0000						
.550				-.2562	-.2839		
.565			.0000				
.600							-.2545
.650						-.2190	
.700	-.1433				-.1687		
.725				-.1470			
.750						.0122	-.0149
.760			-.1578				
.775				-.0051	.0016		
.808			-.0160				
.834	-.1120						
.850				.0058	.0359	.0633	
.857			-.0164				
.865	-.0311						
.900	-.0331			.0305			.0734
.905			-.0090		.0643		
.950				.0277		.0732	
.953			-.0132				
.965	-.0635						

ARC11-716 IA14 O1+T12+S12N25 UPPER WING (RB1U42)

ALPHAO(2) = -4.040 BETAO (5) = 8.130

SECTION (1)UPPER WING DEPENDENT VARIABLE CP

Y/BW	.2990	.3640	.4270	.5340	.6730	.7800	.8870
X/CW							
.000	-.1206	-.0250	.1049	.0884	-.1039	-.2240	-.1400
.020				.2654	.1990	.2185	.1713
.025			.1879				
.040		.0255					
.045			.1449				
.050	-.0772			.0986	.0858	.0702	.0072
.080				-.0234			
.085			.0477				
.086		.1054					
.094	-.0499						
.150				-.1993	-.2101	-.2157	-.2654
.163		.0000					
.177			-.1150				
.193		.0285					
.229	.0320						
.250				-.3198	-.3717	-.3976	-.4423
.274			-.2121				
.339		-.2020					
.362	.0161						
.400				-.3329	-.3902		-.3983
.402			-.3166				
.497	.0000						
.550				-.2850	-.3068		
.565			.0000				
.600							-.2552
.650						-.2333	
.700	-.1977				-.1809		
.725				-.1677			
.750						-.0058	-.0213
.760			-.1060				
.775				-.0382	-.0188		
.800			-.0481				
.834	-.1432						
.850				-.0174	.0218	.0514	
.857			-.0393				
.865	-.0557						
.900	-.0564			.0070			.0695
.905			-.0282		.0573		
.950				.0079		.0702	
.953			-.0319				
.965	-.0004						

ARC11-716 IA14 O1+T12+S12N25 UPPER WING (RB1U42)

ALPHAO(3) = -.320 BETAO (1) = -8.060

SECTION (1)UPPER WING DEPENDENT VARIABLE CP

Y/BW	.2990	.3640	.4270	.5340	.6730	.7800	.8870
x/CW							
.000	.0398	.1145	.4223	.5616	.5364	.4968	.5202
.020				.0895	.0487	.0210	-.0044
.025			.1167				
.040		.1452					
.045			-.0154				
.050	-.0097			-.2026	-.2527	-.2708	-.3412
.080				-.4110			
.085			-.2124				
.086		.1221					
.094	-.0061						
.150				-.5806	-.6298	-.6386	-.6007
.163		.0000					
.177			-.4305				
.193		-.1488					
.229	.0473						
.250				-.5959	-.7049	-.7959	-.8269
.274			-.4489				
.339		-.3954					
.362	-.0899						
.400				-.3461	-.4388		-.4592
.402			-.3453				
.497	.0000						
.550				-.1555	-.2316		
.565			.0000				
.600							-.2768
.650						-.1678	
.700	-.0128				-.1526		
.725				-.0329			
.750						.0642	-.0066
.760			-.0291				
.775				.1003	.0785		
.808			.0982				
.834	.0217						
.850				.0917	.1051	.1123	
.857			.0822				
.865	.1158						
.900	.0955			.0991			.1006
.905			.0746		.1151		
.950				.0855		.1146	
.953			.0512				
.965	.0263						

ARC11-716 IA14 O1+T12+S12N25 UPPER WING (RB1U42)

ALPHAO(3) = -.349 BETAO (2) = -4.010

SECTION (1)UPPER WING DEPENDENT VARIABLE CP

Y/BW	.2990	.3640	.4270	.5340	.6730	.7800	.8670
X/CW							
.000	-.0111	.0741	.3690	.4846	.4463	.3986	.4251
.020				.1379	.0608	.0621	.0262
.025			.1273				
.040		.1257					
.045			.0222				
.050	-.0370			-.1452	-.1955	-.2152	-.2830
.080				-.3339			
.085			-.1637				
.086		.1169					
.094	-.0260						
.150				-.5016	-.5522	-.5654	-.5517
.163		.0000					
.177			-.3707				
.193		-.1180					
.229	.0332						
.250				-.5491	-.6455	-.7330	-.7624
.274			-.4189				
.339		-.3724					
.362	-.0741						
.400				-.3619	-.4607		-.4654
.402			-.3551				
.497	.0000						
.550				-.1993	-.2645		
.565			.0000				
.600							-.2769
.650						-.1908	
.700	-.0662				-.1540		
.725				-.0744			
.750						.0480	-.0129
.760			-.0713				
.775				.0615	.0487		
.800			.0581				
.834	-.0262						
.850				.0629	.0603	.0950	
.857			.0502				
.865	.0600						
.900	.0526			.0763			.0942
.905			.0493		.0922		
.950				.0679		.1010	
.953			.0370				
.965	.0003						

ARC11-716 IA14 O1+T12+S12N25 UPPER WING (RB1U42)

ALPHA0(3) = -.340 BETA0 (3) = .050

SECTION (1)UPPER WING DEPENDENT VARIABLE CP

Y/BW	.2990	.3640	.4270	.5340	.6730	.7800	.8870
X/CW							
.000	-.0628	.0342	.3160	.4023	.3526	.3036	.3345
.020				.1524	.0916	.0733	.0317
.025			.1286				
.040		.0986					
.045			.0344				
.050	-.0635			-.1080	-.1555	-.1850	-.2562
.080				-.2735			
.085			-.1285				
.086		.1037					
.094	-.0474						
.150				-.4452	-.4779	-.5034	-.5104
.163		.0000					
.177			-.3226				
.193		-.0934					
.229	.0217						
.250				-.5106	-.5929	-.6659	-.7074
.274			-.3809				
.339		-.3445					
.362	-.0639						
.400				-.3837	-.4659		-.4694
.402			-.3753				
.497	.0000						
.550				-.2446	-.2933		
.565			.0000				
.600							-.2724
.650						-.2087	
.700	-.1219				-.1516		
.725				-.1119			
.750						.0293	-.0139
.760			-.1150				
.775				.0251	.0244		
.808			.0162				
.834	-.0727						
.850				.0325	.0596	.0790	
.857			.0134				
.865	.0053						
.900	.0004			.0496			.0884
.905			.0194		.0784		
.950				.0524		.0859	
.953			.0129				
.965	-.0279						

ARC11-716 IA14 O1+T12+S12N25 UPPER WING (RB1U42)

ALPHAO(3) = -.350 BETAO (4) = 4.090

SECTION (1)UPPER WING DEPENDENT VARIABLE CP

Y/BW	.2990	.3640	.4270	.5340	.6730	.7800	.8870
X/CW							
.000	-.1259	-.0191	.2544	.3205	.2519	.2039	.2427
.020				.1419	.0764	.0602	.0213
.025			.1091				
.040		.0631					
.045			.0250				
.050	-.0870			-.0847	-.1175	-.1617	-.2475
.080				-.2325			
.085			-.1006				
.086		.0802					
.094	-.0614						
.150				-.4011	-.4431	-.4607	-.4920
.163		.0000					
.177			-.2814				
.193		-.0798					
.229	.0124						
.250				-.4854	-.5654	-.6234	-.6668
.274			-.3516				
.339		-.3193					
.362	-.0575						
.400				-.4021	-.4825		-.4657
.402			-.3892				
.497	.0000						
.550				-.2091	-.3187		
.565			.0000				
.600							-.2723
.650						-.2239	
.700	-.1804				-.1719		
.725				-.1505			
.750						.0048	-.0204
.760			-.1555				
.775				-.0142	-.0038		
.800			-.0261				
.834	-.1233						
.850				.0023	.0368	.0588	
.857			-.0213				
.865	-.0486						
.900	-.0405			.0286			.0837
.905			-.0108		.0657		
.950				.0307		.0758	
.953			-.0140				
.965	-.0619						

ARC11-716 TA14 O1+T12+S12N25 UPPER WING (RB1U42)

ALPHA0(3) = -.340 BETA0 (5) = 8.160

SECTION (1)UPPER WING DEPENDENT VARIABLE CP

X/CW \ Y/BW	.2990	.3640	.4270	.5340	.6730	.7800	.8870
.000	-.2105	-.0574	.0958	.2510	.1657	.0921	.1471
.020				.1424	.0702	.0735	.0181
.025			.0478				
.040		-.0163					
.045			.0099				
.050	-.1327			-.0549	-.0930	-.1226	-.2178
.080				-.1914			
.085			-.0712				
.086		.0027					
.094	-.1095						
.150				-.3546	-.3876	-.4098	-.4563
.163		.0000					
.177			-.2263				
.193		-.0454					
.229	.0036						
.250				-.4415	-.5243	-.5743	-.6135
.274			-.3149				
.339		-.2840					
.362	-.0460						
.400				-.4052	-.4830		-.4538
.402			-.3807				
.497	.0000						
.550				-.3201	-.3414		
.565			.0000				
.600							-.2630
.650						-.2346	
.700	-.2205				-.1806		
.725				-.1704			
.750						-.0057	-.0218
.760			-.1871				
.775				-.0525	-.0235		
.808			-.0596				
.834	-.1379						
.850				-.0255	.0196	.0317	
.857			-.0489				
.865	-.0814						
.900	-.0652			.0015			.0792
.905			-.0286		.0463		
.950				.0038		.0705	
.953			-.0275				
.965	-.0736						

ARC11-716 IA14 O1+T12+S12N25 UPPER WING (RB1U42)

ALPHAO(4) = 4.220 BETAO (1) = -8.060

SECTION (1)UPPER WING DEPENDENT VARIABLE CP

Y/BW	.2990	.3640	.4270	.5340	.6730	.7800	.8870
X/CW							
.000	-.0091	.0281	.3838	.5786	-.2355	.0368	.2896
.020				-.2520	-.2784	-.1140	-.0385
.025			-.1204				
.040		.0543					
.045			-.2661				
.050	-.0693			-.5685	-.3381	-.2053	-.0411
.080				-.8011			
.085			-.4861				
.086		.0166					
.094	-.0525						
.150				-.9246	-.2429	-.2027	.0108
.163		.0000					
.177			-.7027				
.193		-.3175					
.229	.0015						
.250				-.2640	-.1513	-.1756	.0394
.274			-.6548				
.339		- 5717					
.362	-.1962						
.400				-.3198	-.1545		.3540
.402			-.4089				
.497	.0000						
.550				.9757	-.2478		
.565			.0000				
.600							-.0977
.650						-.1105	
.700	-.0480				-.3362		
.725				.7872			
.750						-.0408	-.1201
.760			-.0030				
.775				.9495	-.3815		
.808			.0963				
.834	.0418						
.850				.6452	-.3802	.0970	
.857			.0942				
.865	.1370						
.900	.1206			.5153			-.2643
.905			.0918		-.3279		
.950				.3966		.1912	
.953			.0609				
.965	.0478						

ARC11-716 IA14 O1+T12+S12N25 UPPER WING (RB1U42)

ALPHAO(4) = 4.210 BETAO (2) = -4.030

SECTION (1)UPPER WING DEPENDENT VARIABLE CP

Y/BW	.2990	.3640	.4270	.5340	.6730	.7800	.8870
X/CW							
.000	-.0624	.0076	.3606	.5399	.4972	.4191	.3792
.020				-.1810	-.3192	-.4525	-.5984
.025			-.0816				
.040		.0521					
.045			-.2084				
.050	-.0921			-.4830	-.6285	-.7502	-.9248
.060				-.7010			
.065			-.4039				
.086		.0216					
.094	-.0736						
.150				-.8410	-.9700	-1.0560	-.9875
.163		.0000					
.177			-.6208				
.193		-.2753					
.229	-.0110						
.250				-.8177	-1.0060	-1.1490	-1.1430
.274			-.6102				
.339		-.5406					
.362	-.1754						
.400				-.4363	-.5150		-.5063
.402			-.4396				
.497	.0000						
.550				-.2015	-.2730		
.565			.0000				
.600							-.3200
.650						-.1889	
.700	-.0971				-.1421		
.725				-.0499			
.750						.0411	-.0407
.760			-.0457				
.775				.0709	.0629		
.808			.0662				
.834	-.0085						
.850				.0753	.0953	.1005	
.857			.0624				
.865	.0785						
.900	.0753			.0865			.0794
.905			.0617		.1158		
.950				.0865		.1129	
.953			.0499				
.965	.0246						

ARC11-716 IA14 O1+T12+S12N25 UPPER WING (RB1U42)

ALPHAO(4) = 4.210 BETAO (3) = .030

SECTION (1)UPPER WING DEPENDENT VARIABLE CP

Y/BW	.2990	.3640	.4270	.5340	.6730	.7800	.8870
X/CW							
.000	-.1213	-.0449	.3190	.4824	.4454	.3706	.3330
.020				-.1330	-.2640	-.3880	-.5334
.025			-.0482				
.040		.0374					
.045			-.1697				
.050	-.1129			-.4061	-.5321	-.6531	-.8316
.080				-.5930			
.085			-.3435				
.086		.0212					
.094	-.0839						
.150				-.7253	-.8355	-.8943	-.9081
.163		.0000					
.177			-.5348				
.193		-.2309					
.229	-.0162						
.250				-.7187	-.8829	-1.0230	-1.0160
.274			-.5544				
.339		-.4896					
.362	-.1538						
.400				-.4617	-.5351		-.5259
.402			-.4639				
.497	.0000						
.550				-.2542	-.3016		
.565			.0000				
.600							-.3083
.650						-.2041	
.700	-.1459				-.1462		
.725				-.0899			
.750						.0323	-.0298
.760			-.0861				
.775				.0367	.0382		
.808			.0249				
.834	-.0583						
.850				.0511	.0756	.0910	
.857			.0310				
.865	.0240						
.900	.0272			.0659			.0874
.905			.0342		.0975		
.950				.0673		.1076	
.953			.0312				
.965	.0001						

ARC11-716 IA14 O1+T12+S12N25 UPPER WING (RB1U42)

ALPHAO(4) = 4.200 BETAO (4) = 4.090

SECTION (1)UPPER WING DEPENDENT VARIABLE CP

Y/BW	.2090	.3640	.4270	.5340	.6730	.7800	.8870
X/CW							
.000	-.2121	-.1276	.2331	.4138	.3796	.3177	.2940
.020				-.1011	-.2304	-.3375	-.4787
.025			-.0569				
.040		-.0074					
.045			-.1593				
.050	-.1319			-.3551	-.4791	-.5820	-.7615
.080				-.5155			
.085			-.2956				
.086		.0005					
.094	-.1071						
.150				-.6337	-.7537	-.8045	-.8322
.163		.0000					
.177			-.4611				
.193		-.2025					
.229	-.0265						
.250				-.6610	-.7835	-.9244	-.9321
.274			-.5011				
.339		-.4415					
.362	-.1360						
.400				-.4810	-.5585		-.5224
.402			-.4660				
.497	.0000						
.550				-.2953	-.3288		
.565			.0000				
.600							-.2940
.650						-.2173	
.700	-.1972				-.1601		
.725				-.1279			
.750						.0200	-.0192
.760			-.1136				
.775				.0017	.0172		
.808			-.0180				
.834	-.1124						
.850				.0209	.0609	.0809	
.857			-.0147				
.865	-.0281						
.900	-.0169			.0421			.0906
.905			-.0005		.0890		
.950				.0472		.1038	
.953			.0033				
.965	-.0351						

ARC11-716 IA14 O1+T12+S12N25 UPPER WING (RB1U42)

ALPHAO(4) = 4.190 BETAO (5) = 8.160

SECTION (1)UPPER WING DEPENDENT VARIABLE CP

Y/BW	.2990	.3640	.4270	.5340	.6730	.7800	.8870
X/CW							
.000	-.3258	-.1371	.0294	.2787	.3268	.2704	.2659
.020				-.0721	-.1622	-.2498	-.3857
.025			-.0981				
.040		-.0686					
.045			-.1432				
.050	-.1959			-.2652	-.3667	-.4692	-.6414
.080				-.4019			
.085			-.2290				
.086		-.0531					
.094	-.2218						
.150				-.5262	-.6267	-.6935	-.7354
.163		.0000					
.177			-.3596				
.193		-.1707					
.229	-.0179						
.250				-.5738	-.6994	-.8077	-.8363
.274			-.4156				
.339		-.3876					
.362	-.1157						
.400				-.4581	-.5504		-.5069
.402			-.4309				
.497	.0000						
.550				-.3120	-.3417		
.565			.0000				
.600							-.2746
.650						-.2190	
.700	-.2337				-.1684		
.725				-.1500			
.750						.0178	-.0100
.760			-.1726				
.775				-.0490	-.0032		
.808			-.0638				
.834	-.1431						
.850				-.0154	.0363	.0733	
.857			-.0502				
.885	-.0784						
.900	-.0592			.0077			.0989
.905			-.0253		.0709		
.950				.0187		.0938	
.953			-.0183				
.965	-.0587						

ARC11-716 IA14 O1+T12+S12N25 UPPER WING (RB1U42)

ALPHAO(5) = 8.070 BETAO (1) = -8.050

SECTION (1)UPPER WING DEPENDENT VARIABLE CP

Y/BW	.2990	.3640	.4270	.5340	.6730	.7800	.8870
X/CW							
.000	-.0628	-.0072	.3322	.5476	.4213	.2577	.1785
.020				-.5483	-.7425	-.9944	-1.1830
.025			-.3084				
.040		-.0302					
.045			-.4826				
.050	-.1237			-.8673	-1.0840	-1.2410	-1.4720
.080				-1.1010			
.085			-.7301				
.086		-.0813					
.094	-.0916						
.150				-1.3670	-1.5230	-1.4130	-1.4010
.163		.0000					
.177			-.9520				
.193		-.4566					
.229	-.0334						
.250				-1.2560	-1.4410	-1.0970	-.9991
.274			-.8581				
.339		-.8058					
.362	-.2718						
.400				-.4071	-.7580		-.6981
.402			-.4209				
.497	.0000						
.550				-.1790	-.3693		
.565			.0000				
.600							-.4594
.650						-.3730	
.700	-.0706				-.1543		
.725				-.0271			
.750						-.2183	-.3529
.760			-.0320				
.775				.0795	-.0012		
.808			.0620				
.834	.0337						
.850				.0874	.0619	-.0991	
.857			.0693				
.865	.1184						
.900	.1198			.0982			-.2200
.905			.0746		.1063		
.950				.0982		-.0282	
.953			.0663				
.965	.0605						

ARC11-716 IA14 O1+T12+S12N25 UPPER WING (RB1U42)

ALPHAO(5) = 8.000 BETAO (2) = -3.990

SECTION (1)UPPER WING DEPENDENT VARIABLE CP

Y/BW	.2990	.3640	.4270	.5340	.6730	.7800	.8870
X/CW							
.000	-.1262	-.0959	.2971	.5214	.4061	.2332	.1303
.020				-.4676	-.6807	-.9615	-1.1760
.025			-.2557				
.040		-.0422					
.045			-.4181				
.050	-.1442			-.7780	-1.0230	-1.1970	-1.4640
.080				-1.0080			
.085			-.6335				
.086		-.0727					
.094	-.1162						
.150				-1.1980	-1.4460	-1.5050	-1.4890
.163		.0000					
.177			-.8238				
.193		-.4034					
.229	-.0457						
.250				-.9826	-1.4390	-1.4360	-1.3590
.274			-.7754				
.339		-.7213					
.362	-.2567						
.400				-.4612	-.4825		-.6948
.402			-.4900				
.497	.0000						
.550				-.1985	-.2796		
.565			.0005				
.600							-.3706
.650						-.2090	
.700	-.1178				-.1370		
.723				-.0350			
.750						-.0518	-.1761
.760			-.0382				
.775				.0694	.0414		
.800			.0591				
.834	-.0103						
.850				.0819	.0865	.0374	
.857			.0628				
.865	.0009						
.900	.0067			.0905			-.0332
.905			.0661		.1112		
.950				.0919		.0722	
.953			.0580				
.965	.0439						

ARC11-716 IA14 O1+T12+S12N25 UPPER WING (RB1U42)

ALPHAO(5) = 7.970 BETAO (3) = .050

SECTION (1)UPPER WING DEPENDENT VARIABLE CP

X/CW \ Y/BW	.2990	.3640	.4270	.5340	.6730	.7800	.8870
.000	-.1985	-.1629	.2431	.4686	.3848	.2229	.1049
.020				-.3894	-.6032	-.8845	-1.1220
.025			-.2156				
.040		-.0501					
.045			-.3483				
.050	-.1647			-.6794	-.9171	-1.1150	-1.3920
.060				-.8815			
.065			-.5386				
.086		-.0650					
.094	-.1271						
.150				-1.0050	-1.2730	-1.3850	-1.4450
.163		.0000					
.177			-.7264				
.193		-.3522					
.229	-.0510						
.250				-.9156	-1.1980	-1.3840	-1.3440
.274			-.7155				
.339		-.6302					
.362	-.2259						
.400				-.5024	-.5319		-.5903
.402			-.5289				
.497	.0000						
.550				-.2393	-.2894		
.565			.0000				
.600							-.3371
.650						-.1913	
.700	-.1752				-.1351		
.725				-.0666			
.750						.0061	-.1037
.760			-.0682				
.775				.0361	.0328		
.808			.0361				
.834	-.0543						
.850				.0564	.0761	.0699	
.857			.0406				
.865	.0301						
.900	.0500			.0726			.0422
.905			.0508		.1064		
.950				.0763		.0976	
.953			.0443				
.965	.0201						

ARC11-716 IA14 O1+T12+S12N25 UPPER WING (RB1U42)

ALPHAO(5) = 7.960 BETAO (4) = 4.130

SECTION (1)UPPER WING DEPENDENT VARIABLE CP

Y/BW	.2990	.3640	.4270	.5340	.6730	.7800	.8870
X/CW							
.000	-.3118	-.2859	.1382	.3985	.3526	.2125	.0943
.020				-.3377	-.5326	-.7897	-1.0630
.025			-.2203				
.040		-.0864					
.045			-.3195				
.050	-.1878			-.5960	-.8144	-1.0150	-1.3070
.060				-.7752			
.085			-.4810				
.086		-.0848					
.094	-.1459						
.150				-.8489	-1.0900	-1.2090	-1.3100
.163		.0000					
.177			-.6319				
.193		-.3089					
.229	-.0762						
.250				-.8431	-1.0710	-1.2590	-1.2130
.274			-.6280				
.339		-.5445					
.362	-.2124						
.400				-.5150	-.5728		-.5197
.402			-.5234				
.497	.0000						
.550				-.2784	-.5100		
.565			.0000				
.600							-.3312
.650						-.2071	
.700	-.2115				-.1426		
.725				-.1024			
.750						.0197	-.0670
.760			-.1026				
.775				.0040	.0241		
.808			-.0122				
.834	-.0921						
.850				.0328	.0654	.0801	
.857			-.0042				
.865	-.0020						
.900	.0103			.0512			.0648
.905			.0021		.0994		
.950				.0655		.1040	
.953			.0063				
.965	-.0208						

ARC11-716 IA14 O1+T12+S12N25 UPPER WING (RB1U42)

ALPHAO(5) = 7.940 BETAO (5) = 8.220

SECTION (1)UPPER WING DEPENDENT VARIABLE CP

Y/BW	.2990	.3640	.4270	.5340	.6730	.7800	.8670
X/CW							
.000	-.4486	-.2338	-.1133	.2573	.3291	.2081	.1053
.020				-.3193	-.4328	-.6534	-.9485
.025			-.2403				
.040		-.1264					
.045			-.2807				
.050	-.2564			-.4899	-.6778	-.8539	-1.1580
.060				-.6260			
.085			-.3492				
.086		-.1171					
.094	-.2665						
.150				-.6898	-.8647	-1.0160	-1.1110
.163		.0000					
.177			-.4473				
.193		-.2600					
.229	-.0979						
.250				-.6863	-.8955	-1.0650	-1.0540
.274			-.4859				
.339		-.4498					
.362	-.1694						
.400				-.4888	-.5767		-.5067
.402			-.4543				
.497	.0000						
.550				-.3083	-.3253		
.565			.0000				
.600							-.3089
.650						-.2114	
.700	-.2168				-.1693		
.725				-.1362			
.750						.0143	-.0383
.760			-.1625				
.775				-.0515	.0069		
.808			-.0706				
.834	-.1402						
.850				-.0143	.0471	.0785	
.857			-.0549				
.865	-.0770						
.900	-.0554			.0099			.0816
.905			-.0293		.0822		
.950				.0159		.1038	
.953			-.0251				
.965	-.0584						

ARC11-716 IA14 O1+T12+S12N25 UPPER WING (RB1U43) (15 FEB 74)

REFERENCE DATA

SREF = 2.4210 SQ.FT. XMRP = 29.5800 INCHES
LREF = 38.7090 INCHES YMRP = .0000 INCHES
BREF = 38.7090 INCHES ZMRP = .0000 INCHES
SCALE = .0300 SCALE

ALPHAO(1) = -7.890 BETAO (1) = -8.020

PARAMETRIC DATA

MACH = .850 ELEVON = .000
RUDDER = .000 SPOBRK = .000

SECTION (1)UPPER WING DEPENDENT VARIABLE CP

Y/BW	.2990	.3640	.4270	.5340	.6730	.7800	.8870
X/CW							
.000	.0427	.0571	.2720	.3062	.2004	.0875	.1475
.020				.5169	.4957	.5089	.4735
.025			.4035				
.040		.2213					
.045			.3389				
.050	.0870			.2933	.3150	.3180	.2665
.080				.1244			
.085			.1979				
.086		.2840					
.094	.0918						
.150				-.1001	-.0790	-.0532	-.0943
.163		.0000					
.177			-.0334				
.193		.1498					
.229	.1625						
.250				-.2315	-.2694	-.3100	-.3828
.274			-.1341				
.339		-.1107					
.362	.1352.						
.400				-.1721	-.2698		-.3564
.402			-.1569				
.497	.0000						
.550				-.0905	-.1751		
.565			.0000				
.600							-.2291
.650						-.1503	
.700	.0676				-.1589		
.725				-.0347			
.750						.1062	.0422
.760			-.0469				
.775				.1287	.1058		
.808			.1241				
.834	.0317						
.850				.0983	.1138	.1248	
.857			.0934				
.865	.1377						
.900	.1025			.1003			.0957
.905			.0768		.1027		

ARC11-716 IA14 O1+T12+S12N25 UPPER WING (RB1U43)

ALPHAO(1) = -7.890 BETAO (1) = -8.020

SECTION (1)UPPER WING DEPENDENT VARIABLE CP

Y/BW	.2990	.3640	.4270	.5340	.6730	.7800	.8870
X/CW							
.950				.0639		.1138	
.953			.0293				
.965	.0034						

ALPHAO(1) = -7.780 BETAO (2) = -4.000

SECTION (1)UPPER WING DEPENDENT VARIABLE CP

Y/BW	.2990	.3640	.4270	.5340	.6730	.7800	.8870
X/CW							
.000	.0064	.0062	.1936	.1983	.0709	-.0496	.0120
.020				.4979	.4469	.4660	.4205
.025			.3781				
.040		.1752					
.045			.3288				
.050	.0520			.3001	.3113	.3118	.2419
.080				.1501			
.085			.2139				
.086		.2536					
.094	.0614						
.150				-.0669	-.0814	-.0343	-.0955
.163		.0000					
.177			-.0089				
.193		.1590					
.229	.1399						
.250				-.2102	-.2410	-.2816	-.3642
.274			-.1139				
.339		-.0976					
.362	.1350						
.400				-.1932	-.2822		-.3869
.402			-.1777				
.497	.0000						
.550				-.1449	-.2192		
.565			.0000				
.600							-.2494
.650						-.1830	
.700	.0050				-.1606		
.725				-.0814			
.750						.0765	.0233
.760			-.0988				
.775				.0894	.0727		
.808			.0784				
.834	-.0372						
.850				.0646	.0848	.1013	

ARC11-716 IA14 01+T12+S12N25 UPPER WING (RB1U43)

ALPHAO(1) = -7.780 BETAO (2) = -4.000

SECTION (1)UPPER WING DEPENDENT VARIABLE CP

Y/BW	.2990	.3640	.4270	.5340	.6730	.7800	.8870
X/CW							
.857			.0489				
.865	.0732						
.900	.0488			.0700			.0729
.905			.0368		.0820		
.950				.0440		.0926	
.953			-.0021				
.965	-.0284						

ALPHAO(1) = -7.780 BETAO (3) = .040

SECTION (1)UPPER WING DEPENDENT VARIABLE CP

Y/BW	.2990	.3640	.4270	.5340	.6730	.7800	.8870
X/CW							
.000	-.0133	-.0128	.1276	.0903	-.0755	-.2119	-.1308
.020				.4693	.3939	.4046	.3522
.025			.3409				
.040		.1316					
.045			.3155				
.050	.0265			.3013	.2925	.2812	.2144
.080				.1667			
.085			.2204				
.086		.2208					
.094	.0344						
.150				-.0445	-.0393	-.0313	-.1017
.163		.0000					
.177			.0247				
.193		.1639					
.229	.1218						
.250				-.1915	-.2307	-.2695	-.3617
.274			-.0961				
.339		-.0810					
.362	.1349						
.400				-.2156	-.3044		-.4179
.402			-.1863				
.497	.0000						
.550				-.2032	-.2741		
.565			.0000				
.600							-.2760
.650						-.2262	
.700	-.0648				-.1787		
.725				-.1436			
.750						.0354	-.0142
.760			-.1595				

ARC11-716 IA14 O1+T12+S12N2! UPPER WING (RB1U43)

ALPHAO(1) = -7.780 BETAO (3) = .040

SECTION (1)UPPER WING DEPENDENT VARIABLE CP

Y/BW	.2990	.3640	.4270	.5340	.6730	.7800	.8870
X/CW							
.775				.0311	.0302		
.808			.0219				
.834	-.1028						
.850				.0202	.0495	.0630	
.857			-.0016				
.865	.0147						
.900	.0025			.0331			.0340
.905			.0016		.0485		
.950				.0143		.0576	
.953			-.0229				
.965	-.0580						

ALPHAO(1) = -7.850 BETAO (4) = 4.110

SECTION (1)UPPER WING DEPENDENT VARIABLE CP

Y/BW	.2990	.3640	.4270	.5340	.6730	.7800	.8870
X/CW							
.000	-.0229	-.0028	.0816	-.0066	-.1967	-.3446	-.2611
.020				.4294	.3330	.3372	.2724
.025			.2913				
.040		.1029					
.045			.2756				
.050	.0041			.2911	.2637	.2408	.1680
.080				.1793			
.085			.2118				
.086		.1851					
.094	.0179						
.150				-.0247	-.0326	-.0365	-.1240
.163		.0000					
.177			.0487				
.193		.1562					
.229	.0998						
.250				-.1734	-.2211	-.2655	-.3722
.274			-.0784				
.339		-.0643					
.362	.1287						
.400				-.2395	-.3276		-.4537
.402			-.2021				
.497	.0000						
.550				-.2710	-.3304		
.565			.0000				
.600							-.2952
.650						-.2580	

ARC11-716 IA14 O1+T12+S12N25 UPPER WING (RB1U43)

ALPHAO(1) = -7.850 BETAO (4) = 4.110

SECTION (1)UPPER WING DEPENDENT VARIABLE CP

Y/BW	.2990	.3640	.4270	.5340	.6730	.7800	.8870
X/CW							
.700	-.1354				-.1902		
.725				-.1893			
.750						.0077	-.0361
.760			-.2086				
.775				-.0090	-.0047		
.808			-.0295				
.834	-.1590						
.850				-.0145	.0188	.0412	
.857			-.0379				
.865	-.0445						
.900	-.0463			.0060			.0239
.905			-.0373		.0173		
.950				-.0127		.0416	
.953			-.0500				
.955	-.0868						

ALPHAO(1) = -7.890 BETAO (5) = 8.170

SECTION (1)UPPER WING DEPENDENT VARIABLE CP

Y/BW	.2990	.3640	.4270	.5340	.6730	.7800	.8870
X/CW							
.000	-.0618	-.0264	.0827	-.0665	-.3040	-.4603	-.4055
.020				.3896	.2785	.2723	.1951
.025			.2619				
.040		.0850					
.045			.2470				
.050	-.0195			.2738	.2337	.2038	.1189
.080				.1719			
.085			.1943				
.086		.1634					
.094	-.0024						
.150				-.0112	-.0325	-.0401	-.1466
.163		.0000					
.177			.0405				
.193		.1351					
.229	.0803						
.250				-.1641	-.2132	-.2632	-.3896
.274			-.0768				
.339		-.0783					
.362	.0951						
.400				-.2575	-.3510		-.5024
.402			-.2174				
.497	.0000						

ARC11-716 IA14 O1+T12+S12N25 UPPER WING (RB1U43)

ALPHAO(1) = -7.890 BETAO (5) = 8.170

SECTION (1)UPPER WING DEPENDENT VARIABLE CP

Y/BW	.2990	.3640	.4270	.5340	.6730	.7800	.8870
X/CW							
.550				-.3437	-.4036		
.565			.0000				
.600							-.2865
.650						-.2709	
.700	-.2126				-.2086		
.725				-.2213			
.750						-.0050	-.0230
.760			-.2566				
.775				-.0358	-.0246		
.808			-.0614				
.834	-.1997						
.850				-.0289	.0109	.0423	
.857			-.0632				
.865	-.0957						
.900	-.0754			-.0046			.0539
.905			-.0451		.0273		
.950				-.0160		.0579	
.953			-.0578				
.965	-.0969						

ALPHAO(2) = -3.880 BETAO (1) = -8.060

SECTION (1)UPPER WING DEPENDENT VARIABLE CP

Y/BW	.2990	.3640	.4270	.5340	.6730	.7800	.8870
X/CW							
.000	.0675	.1425	.3972	.4924	.4327	.3581	.3906
.020				.3494	.3151	.3275	.3129
.025			.2944				
.040		.2197					
.045			.1916				
.050	.0504			.0747	.0626	.0643	.0138
.080				-.1214			
.085			.0119				
.086		.2301					
.094	.0537						
.150				-.3464	-.3564	-.3459	-.3506
.163		.0000					
.177			-.2399				
.193		.0162					
.229	.1148						
.250				-.4714	-.5409	-.5945	-.6449
.274			-.3293				
.339		-.2826					

ARC11-716 IA14 O1+T12+S12N25 UPPER WING (RB1U43)

ALPHAO(2) = -3.880 BETAO (1) = -8.060

SECTION (1)UPPER WING DEPENDENT VARIABLE CP

Y/BW	.2990	.3640	.4270	.5340	.6730	.7800	.8870
X/CW							
.362	.0356						
.400				-.2933	-.4244		-.6546
.402			-.2869				
.497	.0000						
.550				-.1413	-.2180		
.565			.0000				
.600							-.2579
.650						-.1666	
.700	.0207				-.1681		
.725				-.0409			
.750						.0929	.0177
.760			-.0344				
.775				.1213	.1037		
.808			.1179				
.834	.0219						
.850				.0955	.1083	.1204	
.857			.0932				
.865	.1303						
.900	.0969			.0928			.0984
.905			.0740		.0852		
.950				.0583		.0927	
.953			.0267				
.965	.0079						

ALPHAO(2) = -3.890 BETAO (2) = -4.020

SECTION (1)UPPER WING DEPENDENT VARIABLE CP

Y/BW	.2990	.3640	.4270	.5340	.6730	.7800	.8870
X/CW							
.000	.0216	.0927	.3277	.3920	.3033	.2202	.2644
.020				.3608	.3112	.3239	.2937
.025			.2879				
.040		.1835					
.045			.2036				
.050	.0184			.1080	.1031	.0937	.0231
.080				-.0704			
.085			.0535				
.086		.2099					
.094	.0265						
.150				-.2871	-.2912	-.2786	-.3315
.163		.0000					
.177			-.1804				
.193		.0395					

ARC11-716 IA14 O1+T12+S12N25 UPPER WING (RB1U43)

ALPHAO(2) = -3.990 BETAO (2) = -4.020

SECTION (1)UPPER WING DEPENDENT VARIABLE CP

X/CW \ Y/BW	.2990	.3640	.4270	.5340	.6730	.7800	.8870
.229	.0973						
.250				-.4170	-.4615	-.5290	-.6128
.274			-.2821				
.339		-.2555					
.362	.0421						
.400				-.3140	-.4292		-.6391
.432			-.2983				
.497	.0000						
.550				-.2046	-.2704		
.565			.0000				
.600							-.2698
.650						-.1993	
.700	-.0300				-.1645		
.725				-.0943			
.750						.0696	.0046
.760			-.1045				
.775				.0788	.0698		
.808			.0659				
.834	-.0490						
.850				.0614	.0641	.0966	
.857			.0434				
.865	.0653						
.900	.0419			.0624			.0865
.935			.0343		.0623		
.950				.0381		.0811	
.953			.0002				
.965	-.0230						

ALPHAO(2) = -3.640 BETAO (3) = .030

SECTION (1)UPPER WING DEPENDENT VARIABLE CP

X/CW \ Y/BW	.2990	.3640	.4270	.5340	.6730	.7800	.8870
.000	-.0136	.0625	.2703	.2930	.1789	.0888	.1481
.020				.3457	.2846	.3034	.2576
.025			.2644				
.040		.1476					
.045			.1979				
.050	-.0082			.1226	.1160	.1048	.0175
.080				-.0360			
.085			.0621				
.086		.1874					
.094	.0018						

ARC11-716 IA14 OI+T12+S12N25 UPPER WING (RB1U43)

ALPHAO(2) = -3.640 BETAO (3) = .030

SECTION (1)UPPER WING DEPENDENT VARIABLE CP

Y/BW	.2990	.3640	.4270	.5340	.6730	.7800	.8870
X/CW							
.150				-.2405	-.2527	-.2467	-.3188
.163		.0000					
.177			-.1489				
.193		.0484					
.229	.0820						
.250				-.3736	-.4237	-.4884	-.5932
.274			-.2544				
.339		-.2167					
.362	.0454						
.400				-.3323	-.4493		-.6382
.402			-.3137				
.497	.0000						
.550				-.2772	-.3417		
.565			.0000				
.600							-.2860
.650						-.2331	
.700	-.1107				-.1769		
.725				-.1451			
.750						.0468	-.0038
.760			-.1565				
.775				.0340	.0355		
.808			.0145				
.834	-.0984						
.850				.0288	.0565	.0759	
.857			.0051				
.865	.0034						
.900	-.0060			.0393			.0757
.905			.0117		.0515		
.950				.0240		.0676	
.953			-.0073				
.965	-.0471						

ALPHAO(2) = -3.880 BETAO (4) = 4.090

SECTION (1)UPPER WING DEPENDENT VARIABLE CP

Y/BW	.2990	.3640	.4270	.5340	.6730	.7800	.8870
X/CW							
.000	-.0513	.0404	.2171	.1965	.0622	-.0422	.0304
.020				.3137	.2462	.2645	.2093
.025			.2265				
.040		.1106					
.049			.1736				
.090	-.0274			.1280	.1069	.0889	.0118

ARC11-716 IA14 OI+T12+S12N25 UPPER WING (R81U43)

ALPHAD(2) = -3.880 BETAD (4) = 4.090

SECTION (1)UPPER WING DEPENDENT VARIABLE CP

Y/BW	.2990	.3640	.4270	.5340	.6730	.7800	.8870
X/CW							
.080				-.0126			
.085			.0681				
.086		.1472					
.094	-.0115						
.150				-.1992	-.2197	-.2256	-.3100
.163		.0000					
.177			-.1103				
.193		.0481					
.229	.0621						
.250				-.3294	-.3909	-.4554	-.5711
.274			-.2186				
.339		-.1909					
.362	.0444						
.400				-.3409	-.4575		-.6546
.402			-.3102				
.497	.0000						
.550				-.3514	-.4698		
.565			.0000				
.600							-.2823
.650						-.2523	
.700	-.1900				-.1872		
.725				-.1891			
.750						.0296	-.0095
.760			-.2057				
.775				-.0081	.0110		
.808			-.0292				
.834	-.1695						
.850				-.0036	.0336	.0646	
.857			-.0303				
.865	-.0814						
.900	-.0555			.0109			.0718
.905			-.0267		.0455		
.950				.0105		.0640	
.953			-.0333				
.965	-.0815						

ARC11-716 IA14 O1+T12+S12N25 UPPER WING (RB1U43)

ALPHAO(2) = -3.900 BETAO (5) = 8.150

SECTION (1)UPPER WING DEPENDENT VARIABLE CP

Y/BW	.2990	.3640	.4270	.5340	.6730	.7800	.8870
X/CW							
.000	-.1171	-.0106	.0957	.1507	-.029[illegible]	-.1541	-.0801
.020				.2918	.2135	.2234	.1653
.025			.2035				
.040		.0171					
.045			.1692				
.050	-.0714			.1273	.1066	.0769	-.0041
.080				.0080			
.085			.0786				
.086		.1176					
.094	-.0469						
.150				-.1670	-.1975	-.1997	-.2983
.163		.0000					
.177			-.0901				
.193		.0441					
.229	.0421						
.250				-.2990	-.3600	-.4240	-.5571
.274			-.1921				
.339		-.1757					
.362	.0303						
.490				-.3434	-.4612		-.6699
.402			-.3039				
.497	.0000						
.550				-.4148	-.5417		
.565			.0000				
.600							-.2370
.650						-.2470	
.700	-.2607				-.2058		
.725				-.2307			
.750						.0270	-.0021
.760			-.2498				
.775				-.0433	.0000		
.808			-.0802				
.834	-.2319						
.850				-.0271	.0271	.0629	
.857			-.0670				
.865	-.1323						
.900	-.0969			-.0087			.0790
.905			-.0493		.0373		
.950				-.0107		.0676	
.953			-.0532				
.985	-.0940						

ARC11-716 IA14 O1+T12+S12N25 UPPER WING (RB1U43)

ALPHAO(3) = -.310 BETAO (1) = -8.080

SECTION (1)UPPER WING DEPENDENT VARIABLE CP

Y/BW	.2990	.3640	.4270	.5340	.6730	.7800	.8870
X/CW							
.000	.0421	.1357	.4348	.5990	.5660	.5276	.5408
.020				.1353	.0763	.0489	.0052
.025			.1422				
.040		.1733					
.045			.0165				
.050	-.0034			-.1670	-.2149	-.2487	-.3410
.080				-.3830			
.085			-.1901				
.086		.1519					
.094	.0079						
.150				-.61[illegible]	.6755	-.6468	-.6275
.163		.0000					
.177			-.4354				
.193		-.1163					
.229	.0712						
.250				-.6832	-.7836	-.8812	-.8784
.274			-.4945				
.339		-.4783					
.362	-.0541						
.400				-.3808	-.5122		-1.0700
.402			-.3948				
.497	.0000						
.550				-.1511	-.1988		
.565			.0000				
.600							-.1818
.650						-.1040	
.700	-.0117				-.1601		
.725				-.0204			
.750						.1005	.0207
.760			-.0141				
.775				.1274	.1085		
.808			.1202				
.834	.0334						
.850				.1111	.1221	.1300	
.857			.1047				
.865	.1404						
.900	.1186			.1028			.1097
.905			.0852		.0997		
.950				.0753		.1059	
.953			.0460				
.965	.0340						

DATE 10 JAN 75 TABULATED PRESSURE DATA - IA14A - VOL. 6

ARC11-716 IA14 C:+T12+S12N25 UPPER WING (RB1U43)

ALPHAO(3) = -.330 BETAO (2) = -5.040

SECTION (1)UPPER WING DEPENDENT VARIABLE CP

Y/BW	.2990	.3640	.4270	.5340	.6730	.7800	.8870
X/CW							
.000	.0053	.1009	.3937	.5405	.5014	.4601	.4770
.020				.1474	.0880	.0646	.0164
.025			.1481				
.040		.1497					
.045			.0339				
.050	-.0241			-.1360	-.1873	-.2236	-.3190
.080				-.3485			
.085			-.1488				
.086		.1424					
.094	-.0152						
.150				-.5574	-.6099	-.5994	-.6031
.163		.0000					
.177			-.4000				
.193		-.0984					
.229	.0561						
.250				-.6585	-.7632	-.8271	-.8462
.274			-.4774				
.339		-.4336					
.362	-.0475						
.400				-.4082	-.5415		-1.0230
.402			-.4225				
.497	.0000						
.550				-.2086	-.2424		
.565			.0000				
.600							-.1983
.650						-.1449	
.700	-.0633				-.1560		
.725				-.0581			
.750						.0861	.0108
.760			-.0568				
.775				.0967	.0872		
.800			.0854				
.834	-.0112						
.850				.0856	.0990	.1152	
.857			.0675				
.865	.0918						
.900	.0765			.0866			.0989
.905			.0615		.0812		
.950				.0634		.0913	
.953			.0394				
.965	.0113						

ARC11-716 IA14 01+T12+S12N25 UPPER WING (RB1U43)

ALPHAO(3) = -.340 BETAO (3) = .040

SECTION (1)UPPER WING DEPENDENT VARIABLE CP

Y/BW	.2990	.3640	.4270	.5340	.6730	.7800	.8870
X/CW							
.000	-.0558	.0578	.3212	.4398	.3764	.3246	.3538
.020				.1729	.0989	.0788	.0272
.025			.1465				
.040		.1235					
.045			.0515				
.050	-.0458			-.0828	-.1311	-.1758	-.2759
.080				-.2598			
.085			-.1044				
.086		.1272					
.094	-.0318						
.150				-.4484	-.5062	-.5280	-.5629
.163		.0000					
.177			-.3223				
.193		-.0692					
.229	.0443						
.250				-.5700	-.6842	-.7450	-.8106
.274			-.4022				
.339		-.3585					
.362	-.0340						
.400				-.4371	-.5782		-.9670
.402			-.4288				
.497	.0000						
.550				-.3241	-.3565		
.565			.0000				
.600							-.2335
.650						-.1962	
.700	-.1563				-.1660		
.725				-.1265			
.750						.0524	-.0009
.760			-.1330				
.775				.0336	.0468		
.808			.0247				
.834	-.0972						
.850				.0376	.0659	.0855	
.857			.0183				
.865	-.0017						
.900	-.0021			.0477			.0881
.905			.0169		.0537		
.950				.0370		.0707	
.953			-.0002				
.965	-.0348						

ARC11-716 IA14 O1+T12+S12N25 UPPER WING (RB1U43)

ALPHA0(3) = -.350 C. NO (4) = 4.090

SECTION (1)UPPER WING DEPENDENT VARIABLE CP

Y/BW	.2990	.3640	.4270	.5340	.6730	.7800	.8870
X/CW							
.000	-.1259	-.0109	.2593	.3548	.2787	.2236	.2651
.020				.1610	.0857	.0734	.0152
.025			.1175				
.040		.0736					
.045			.0432				
.050	-.0768			-.0624	-.1034	-.1472	-.2559
.080				-.2195			
.085			-.0857				
.086		.0988					
.094	-.0515						
.150				-.3882	-.4356	-.4674	-.5454
.163		.0000					
.177			-.2661				
.193		-.0521					
.229	.0328						
.250				-.5027	-.6012	-.6843	-.7816
.274			-.3461				
.339		-.3056					
.362	-.0214						
.400				-.4445	-.5795		-.8540
.402			-.4127				
.497	.0000						
.550				-.4188	-.5400		
.565			.0000				
.600							-.2310
.650						-.2120	
.700	-.2246				-.1819		
.725				-.1695			
.750						.0377	-.0049
.760			-.1026				
.775				-.0032	.0185		
.808			-.0370				
.834	-.1560						
.850				.0010	.0433	.0710	
.857			-.0292				
.885	-.0837						
.900	-.0531			.0190			.0816
.905			-.0125		.0515		
.950				.0184		.0653	
.955			-.0161				
.965	-.0673						

ARC11-716 IA14 OI+T12+S12N25 UPPER WING (RB1U43)

ALPHA0(3) = -.340 BETA0 (5) = 8.150

SECTION (1)UPPER WING DEPENDENT VARIABLE CP

Y/BW	.2990	.3640	.4270	.5340	.6730	.7800	.8870
X/CW							
.000	-.2143	-.0459	.0968	.2643	.1873	.1012	.1584
.020				.1624	.0874	.0914	.0249
.025			.0490				
.040		-.0072					
.045			.0206				
.050	-.1346			-.0276	-.0670	-.1010	-.2132
.080				-.1592			
.085			-.0425				
.086		-.0052					
.094	-.1249						
.150				-.3158	-.3667	-.3851	-.4934
.163		.0000					
.177			-.1951				
.193		-.0163					
.229	.0241						
.250				-.4246	-.5099	-.5893	-.7181
.274			-.2828				
.339		-.2607					
.362	-.0235						
.400				-.4258	-.5507		-.7894
.402			-.3743				
.497	.0000						
.550				-.4601	-.5959		
.565			.0000				
.600							-.2204
.650						-.2217	
.700	-.2823				-.2037		
.725				-.2293			
.750						.0415	.0167
.760			-.2451				
.775				-.0628	.0093		
.808			-.0885				
.834	-.2305						
.850				-.0279	.0350	.0722	
.857			-.0870				
[illegible]	-.1405						
.900	-.1037			-.0077			.0873
.905			-.0410		.0410		
.950				-.0089		.0697	
.953			-.0396				
.965	-.0917						

ARC11-716 IA14 O1+T12+S12N25 UPPER WING (RB1U43)

ALPHAO(4) = 4.130 BETAO (1) = -8.090

SECTION (1)UPPER WING DEPENDENT VARIABLE CP

Y/BW	.2990	.3640	.4270	.5340	.6730	.7800	.8870
X/CW							
.000	-.0103	.0521	.4095	.6212	.5855	.5126	.4767
.020				-.1370	-.2249	-.3445	-.4606
.025			-.0445				
.040		.0871					
.045			-.1950				
.050	-.0702			-.4373	-.5401	-.6259	-.7770
.060				-.6712			
.085			-.4148				
.086		.0538					
.094	-.0482						
.150				-.9174	-1.0020	-.9924	-.9779
.163		.0000					
.177			-.6404				
.193		-.2528					
.229	.0291						
.250				-.9898	-1.1800	-1.0640	-1.0060
.274			-.7393				
.339		-.6476					
.362	-.1395						
.400				-.6103	-.7608		-.6294
.402			-.6064				
.497	.0000						
.550				-.1284	-.4043		
.565			.0000				
.600							-.3867
.650						-.4397	
.700	-.0388				-.1674		
.725				-.0361			
.750						-.2489	-.2085
.760			-.0043				
.775				.0695	-.0140		
.808			.0982				
.834	.0411						
.850				.0832	.0715	-.1171	
.857			.0903				
.865	.1469						
.900	.1271			.0939			-.0720
.905			.0881		.1257		
.950				.0854		-.0057	
.953			.0555				
.965	.0483						

ARC11-716 IA14 O1+T12+S12N25 UPPER WING (RB1U43)

ALPHAO(4) = 4.050 BETAO (2) = -4.020

SECTION (1)UPPER WING DEPENDENT VARIABLE CP

Y/BW	.2990	.3640	.4270	.5340	.6730	.7800	.8870
X/CW							
.000	-.0654	.0190	.3734	.5720	.5335	.4602	.4244
.020				-.0871	-.1936	-.3133	-.4432
.025			-.0160				
.040		.0824					
.045			-.1382				
.050	-.0912			-.3695	-.4920	-.5934	-.7419
.080				-.5938			
.085			-.3367				
.086		.0577					
.094	-.0594						
.150				-.8239	-.9328	-.9226	-.9529
.163		.0000					
.177			-.5607				
.193		-.2124					
.229	.0191						
.250				-.8728	-1.0600	-1.1440	-1.0770
.274			-.6682				
.339		-.5947					
.362	-.1239						
.400				-.5896	-.9613		-.7302
.402			-.7074				
.497	.0000						
.550				-.1967	-.2807		
.565			.0000				
.600							-.3737
.650						-.3648	
.700	-.1168				-.1494		
.725				-.0601			
.750						-.1041	-.1597
.760			-.0440				
.775				.0564	.0407		
.808			.0653				
.834	-.0184						
.850				.0676	.0905	.0403	
.857			.0671				
.865	.0889						
.900	.0828			.0773			-.0196
.905			.0619		.1028		
.950				.0718		.0891	
.953			.0383				
.965	.0238						

ARC11-716 IA14 O1+T12+S12N25 UPPER WING (RB1U43)

ALPHAO(4) = 4.050 BETAO (3) = .030

SECTION (1)UPPER WING DEPENDENT VARIABLE CP

Y/BW	.2990	.3640	.4270	.5340	.6730	.7800	.8870
X/CW							
.000	-.1178	-.0318	.3183	.5096	.4706	.3976	.3649
.020				-.0533	-.1767	-.2912	-.4270
.025			.0017				
.040		.0646					
.045			-.1169				
.050	-.1034			-.3230	-.4446	-.5643	-.7126
.080				-.5236			
.085			-.2890				
.086		.0516					
.094	-.0697						
.150				-.7294	-.8538	-.8673	-.9072
.163		.0000					
.177			-.4965				
.193		-.1807					
.229	.0103						
.250				-.7629	-.9094	-1.0460	-1.0860
.274			-.5903				
.339		-.5432					
.362	-.1073						
.400				-.6374	-.9424		-.9876
.402			-.6269				
.497	.0000						
.550				-.3192	-.2975		
.565			.0000				
.600							-.3545
.650						-.1775	
.700	-.1949				-.1614		
.725				-.0997			
.750						.0148	-.0541
.760			-.0972				
.775				.0388	.0403		
.800			.0274				
.834	-.0060						
.850				.0574	.0746	.0996	
.857			.0321				
.865	.0154						
.900	.0281			.0608			.0560
.905			.0284		.0804		
.950				.0481		.1022	
.953			.0190				
.965	-.0070						

ARC11-716 IA14 O1+T12+S12N25 UPPER WING (RB1U43)

ALPHAD(4) = 4.140 BETAD (4) = 4.140

SECTION (1)UPPER WING DEPENDENT VARIABLE CP

Y/BW	.2990	.3640	.4270	.5340	.6730	.7800	.8870
X/CW							
.000	-.2223	-.1259	.2286	.4352	.3994	.3329	.3137
.020				-.0458	-.1650	-.2705	-.4094
.025			-.0186				
.040		.0169					
.045			-.1135				
.050	-.1229			-.2934	-.4148	-.5208	-.6769
.080				-.4622			
.085			-.2592				
.086		.0227					
.094	-.0878						
.150				-.6307	-.7318	-.7988	-.8519
.163		.0000					
.177			-.4322				
.193		-.1611					
.229	-.0066						
.250				-.6870	-.8402	-.9367	-1.0250
.274			-.4838				
.339		-.4646					
.362	-.0975						
.400				-.5805	-.7748		-1.1200
.402			-.5567				
.497	.0000						
.550				-.4435	-.5120		
.565			.0000				
.600							-.3185
.650						-.1694	
.700	-.2745				-.1678		
.725				-.1373			
.750						.0548	.0121
.760			-.1455				
.775				.0051	.0429		
.808			-.0307				
.834	-.1622						
.850				.0231	.0663	.0947	
.857			-.0204				
.865	-.0517						
.900	-.0288			.0341			.0956
.905			-.0087		.0716		
.950				.0341		.0882	
.953			-.0109				
.965	-.0451						

ARC11-716 IA14 O1+T12+S12M25 UPPER WING (RB1U43)

ALPHAO(4) = 4.150 BETAO (5) = 8.190

SECTION (1)UPPER WING DEPENDENT VARIABLE CP

Y/BW	.2990	.3640	.4270	.5340	.6730	.7800	.8870
X/CW							
.000	-.3411	-.1159	.0298	.2564	.3501	.2746	.2773
.020				-.0593	-.1185	-.1981	-.3171
.025			-.0805				
.040		-.0537					
.045			-.1199				
.050	-.2030			-.2277	-.3258	-.4210	-.5787
.080				-.3579			
.085			-.1941				
.086		-.0394					
.094	-.2497						
.150				-.4937	-.6121	-.6678	-.7767
.163		.0000					
.177			-.3206				
.193		-.1504					
.229	.0046						
.250				-.5629	-.7230	-.8326	-.9409
.274			-.4025				
.339		-.3645					
.362	-.0859						
.400				-.5220	-.6690		-1.0800
.402			-.4517				
.497	.0000						
.550				-.4684	-.6273		
.565			.0000				
.600							-.1975
.650						-.1876	
.700	-.2959				-.1953		
.725				-.1800			
.750						.0560	.0391
.760			-.2164				
.775				-.0618	.0235		
.800			-.0915				
.834	-.2007						
.850				-.0234	.0502	.0950	
.857			-.0700				
.865	-.1171						
.900	-.0822			-.0056			.1101
.905			-.0409		.0604		
.950				-.0031		.0903	
.953			-.0331				
.965	-.0798						

ARC11-716 IA14 O1+T12+S12N25 UPPER WING (RB1U43)

ALPHAO(5) = 8.040 BETAO (1) = -8.070

SECTION (1)UPPER WING DEPENDENT VARIABLE CP

Y/BW	.2990	.3640	.4270	.5340	.6730	.7800	.8870
X/CW							
.000	-.0567	-.0143	.4045	.6269	.5270	.3840	.3191
.020				-.3471	-.4837	-.6784	-.8353
.025			-.1768				
.040		.0178					
.045			-.3537				
.050	-.1162			-.6448	-.7952	-.9196	-1.0580
.080				-.8643			
.085			-.5900				
.086		-.0244					
.094	-.0810						
.150				-1.1580	-1.2060	-.9996	-.7804
.163		.0000					
.177			-.7882				
.193		-.3454					
.229	.0070						
.250				-1.1770	-1.1160	-.7379	-.6064
.274			-.8873				
.339		-.7563					
.362	-.1793						
.400				-.7333	-.7183		-.5759
.402			-.7146				
.497	.0000						
.550				-.4009	-.6468		
.565			.0000				
.600							-.5182
.650						-.5726	
.700	-.0485				-.2119		
.725				-.2309			
.750						-.4587	-.4162
.760			-.1176				
.775				-.1330	-.3930		
.808			.0263				
.834	-.0414						
.850				-.0560	-.2823	-.3693	
.857			.0281				
.865	.0623						
.900	.0672			-.0051			-.3414
.905			.0453		-.1779		
.950				.0282		-.2802	
.953			.0382				
.965	.0237						

ARC11-716 IA14 O1+T12+S12N25 UPPER WING (RB1U43)

ALPHAO(5) = 8.010 BETAO (2) = -4.020

SECTION (1)UPPER WING DEPENDENT VARIABLE CP

Y/SW	.2990	.3640	.4270	.5340	.6730	.7800	.8870
X/CW							
.000	-.1281	-.0569	.3615	.5880	.5003	.3539	.2700
.020				-.2844	-.4431	-.6559	-.0389
.025			-.1455				
.040		.0142					
.045			-.2940				
.050	-.1417			-.5305	-.7345	-.8913	-1.0980
.080				-.7910			
.085			-.5233				
.086		-.0132					
.094	-.1000						
.150				-1.0580	-1.1710	-1.0510	-.9812
.163		.0000					
.177			-.7111				
.193		-.3075					
.229	-.0544						
.250				-1.1010	-1.1870	-.8083	-.6718
.274			-.8162				
.339		-.7055					
.362	-.1686						
.400				-.6276	-.7093		-.6124
.402			-.8972				
.497	.0000						
.550				-.2716	-.6251		
.565			.0000				
.600							-.5320
.650						-.5830	
.700	-.1119				-.1890		
.725				-.1755			
.750						-.4597	-.4193
.760			-.1127				
.775				-.0751	-.3129		
.800			-.0019				
.834	-.0661						
.850				-.0173	-.1749	-.3322	
.857			.0096				
.865	.0392						
.900	.0479			.0246			-.3152
.905			.0201		-.0518		
.950				.0335		-.2242	
.955			.0211				
.965	.0154						

ARC11-716 IA14 O:+T12+S12N25 UPPER WING (RB1U43)

ALPHAD(5) = 8.010 BETAO (3) = .030

SECTION (1)UPPER WING DEPENDENT VARIABLE CP

Y/BW	.2990	.3640	.4270	.5340	.6730	.7800	.8870
X/CW							
.000	-.2041	-.1317	.2809	.5155	.4550	.3168	.2276
.020				-.2387	-.4126	-.6376	-.8270
.025			-.1364				
.040		-.0094					
.045			-.2649				
.050	-.1533			-.5198	-.7151	-.8674	-1.0880
.080				-.7260			
.085			-.4422				
.086		-.0164					
.093	-.1125						
.150				-.9347	-1.1150	-1.1310	-1.1210
.163		.0000					
.177			-.6391				
.193		-.2762					
.229	-.0110						
.250				-.9806	-1.2480	-.9454	-.7934
.274			-.7307				
.339		-.6470					
.362	-.1557						
.400				-.7539	-.7290		-.3608
.402			-.8352				
.497	.0000						
.550				-.2675	-.5593		
.565			.0000				
.600							-.5278
.650						-.5785	
.700	-.1940				-.1731		
.725				-.1636			
.750						-.4134	-.3759
.760			-.1185				
.775				-.0553	-.1650		
.808			-.0128				
.834	-.1060						
.850				.0012	-.0513	-.2689	
.857			-.0083				
.865	.0056						
.900	.0190			.0186			-.2532
.905			.0119		.0542		
.950				.0392		-.1259	
.953			.0113				
.965	-.0071						

ARC11-716 IA14 O1+T12+S12N25 UPPER WING (RB1U43)

ALPHAO(5) = 9.000 BETAO (4) = 4.130

SECTION (1)UPPER WING DEPENDENT VARIABLE CP

Y/BW	.2990	.3640	.4270	.5340	.6730	.7800	.8870
X/CW							
.000	-.3385	-.2764	.1748	.4220	.3939	.2817	.1884
.020				-.2319	-.3830	-.5965	-.8080
.025			-.1376				
.040		-.0528					
.045			-.2623				
.050	-.1854			-.4812	-.6732	-.8204	-1.0530
.080				-.6727			
.085			-.4012				
.086		-.0435					
.094	-.1403						
.150				-.8467	-1.0280	-1.10[illegible]	-1.1830
.163		.0000					
.177			-.5732				
.193		-.2437					
.229	-.0455						
.250				-.8655	-1.0950	-1.1790	-1.1130
.274			-.6553				
.339		-.5681					
.362	-.1579						
.400				-.7647	-1.1000		-.7592
.402			-.6967				
.497	.0000						
.550				-.3450	-.3933		
.565			.0000				
.600							-.5448
.650						-.4477	
.700	-.2772				-.1729		
.725				-.1358			
.750						-.2139	-.3710
.760			-.1534				
.775				-.0302	-.0447		
.808			-.0380				
.834	-.1282						
.850				.0072	.0136	-.0671	
.857			-.0261				
.865	-.0180						
.900	-.0081			.0303			-.2684
.905			-.0080		.0699		
.950				.0392		.0277	
.953			-.0096				
.965	-.0319						

ARC11-716 IA14-01-T12+S12N25 UPPER WING (RB1U43)

ALPHAO(5) = 8.090 BETAO (5) = 8.250

SECTION (1)UPPER WING DEPENDENT VARIABLE CP

Y/BW	.2990	.3640	.4270	.5340	.6730	.7800	.8870
X/CW							
.000	-.4992	-.1960	-.1269	.2279	.3596	.2444	.1608
.020				-.3077	-.3548	-.5360	-.7667
.025			-.2156				
.040		-.1126					
.045			-.2427				
.050	-.2671			-.4481	-.6169	-.7525	-.9902
.080				-.5867			
.085			-.3080				
.086		-.1141					
.094	-.2573						
.150				-.6857	-.9181	-.9739	-1.1010
.163		.0000					
.177			-.4190				
.193		-.2434					
.229	-.1102						
.250				-.7268	-.9129	-1.0980	-1.2090
.274			-.4952				
.339		-.4792					
.362	-.1352						
.400				-.5898	-.7977		-1.0590
.402			-.5045				
.497	.0000						
.550				-.4398	-.4930		
.565			.0000				
.600							-.4688
.650						-.1837	
.700	-.3070				-.1952		
.725				-.1684			
.750						.0119	-.1428
.760			-.2001				
.775				-.0690	.0062		
.808			-.0997				
.834	-.1804						
.850				-.0239	.0467	.0655	
.857			-.0747				
.865	-.1118						
.900	-.0793			-.0114			.0377
.905			-.0522		.0646		
.950				-.0045		.0926	
.955			-.0444				
.965	-.0743						

ARC11-715 IA14 01+T12+S12N25 UPPER WING (RB1U44) (15 FEB 74)

REFERENCE DATA

SREF =	2.4210	SQ.FT.	XMRP =	29.5800	INCHES
LREF =	38.7090	INCHES	YMRP =	.0000	INCHES
BREF =	38.7090	INCHES	ZMRP =	.0000	INCHES
SCALE =	.0300	SCALE			

PARAMETRIC DATA

MACH =	.900	ELEVON =	.000
RUDDER =	.000	SPOBRK =	.000

ALPHAO(1) = -7.970 BETAO (1) = -8.090

SECTION (1)UPPER WING DEPENDENT VARIABLE CP

X/CW \ Y/BW	.2990	.3640	.4270	.5340	.6730	.7800	.8870
.000	.0561	.0841	.3184	.3623	.2607	.1507	.2001
.020				.5257	.4956	.5142	.4866
.025			.4232				
.040		.2428					
.045			.3559				
.050	.0921			.3093	.3218	.3242	.2770
.080				.1378			
.085			.2218				
.086		.3008					
.094	.0963						
.150				-.0928	-.0709	-.0419	-.0855
.163		.0000					
.177			-.0189				
.193		.1700					
.229	.1749						
.250				-.2287	-.2700	-.3037	-.3904
.274			-.1352				
.339		-.1067					
.362	.1546						
.400				-.1679	-.2074		-.4952
.402			-.1550				
.497	.0000						
.550				-.1065	-.2048		
.565			.0000				
.600							-.2412
.650						-.1612	
.700	.0725				-.1895		
.725				-.0480			
.750						.1163	.0461
.760			-.0520				
.775				.1422	.1190		
.800			.1317				
.834	.0238						
.850				.0983	.1145	.1254	
.857			.0958				
.865	.1476						
.900	.1077			.0881			.0954
.905			.0688		.0610		

DATE 10 JAN 75 TABULATED PRESSURE DATA - IA14A - VOL. 6

ARC11-716 IA14 O1+T12+S12N25 UPPER WING (RB1U44)

ALPHAO(1) = -7.970 BETAO (1) = -8.050

SECTION (1)UPPER WING DEPENDENT VARIABLE CP

Y/BW	.2990	.3640	.4270	.5340	.6730	.7800	.8870
X/CW							
.950				.0254		.0923	
.953			.0044				
.965	-.0075						

ALPHAO(1) = -7.960 BETAO (2) = -4.000

SECTION (1)UPPER WI DEPENDENT VARIABLE CP

Y/BW	.2990	.3640	.4270	.5340	.6730	.7800	.8870
X/CW							
.000	.0259	.0353	.2346	.2594	.1271	.0046	.0524
.020				.5122	.4571	.4734	.4342
.025			.3980				
.040		.1959					
.045			.3478				
.050	.0687			.3170	.3194	.3167	.2595
.080				.1688			
.085			.2268				
.086		.2738					
.094	.0753						
.150				-.0509	-.0414	-.0203	-.0772
.163		.0000					
.177			.0159				
.193		.1836					
.229	.1556						
.250				-.2016	-.2327	-.2684	-.3638
.274			-.1048				
.339		-.0824					
.362	.1583						
.400				-.1861	-.2902		-.4871
.402			-.1653				
.497	.0000						
.550				-.1687	-.2811		
.565			.0000				
.600							-.2298
.650						-.1944	
.700	.0051				-.1792		
.725				-.1094			
.750						.0850	.0251
.760			-.1167				
.775				.0905	.0798		
.808			.0779				
.834	-.0541						
.850				.0556	.0770	.0958	

ARC11-716 IA14 O1+T12+S12N25 UPPER WING (RB1U44)

ALPHAO(1) = -7.960 BETAO (2) = -4.000

SECTION (1)UPPER WING DEPENDENT VARIABLE CP

X/CW \ Y/BW	.2990	.3640	.4270	.5340	.6730	.7800	.8870
.857			.0438				
.865	.0781						
.900	.0455			.0501			.0697
.905			.0252		.0350		
.950				-.0022		.0616	
.953			-.0282				
.965	-.0471						

ALPHAO(1) = -7.960 BETAO (3) = .050

SECTION (1)UPPER WING DEPENDENT VARIABLE CP

X/CW \ Y/BW	.2990	.3640	.4270	.5340	.6730	.7800	.8870
.000	.0224	.0235	.1760	.1477	.0030	-.1395	-.0850
.020				.4731	.4097	.4205	.3688
.025			.3584				
.040		.1581					
.045			.3237				
.050	.0519			.3159	.3104	.2957	.2324
.080				.1868			
.085			.2363				
.086		.2418					
.094	.0581						
.150				-.0174	-.0138	-.0056	-.0792
.163		.0000					
.177			.0404				
.193		.1807					
.229	.1386						
.250				-.1637	-.2004	-.2391	-.3462
.274			-.0726				
.339		-.0580					
.362	.1567						
.400				-.1954	-.2915		-.4901
.402			-.1681				
.497	.0000						
.550				-.2240	-.3525		
.565			.0000				
.600							-.3311
.650						-.3160	
.700	-.0618				-.1954		
.725				-.1755			
.750						.0695	.0222
.760			-.1908				

ARC11-716 IA14 O1+T12+S12N25 UPPER WING (RB1U44)

ALPHAO(1) = -7.960 BETAO (3) = .050

SECTION (1)UPPER WING DEPENDENT VARIABLE CP

Y/BW	.2990	.3640	.4270	.5340	.6730	.7800	.8870
X/CW							
.775				.0340	.0407		
.808			.0129				
.834	-.1311						
.850				.0114	.0435	.0647	
.857			-.0110				
.865	.0002						
.900	-.0148			.0084			.0487
.905			-.0181		-.0004		
.950				-.0299		.0265	
.953			-.0548				
.965	-.0784						

ALPHAO(1) = -7.970 BETAO (4) = 4.100

SECTION (1)UPPER WING DEPENDENT VARIABLE CP

Y/BW	.2990	.3640	.4270	.5340	.6730	.7800	.8870
X/CW							
.000	-.0139	.0391	.1410	.0736	-.1238	-.2632	-.2203
.020				.4575	.3587	.3599	.2997
.025			.3274				
.040		.1308					
.045			.3043				
.050	.0350			.3150	.2893	.2611	.1930
.080				.2013			
.085			.2381				
.086		.2089					
.094	.0538						
.150				.0101	-.0036	-.0063	-.0895
.163		.0000					
.177			.0618				
.193		.1738					
.229	.1243						
.250				-.1439	-.1848	-.2254	-.3393
.274			-.0511				
.339		-.0379					
.362	.1392						
.400				-.1983	-.2963		-.4925
.402			-.1694				
.497	.0000						
.550				-.2743	-.3851		
.565			.0000				
.600							-.5432
.650						-.5151	

ARC11-716 IA14 O1+T12+S12N25 UPPER WING (RB1U44)

ALPHAO(11) = -7.970 BETAO (4) = 4.100

SECTION (1)UPPER WING DEPENDENT VARIABLE CP

X/CW \ Y/BW	.2990	.3640	.4270	.5340	.6730	.7800	.8870
.700	-.1189				-.2268		
.725				-.3416			
.750						-.0326	-.0307
.760			-.3213				
.775				-.0360	-.0044		
.808			-.0542				
.834	-.2252						
.850				-.0349	.0219	.0434	
.857			-.0628				
.865	-.0996						
.900	-.0830			-.0198			.0134
.905			-.0588		-.0246		
.950				-.0449		.0007	
.953			-.0807				
.965	-.1094						

ALPHAO(1) = -8.000 BETAO (5) = 8.170

SECTION (1)UPPER WING DEPENDENT VARIABLE CP

X/CW \ Y/BW	.2990	.3640	.4270	.5340	.6730	.7800	.8870
.000	-.1125	-.0171	.1177	.0201	-.2132	-.3844	-.3471
.020				.4161	.3181	.3014	.2256
.025			.2740				
.040		.0952					
.045			.2595				
.050	-.0186			.2970	.2743	.2361	.1549
.060				.2009			
.085			.2120				
.086		.1752					
.094	.0223						
.150				.0282	.0186	.0060	-.0959
.163		.0000					
.177			.0662				
.193		.1429					
.229	.1001						
.250				-.1174	-.1585	-.2067	-.3348
.274			-.0351				
.339		-.0398					
.362	.1013						
.400				-.2006	-.2078		-.3002
.402			-.1640				
.497	.0000						

ARC11-716 IA14 O1+T12+S12N25 UPPER WING (RB1U44)

ALPHAO(1) = -8.000 BETAO (5) = 8.170

SECTION (1)UPPER WING DEPENDENT VARIABLE CP

X/CW \ Y/BW	.2990	.3640	.4270	.5340	.6730	.7800	.8870
.550				-.3022	-.3975		
.565			.0000				
.600							-.8220
.650						-.5500	
.700	-.1763				-.2611		
.725				-.3952			
.750						-.3088	-.1840
.760			-.3697				
.775				-.2023	-.2402		
.808			-.1775				
.834	-.3067						
.850				-.1059	-.0707	-.0484	
.857			-.1512				
.865	-.2068						
.900	-.1556			-.0694			-.0147
.905			-.1114		-.0099		
.950				-.0562		-.0034	
.953			-.1015				
.965	-.1421						

ALPHAO(2) = -4.070 BETAO (1) = -8.080

SECTION (1)UPPER WING DEPENDENT VARIABLE CP

X/CW \ Y/BW	.2990	.3640	.4270	.5340	.6730	.7800	.8870
.000	.0673	.1549	.4234	.5200	.4500	.3885	.4222
.020				.3721	.3395	.3539	.3353
.025			.3166				
.040		.2355					
.045			.2164				
.050	.0539			.1030	.0888	.0968	.0376
.080				-.0954			
.085			.0361				
.086		.2472					
.094	.0611						
.150				-.3839	-.3304	-.3110	-.3209
.163		.0000					
.177			-.2178				
.193		.0442					
.229	.1303						
.250				-.4654	-.5386	-.5694	-.6053
.274			-.3220				
.339		-.2763					

ARC11-716 IA14 01+T12+S12N25 UPPER WING (RB1U44)

ALPHAO(2) = -4.070 BETAO (1) = -8.080

SECTION (1)UPPER WING DEPENDENT VARIABLE CP

Y/BW	.2990	.3640	.4270	.5340	.6730	.7800	.8870
X/CW							
.362	.0623						
.400				-.2829	-.4231		-.8324
.402			-.3044				
.497	.0000						
.550				-.1711	-.2984		
.565			.0000				
.600							-.1029
.650						-.1188	
.700	.0223				-.2004		
.725				-.0458			
.750						.1239	.0461
.760			-.0514				
.775				.1377	.1215		
.808			.1236				
.834	.0089						
.850				.0959	.1131	.1235	
.857			.0936				
.865	.1373						
.900	.1032			.0816			.0894
.905			.0667		.0517		
.950				.0215		.0707	
.953			.0072				
.965	-.0007						

ALPHAO(2) = -3.970 BETAO (2) = -4.030

SECTION (1)UPPER WING DEPENDENT VARIABLE CP

Y/BW	.2990	.3640	.4270	.5340	.6730	.7800	.8870
X/CW							
.000	.0364	.1135	.3617	.4213	.3330	.2566	.3045
.020				.3800	.3265	.3392	.3124
.025			.3143				
.040		.2062					
.045			.2277				
.050	.0343			.1349	.1222	.1112	.0467
.080				-.0490			
.085			.0804				
.086		.2324					
.094	.0451						
.150				-.2694	-.2785	-.2643	-.3078
.163		.0000					
.177			-.1609				
.193		.0646					

ARC11-716 IA14 O1+T12+S12N25 UPPER WING (RB1U44)

ALPHAO(2) = -3.970 BETAO (2) = -4.030

SECTION (1)UPPER WING DEPENDENT VARIABLE CP

X/CW \ Y/BW	.2990	.3640	.4270	.5340	.6730	.7800	.8870
.229	.1176						
.250				-.4167	-.4872	-.5259	-.5871
.274			-.2746				
.339		-.2387					
.362	.0700						
.400				-.3024	-.4351		-.7468
.402			-.3171				
.497	.0000						
.550				-.2567	-.4199		
.565			.0000				
.600							-.2314
.650						-.1871	
.700	-.0494				-.1998		
.725				-.1204			
.750						.1189	.0579
.760			-.1312				
.775				.0843	.0908		
.808			.0661				
.834	-.0705						
.850				.0524	.0821	.1031	
.857			.0484				
.865	.0613						
.900	.0425			.0473			.0809
.905			.0294		.0313		
.950				-.0000		.0491	
.953			-.0226				
.965	-.0367						

ALPHAO(2) = -3.080 BETAO (3) = .030

SECTION (1)UPPER WING DEPENDENT VARIABLE CP

X/CW \ Y/BW	.2990	.3640	.4270	.5340	.6730	.7800	.8870
.000	.0186	.0911	.3035	.3287	.2167	.1233	.1850
.020				.3705	.3034	.3241	.2845
.025			.2933				
.040		.1722					
.045			.2239				
.050	.0259			.1497	.1369	.1295	.0540
.080				-.0016			
.085			.0972				
.086		.2089					
.094	.0317						

ARC11-716 IA14 D1+T12+S12N25 UPPER WING (R81U44)

ALPHAO(2) = -3.880 BETAO (3) = .030

SECTION (1)UPPER WING DEPENDENT VARIABLE CP

Y/BW	.2990	.3640	.4270	.5340	.6730	.7800	.8870
X/CW							
.150				-.2054	-.2132	-.2055	-.2864
.163		.0000					
.177			-.1213				
.193		.0761					
.229	.1041						
.250				-.3493	-.4060	-.4522	-.5496
.274			-.2208				
.339		-.1929					
.362	.0796						
.400				-.3059	-.4239		-.6560
.402			-.2919				
.497	.0000						
.550				-.3093	-.4526		
.565			.0000				
.600							-.6090
.650						-.5647	
.700	-.1153				-.2228		
.725				-.2803			
.750						.0866	.0399
.760			-.2596				
.775				.0309	.0649		
.808			-.0029				
.834	-.1920						
.850				.0177	.0662	.0966	
.857			-.0143				
.865	-.0486						
.900	-.0367			.0170			.0796
.905			-.0190		.0163		
.950				-.0232		.0429	
.953			-.0532				
.965	-.0813						

ALPHAO(2) = -3.920 BETAO (4) = 4.080

SECTION (1)UPPER WING DEPENDENT VARIABLE CP

Y/BW	.2990	.3640	.4270	.5340	.6730	.7800	.8870
X/CW							
.000	-.0485	.0615	.2514	.2419	.1076	.0051	.0758
.020				.3448	.2709	.2886	.2443
.025			.2548				
.040		.1322					
.045			.2019				
.050	-.0915			.1569	.1338	.1193	.0438

ARC11-716 IA14 01+T12+S12N25 UPPER WING (RB1U44)

ALPHA0(2) = -3.920 BETA0 (4) = 4.080

SECTION (1)UPPER WING DEPENDENT VARIABLE CP

X/CW \ Y/BW	.2990	.3640	.4270	.5340	.6730	.7800	.8870
.080				.0222			
.085			.1025				
.086		.1746					
.094	.0208						
.150				-.1630	-.1845	-.1871	-.2674
.163		.0000					
.177			-.0850				
.193		.0783					
.229	.0898						
.250				-.3022	-.3522	-.4109	-.5281
.274			-.1803				
.339		-.1507					
.362	.0745						
.400				-.2978	-.4141		-.6403
.402			-.2735				
.497	.0000						
.550				-.3397	-.4695		
.565			.0000				
.600							-.6414
.650						-.6016	
.700	-.1615				-.2520		
.725				-.4177			
.750						-.1739	-.1539
.760			-.3890				
.775				-.1887	-.1300		
.808			-.1281				
.834	-.3236						
.850				-.0619	-.0203	.0065	
.857			-.0940				
.865	-.1886						
.900	-.1258			-.0330			.0248
.905			-.0755		-.0262		
.950				-.0417		.0034	
.953			-.0707				
.965	-.1023						

ARC11-716 IA14 O1+T12+S12N25 UPPER WING (RB1U44)

ALPHAO(2) = -3.930 BETAO (5) = 8.150

SECTION (1)UPPER WING DEPENDENT VARIABLE CP

Y/BW	.2990	.3640	.4270	.5340	.6730	.7800	.8870
X/CW							
.000	-.1773	.0103	.1186	.1928	.0128	-.1089	-.0495
.020				.3265	.2476	.2574	.2043
.025			.2293				
.040		.0314					
.045			.1944				
.050	-.0627			.1629	.1446	.1200	.0421
.080				.0418			
.085			.1046				
.086		.1411					
.094	-.0214						
.150				-.1254	-.1495	-.1469	-.2453
.163		.0000					
.177			-.0516				
.193		.0741					
.229	.0733						
.250				-.2558	-.3033	-.3557	-.4936
.274			-.1402				
.339		-.1196					
.362	.0627						
.400				-.2880	-.3889		-.6164
.402			-.2502				
.497	.0000						
.550				-.3577	-.4723		
.565			.0000				
.600							-.6637
.650						-.6175	
.700	-.1998				-.2783		
.725				-.4552			
.750						-.3743	-.2071
.760			-.4047				
.775				-.3630	-.3908		
.808			-.2788				
.834	-.3495						
.850				-.1261	-.0995	-.1020	
.857			-.1955				
.865	-.3135						
.900	-.2185			-.0709			-.0373
.905			-.1247		-.0128		
.950				-.0493		-.0103	
.953			-.0979				
.965	-.1505						

ARC11-716 IA14 O1+T12+S12N25 UPPER WING (RB1U44)

ALPHAO(3) = .060 BETAO (1) = -8.080

SECTION (1)UPPER WING DEPENDENT VARIABLE CP

Y/BW	.2990	.3640	.4270	.5340	.6730	.7600	.8870
X/CW							
.000	.0364	.1516	.4664	.6301	.5982	.5543	.5635
.020				.1753	.1122	.0731	.0287
.025			.1786				
.040		.1940					
.045			.0556				
.050	.0028			-.1173	-.1745	-.2189	-.3113
.080				-.3356			
.085			-.1447				
.086		.1749					
.094	.0171						
.150				-.5981	-.6388	-.6168	-.5969
.163		.0000					
.177			-.3940				
.193		-.0788					
.229	.0913						
.250				-.6729	-.8034	-.8473	-.8323
.274			-.5146				
.339		-.4550					
.362	-.0192						
.400				-.7201	-.9479		-1.[illegible]
.402			-.6406				
.497	.0000						
.550				-.1931	-.2371		
.5[illegible]5			.0000				
.600							-.4274
.650						-.2330	
.700	-.0262				-.1914		
.725				-.0252			
.750						.1175	-.0713
.760			-.0219				
.775				.1299	.1117		
.808			.1265				
.834	.0212						
.850				.1018	.1167	.1522	
.857			.1036				
.865	.1428						
.900	.1178			.0886			.0692
.905			.0779		.0668		
.950				.0430		.0978	
.955			.0149				
.965	.0169						

ARC11-716 IA14 O'+T12+S12N25 UPPER WING (NB1U44)

ALPHAD(3) = -.320 BETAD (2) = -4.030

SECTION (1)UPPER WING DEPENDENT VARIABLE CP

Y/BW	.2990	.3640	.4270	.5340	.6730	.7800	.8870
X/CW							
.000	.0090	.1174	.4137	.5498	.5035	.4590	.4812
.020				.1990	.1330	.1070	.0581
.025			.1874				
.040		.1746					
.045			.0799				
.050	-.3110			-.3745	-.1394	-.1673	-.2619
.080				-.2729			
.085			-.0940				
.086		.1727					
.094	.0027						
.150				.5054	-.5513	-.5434	-.5515
.163		.6000					
.177			-.3351				
.193		-.0524					
.229	.0804						
.250				-.6048	-.6760	-.7625	-.7905
.274			-.4375				
.339		-.4184					
.362	-.0098						
.400				-.5818	-.8463		-1.0050
.402			-.5388				
.447	.0000						
.550				-.3071	-.4837		
.560			.0000				
.600							-.4123
.650						-.1583	
.700	-.1036				-.2017		
.725				-.0944			
.750						.1471	.0902
.769			-.0995				
.775				.0923	.1129		
.808			.0729				
.834	-.0713						
.850				.0711	.1021	.1318	
.857			.0542				
.865	.0611						
.900	.0538			.0588			.1066
.900			.0398		.0397		
.950				.0094		.0655	
.953			-.0116				
.965	-.0201						

ARC11-716 IA14 O1+T12+S12N25 UPPER WING (RB1U44)

ALPHAO(3) = -.320 BETAO (3) = .050

SECTION (1)UPPER WING DEPENDENT VARIABLE CP

X/CW \ Y/BW	.2990	.3640	.4270	.5340	.6730	.7800	.8870
.000	-.0358	.0706	.3507	.4657	.4017	.3575	.3887
.020				.1950	.1275	.1089	.0614
.025			.1693				
.040		.1433					
.045			.0797				
.050	-.0305			-.0498	-.0992	-.1363	-.2319
.080				-.2367			
.085			-.0703				
.086		.1501					
.094	-.0128						
.150				-.4218	-.4714	-.4678	-.5240
.163		.0000					
.177			-.2940				
.193		-.0376					
.229	.0663						
.250				-.5385	-.6383	-.6937	-.7562
.274			-.3667				
.339		-.3591					
.362	-.0008						
.400				-.4775	-.6280		-.9669
.402			-.4732				
.497	.0000						
.550				-.3587	-.5221		
.565			.0000				
.600							-.6393
.650						-.6089	
.700	-.1582				-.2199		
.725				-.3394			
.750						.1024	.0769
.760			-.2189				
.775				.0166	.0691		
.808			-.0080				
.834	-.2656						
.850				.0343	.0841	.1139	
.857			-.0021				
.8[illegible]	-.0901						
.[illegible]	-.0342			.0303			.1009
.[illegible]			-.0054		.0267		
.920				-.0048		.0504	
.952			-.0336				
.965	-.09[illegible]						

ARC11-716 IA14 OI+T12+S12N25 UPPER WING (RB1U44)

ALPHAO(3) = -.330 BETAO (4) = 4.100

SECTION (1)UPPER WING DEPENDENT VARIABLE CP

Y/BW	.2990	.3640	.4270	.5340	.6730	.7800	.8870
X/CW							
.000	-.1195	.0105	.2795	.3862	.3080	.2514	.2935
.020				.1908	.1139	.1110	.0516
.025			.1412				
.040		.0960					
.045			.0686				
.050	-.0511			-.0299	-.0700	-.1084	-.2103
.080				-.1961			
.085			-.0526				
.086		.1181					
.094	-.0247						
.150				-.3624	-.4019	-.4260	-.4882
.163		.0000					
.177			-.2391				
.193		-.0183					
.229	.0572						
.250				-.4730	-.5709	-.6349	-.7256
.274			-.3233				
.339		-.2801					
.362	.0075						
.400				-.4122	-.5194		-.8770
.402			-.3933				
.497	.0000						
.550				-.3810	-.5342		
.565			.0000				
.600							-.6915
.650						-.6467	
.700	-.1963				-.2713		
.725				-.4424			
.750						-.2310	-.1737
.760			-.3891				
.775				-.3331	-.2759		
.808			-.2260				
.834	-.3443						
.850				-.0854	-.0843	-.0648	
.857			-.1221				
.865	-.2790						
.900	-.1769			-.0477			.0150
.905			-.0649		-.0226		
.950				-.0346		-.0286	
.955			-.0462				
.965	-.1003						

ARC11-716 IA14 O1+T12+S12N25 UPPER WING (RB1U44)

ALPHA0(3) = -.330 BETA0 (5) = 8.150

SECTION (1)UPPER WING DEPENDENT VARIABLE CP

Y/BW	.2990	.3640	.4270	.5340	.6730	.7800	.8870
X/CW							
.000	-.2847	-.0318	.1029	.2836	.2185	.1397	.1881
.020				.1864	.1162	.1258	.0670
.025			.0619				
.040		.0045					
.045			.0365				
.050	-.1446			.0041	-.0324	-.0593	-.1608
.080				-.1214			
.085			-.0174				
.086		.0017					
.094	-.1004						
.150				-.2742	-.3245	-.3506	-.4368
.163		.0000					
.177			-.1555				
.193		.0096					
.229	.0523						
.250				-.3834	-.4688	-.5397	-.6586
.274			-.2406				
.339		-.2229					
.362	.0083						
.400				-.3728	-.4837		-.7264
.402			-.3200				
.497	.0000						
.550				-.3950	-.5296		
.565			.0000				
.600							-.6957
.650						-.6562	
.700	-.2292				-.2864		
.725				-.4553			
.750						-.3217	-.2141
.760			-.4227				
.775				-.3828	-.3533		
.808			-.4146				
.834	-.3813						
.850				-.1478	-.1127	-.1112	
.857			-.2277				
.865	-.4097						
.900	-.3165			-.0871			-.0312
.905			-.1313		-.0220		
.950				-.0513		-.0172	
.953			-.0883				
.965	-.1720						

ARC11-716 IA14 D1+T12+S12N25 UPPER WING (RB1U44)

ALPHAO(4) = 4.200 BETAO (1) = -8.100

SECTION (1)UPPER WING DEPENDENT VARIABLE CP

Y/BW	.2990	.3640	.4270	.5340	.6730	.7800	.8870
X/CW							
.000	-.0312	.0640	.4361	.6530	.6167	.5477	.5113
.020				-.0646	-.1425	-.2518	-.3606
.025			.0014				
.040		.1082					
.045			-.1372				
.050	-.0699			-.3550	-.4531	-.5258	-.6595
.080				-.5727			
.085			-.3611				
.086		.0820					
.094	-.0430						
.150				-.8350	-.8948	-.8814	-.8750
.163		.0000					
.177			-.5688				
.193		-.2034					
.229	.0495						
.250				-.9116	-1.0630	-.9510	-.9114
.274			-.6817				
.339		-.5857					
.362	-.0918						
.400				-.9672	-.9126		-.6575
.402			-.8459				
.497	.0000						
.550				-.2347	-.5817		
.565			.0000				
.600							-.4954
.650						-.5090	
.700	-.1069				-.2333		
.725				-.1092			
.750						-.4127	-.4514
.760			-.0476				
.775				-.0093	-.2472		
.808			.0788				
.834	.0061						
.850				.0207	-.1285	-.3260	
.857			.0602				
.865	.1270						
.900	.0937			.0313			-.3921
.905			.0527		-.0189		
.950				.0068		-.2100	
.953			.0138				
.965	.0111						

ARC11-716 IA14 D1+T12+S12N25 UPPER WING (RB1U44)

ALPHAD(4) = 4.190 BETAD (2) = -4.020

SECTION (1)UPPER WING DEPENDENT VARIABLE CP

Y/BW	.2990	.3640	.4270	.5340	.6730	.7800	.8870
X/CW							
.000	-.0674	.0298	.3938	.5979	.5617	.4906	.4576
.020				-.0314	-.1189	-.2335	-.3562
.025			.0249				
.040		.1000					
.045			-.1023				
.050	-.0703			-.3079	-.4104	-.5008	-.6404
.080				-.5215			
.085			-.2982				
.086		.0329					
.094	-.0464						
.150				-.7416	-.8293	-.8265	-.8607
.163		.0000					
.177			-.5114				
.193		-.1717					
.229	.0451						
.250				-.8233	-.9781	-1.0360	-.9735
.274			-.6175				
.339		-.5437					
.362	-.0794						
.400				-.9007	-1.0700		-.7172
.402			-.7832				
.497	.0000						
.550				-.3324	-.4677		
.565			.0000				
.600							-.5486
.650						-.5965	
.700	-.1672				-.2048		
.725				.1235			
.750						-.4392	-.4576
.760			-.073.				
.775				.0232	-.1187		
.806			.0572				
.834	-.0586						
.850				.0406	-.0488	-.2736	
.857			.0409				
.865	.0739						
.900	.0561			.0370			-.2328
.905			.0256		.0404		
.950				.0169		-.1464	
.953			-.0007				
.965	-.0049						

ARC11-716 IA14 O1+T12+S12N25 UPPER WING (RB1U44)

ALPHAO(4) = 4.060 BETAO (3) = .040

SECTION (1)UPPER WING DEPENDENT VARIABLE CP

X/CW \ Y/BW	.2990	.3640	.4270	.5340	.6730	.7800	.8870
.000	-.1270	-.0205	.3433	.5370	.4930	.4234	.3973
.020				-.0014	-.1093	-.2222	-.3520
.025			.0349				
.040		.0867					
.045			-.0699				
.050	-.0875			-.2613	-.3806	-.4739	-.6190
.080				-.4622			
.085			-.2278				
.086		.0837					
.094	-.0500						
.150				-.6691	-.7838	-.7773	-.8227
.163		.0000					
.177			-.4421				
.193		-.1444					
.229	.0433						
.250				-.7421	-.8849	-.9790	-.9956
.274			-.5459				
.339		-.4909					
.362	-.0644						
.400				-.8016	-.9863		-.9052
.402			-.6981				
.497	.0000						
.550				-.4054	-.5212		
.565			.0000				
.600							-.6134
.650						-.5189	
.700	-.2202				-.1957		
.725				-.2082			
.750						-.3348	-.4576
.760			-.2780				
.775				.0115	-.0424		
.808			-.0580				
.814	-.2629						
.850				.0215	.0145	-.1307	
.857			-.0005				
.865	-.1159						
.900	-.0485			.0266			-.3135
.905			.0020		.0202		
.950				.0016		-.0243	
.953			-.0322				
.965	-.0447						

ARC11-716 IA14 D1+T12+S12N25 UPPER WING (RB1U44)

ALPHAD(4) = 4.100 BETAD (4) = 4.110

SECTION (1)UPPER WING DEPENDENT VARIABLE CP

Y/BW	.2990	.3640	.4270	.5340	.6730	.7800	.8870
X/CW							
.000	-.2258	-.1144	.2425	.4556	.4194	.3562	.3423
.020				-.0032	-.1135	-.2122	-.3354
.025			.0032				
.040		.0377					
.045			-.0773				
.050	-.1144			-.2471	-.3648	-.4531	-.5940
.080				-.4116			
.085			-.2122				
.086		.0445					
.094	-.0716						
.150				-.6057	-.6938	-.7380	-.7856
.163		.0000					
.177			-.3938				
.193		-.1226					
.229	.0159						
.250				-.6607	-.7763	-.8890	-.9626
.274			-.4922				
.339		-.4287					
.362	-.0603						
.400				-.6232	-.8433		-1.1210
.402			-.5614				
.497	.0000						
.550				-.4418	-.6044		
.565			.0000				
.600							-.6488
.650						-.5223	
.700	-.2613				-.2523		
.725				-.4061			
.750						-.0740	-.3467
.760			-.3152				
.775				-.2361	-.0636		
.808			-.1925				
.834	-.3395						
.850				-.0617	.0027	.0080	
.857			-.0906				
.865	-.3069						
.900	-.1360			-.0324			-.1824
.905			-.0587		-.0075		
.950				-.0205		.0018	
.953			-.0483				
.965	-.0752						

ARC11-716 IA14 O1+T12+S12N25 UPPER WING (RB1U44)

ALPHAO(4) = 4.100 BETAO (5) = 8.190

SECTION (1)UPPER WING DEPENDENT VARIABLE CP

Y/BW	.2990	.3640	.4270	.5340	.6730	.7800	.8870
X/CW							
.000	-.3657	-.0968	.0378	.2462	.3731	.3027	.3078
.020				-.0421	-.0623	-.1374	-.2664
.025			-.0567				
.040		-.0348					
.045			-.0899				
.050	-.2054			-.2010	-.2789	-.3598	-.4936
.080				-.3118			
.085			-.1606				
.086		-.0222					
.094	-.2480						
.150				-.4460	-.5646	-.6217	-.6928
.163		.0000					
.177			-.2770				
.193		-.1168					
.229	.0286						
.250				-.5206	-.6726	-.7644	-.8620
.274			-.3616				
.339		-.3310					
.362	-.0542						
.400				-.4602	-.6352		-1.0220
.402			-.4140				
.497	.0000						
.550				-.4473	-.6010		
.565			.0000				
.600							-.6722
.650						-.6938	
.700	-.2695				-.2827		
.725				-.3799			
.750						-.1683	-.1722
.760			-.3523				
.775				-.2808	-.1779		
.808			-.2485				
.834	-.3818						
.850				-.1110	-.0466	-.0235	
.857			-.1642				
.865	-.3726						
.900	-.2171			-.0619			-.0289
.935			-.1002		.0154		
.950				-.0472		.0160	
.953			-.0642				
.965	-.1309						

ARC11-716 IA14 D1+T12+S12N25 UPPER WING (RB1U44)

ALPHAO(5) = 8.040 BETAO (1) = -8.080

SECTION (1)UPPER WING DEPENDENT VARIABLE CP

Y/BW	.2990	.3640	.4270	.5340	.6730	.7800	.8870
X/CW							
.000	-.0806	-.0231	.4091	.6392	.5582	.4569	.3709
.020				-.2931	-.3916	-.5601	-.7008
.025			-.1484				
.040		.0309					
.045			-.3214				
.050	-.1299			-.5622	-.6851	-.7939	-.9570
.080				-.7687			
.085			-.5140				
.086		-.0025					
.094	-.0916						
.150				-1.0510	-1.0800	-.9161	-.9744
.163		.0000					
.177			-.6939				
.193		-.3138					
.229	.0279						
.250				-1.0900	-1.1120	-.7489	-.7986
.274			-.8077				
.339		-.6717					
.362	-.1345						
.400				-.8163	-.6878		-.5749
.402			-.9542				
.497	.0000						
.550				-.5328	-.6991		
.565			.0000				
.600							-.5506
.650						-.5944	
.700	-.1278				-.2470		
.725				-.3804			
.750						-.4929	-.4819
.760			-.1729				
.775				-.3171	-.4866		
.808			.0047				
.834	-.0846						
.850				-.1827	-.4188	-.4438	
.857			-.0163				
.865	.0285						
.900	.0245			-.1040			-.4512
.905			.0038		-.3244		
.950				-.0496		-.3908	
.953			-.0161				
.965	-.0215						

ARC11-716 IA14 01+T12+S12N25 UPPER WING (RB1U44)

ALPHAO(5) = 7.980 BETAO (2) = -4.020

SECTION (1)UPPER WING DEPENDENT VARIABLE CP

X/CW \ Y/SW	.2990	.3640	.4270	.5340	.6730	.7800	.8870
.000	-.1498	-.0572	.3543	.5820	.5182	.4070	.3276
.020				- 335	-.3581	-.5389	-.7006
.025			-.1243				
.040		.0034					
.045			.2612				
.050	-.1561			-.5150	-.6459	-.7704	-.9527
.080				-.7114			
.085			-.4731				
.085		-.0043					
.094	-.1194						
.150				-.9451	-1.0350	-.9914	-1.0120
.163		.0000					
.177			-.6273				
.193		-.2744					
.229	.0116						
.250				-1.0040	-1.1960	-.8396	-.9314
.274			-.7475				
.339		-.6320					
.352	-.1394						
.400				-1.0320	-.7675		-.6333
.402			-.9010				
.497	.0000						
.550				-.3311	-.7029		
.565			.0000				
.600							-.5610
.650						-.5843	
.700	-.1808				-.2314		
.725				-.3343			
.750						-.5061	-.5270
.760			-.1828				
.775				-.2492	-.4702		
.808			-.0388				
.834	-.1150						
.850				-.1396	-.3678	-.4487	
.857			-.0405				
.865	-.0001						
.900	.0024			-.0790			-.5020
.905			-.0244		-.2287		
.950				-.0452		-.4008	
.953			-.0405				
.965	-.0201						

ARC11-716 IA14 D1+T12+S12N25 UPPER WING (RB1U44)

ALPHAD(5) = 7.970 BETAD (3) = .020

SECTION (1)UPPER WING DEPENDENT VARIABLE CP

Y/BW	.2990	.3640	.4270	.5340	.6730	.7800	.8070
X/CW							
.000	-.2165	-.1320	.2946	.5284	.4494	.3388	.2713
.020				-.1879	-.3324	-.5368	-.7036
.025			-.0991				
.040		.0068					
.045			-.2190				
.050	-.1644			-.4532	-.6141	-.7558	-.9526
.080				-.6463			
.085			-.4012				
.086		.0066					
.094	-.1119						
.150				-.8606	-.9958	-1.0350	-1.0350
.163		.0000					
.177			-.5768				
.193		-.2341					
.229	.0092						
.250				-.8987	-1.1330	-.9765	-.9569
.274			-.6816				
.339		-.5868					
.362	-.1162						
.400				-.9624	-.9729		-.6452
.402			-.8267				
.497	.0000						
.550				-.3352	-.6743		
.565			.0000				
.600							-.6043
.650						-.5789	
.700	-.2454				-.2286		
.725				-.2725			
.750						-.4861	-.5631
.760			-.1891				
.775				-.1538	-.4109		
.808			-.0576				
.834	-.1608						
.850				-.0998	-.2915	-.4092	
.857			-.0534				
.865	-.0332						
.900	-.0137			-.0680			-.5230
.905			-.0342		-.1498		
.950				-.0556		-.3404	
.953			-.0296				
.965	-.0396						

ARC11-716 IA14 O1+T12+S12N25 UPPER WING (RB1U44)

ALPHAO(5) = 8.020 BETAO (4) = 4.130

SECTION (1)UPPER WING DEPENDENT VARIABLE CP

Y/BW	.2990	.3640	.4270	.5340	.6730	.7800	.8870
X/CW							
.000	-.3836	-.2690	.1614	.4384	.4143	.2804	.1995
.010				-.1854	-.3027	-.5124	-.7052
.025			-.1438				
.040		-.0416					
.045			-.2277				
.050	-.1970			-.4254	-.5776	-.7157	-.9336
.080				-.5991			
.085			-.3641				
.086		-.0288					
.094	-.1489						
.150				-.7733	-.9320	-.9865	-1.0480
.163		.0000					
.177			-.5146				
.193		-.2090					
.229	-.0319						
.250				-.8054	-1.0310	-1.0580	-1.0300
.274			-.6046				
.339		-.5210					
.362	-.1163						
.400				-.8371	-1.0700		-.6816
.402			-.7303				
.497	.0000						
.550				-.4332	-.5425		
.565			.0000				
.600							-.6079
.650						-.5303	
.700	-.3159				-.2290		
.725				-.2779			
.750						-.4054	-.5911
.760			-.2293				
.775				-.1291	-.2426		
.808			-.0744				
.834	-.2426						
.850				-.0777	-.1673	-.3186	
.857			-.0605				
.865	-.0840						
.900	-.0470			-.0496			-.5064
.905			-.0444		-.0782		
.950				-.0397		-.2546	
.953			-.0419				
.965	-.0575						

ARC11-716 IA14 O1+T12+S12N25 UPPER WING (RB1U44)

ALPHAO(5) = 0.080 BETAO (5) = 8.230

SECTION (1)UPPER WING DEPENDENT VARIABLE CP

Y/BW	.2990	.3640	.4270	.5340	.6730	.7800	.8870
X/C							
.000	-.5469	-.1717	-.0817	.2641	.4017	.2927	.1746
.020				-.2736	-.2712	-.4340	-.6604
.025			-.1888				
.040		-.1098					
.045			-.2144				
.050	-.3017			-.3952	-.5233	-.6612	-.8856
.080				-.5283			
.085			-.2679				
.086		-.0949					
.094	-.3080						
.150				-.6378	-.8458	-.9035	-1.0090
.163		.0000					
.177			-.3854				
.193		-.2141					
.229	-.1037						
.230				-.6797	-.8846	-1.0480	-1.1120
.274			-.4709				
.339		-.4386					
.362	-.1074						
.400				-.5854	-.8433		-.9673
.402			-.4994				
.497	.0000						
.550				-.4911	-.6509		
.565			.0000				
.600							-.6267
.650						-.3719	
.700	-.3070				-.2367		
.725				-.2660			
.750						-.2375	-.5560
.760			-.2685				
.775				-.1318	-.0592		
.808			-.1545				
.834	-.2579						
.850				-.0619	-.0384	-.1317	
.857			-.1319				
.865	-.1782						
.900	-.1230			-.0423			-.3523
.905			-.0850		.0099		
.950				-.0400		-.0449	
.953			-.0748				
.965	-.0915						

ARC11-716 IA14 O1+T12+S12N25 UPPER WING (RB1U45) (20 FEB 74)

REFERENCE DATA

SREF = 2.4210 SQ.FT. XMRP = 29.5000 INCHES
LREF = 38.7090 INCHES YMRP = .0000 INCHES
BREF = 38.7090 INCHES ZMRP = .0000 INCHES
SCALE = .0300 SCALE

PARAMETRIC DATA

MACH = .950 ELEVON = .000
RUDDER = .000 SPDBRK = .000

ALPHAO(1) = -7.870 BETAO (1) = -8.040

SECTION (1)UPPER WING DEPENDENT VARIABLE CP

Y/BW	.2990	.3640	.4270	.5340	.6730	.7800	.8870
X/CW							
.000	.0723	.1209	.3629	.4160	.3135	.2154	.2461
.020				.5480	.5136	.5330	.5106
.025			.4495				
.040		.2714					
.045			.3827				
.050	.1083			.3302	.3404	.3485	.3008
.080				.1609			
.085			.2466				
.086		.3289					
.094	.1181						
.150				-.0693	-.0425	-.0112	-.0489
.163		.0000					
.177			.0043				
.193		.1978					
.229	.1997						
.250				-.2226	-.2422	-.2701	-.3448
.274			-.1133				
.339		-.0875					
.362	.1873						
.400				-.1432	-.2573		-.4611
.402			-.1336				
.497	.0000						
.550				-.0914	-.2381		
.565			.0000				
.600							-.3180
.650						-.1465	
.700	.0985				-.1889		
.725				-.0347			
.750						.1792	.1211
.760			-.0410				
.775				.1818	.1637		
.800			.1650				
.834	.0339						
.850				.1355	.1493	.1624	
.857			.1316				
.865	.1748						
.900	.1404			.1222			.1312
.905			.1076		.0837		

ARC11-716 IA14 O1+T12+S12N25 UPPER WING (RB1U45)

ALPHAO(1) = -7.870 BETAO (1) = -8.040

SECTION (1)UPPER WING DEPENDENT VARIABLE CP

Y/BW	.2990	.3640	.4270	.5340	.6730	.7800	.8870
X/CW							
.930				.0612		.0967	
.953			.0451				
.9[illegible]5	.0344						

ALPHAO(1) = -7.770 BETAO (2) = -4.010

SECTION (1)UPPER WING DEPENDENT VARIABLE CP

Y/BW	.2990	.3640	.4270	.5340	.6730	.7800	.8870
X/CW							
.000	.0651	.0865	.2904	.3197	.1975	.0792	.1110
.020				.5384	.4814	.4980	.4580
.025			.4317				
.040		.2381					
.045			.3822				
.050	.1057			.3461	.3434	.3423	.2903
.080				.1959			
.085			.2697				
.086		.3110					
.094	.1200						
.150				-.0183	-.0077	.0182	-.0336
.163		.0000					
.177			.0466				
.193		.2152					
.229	.1960						
.250				-.1674	-.1901	-.2254	-.3114
.274			-.0715				
.339		-.0475					
.362	.1980						
.400				-.1451	-.2414		-.4454
.402			-.1321				
.497	.0000						
.550				-.1445	-.2781		
.565			.0000				
.600							-.4446
.650						-.3859	
.700	.0400				-.2190		
.725				-.1480			
.750						.1352	.0827
.760			-.1447				
.775				.1334	.1307		
.808			.1068				
.834	-.0665						
.850				.0965	.1230	.1405	

ARC11-716 IA14 O1+T12+S12N25 UPPER WING (RB1U45)

ALPHAO(1) = -7.770 BETAO (2) = -4.010

SECTION (1)UPPER WING DEPENDENT VARIABLE CP

Y/BW	.2990	.3640	.4270	.5340	.6730	.7800	.8870
X/CW							
.857			.0809				
.865	.0982						
.900	.0781			.0914			.1106
.905			.0653		.0679		
.930				.0388		.0825	
.953			.0137				
.965	-.0070						

ALPHAO(1) = -7.760 BETAO (3) = .040

SECTION (1)UPPER WING DEPENDENT VARIABLE CP

Y/BW	.2990	.3640	.4270	.5340	.6730	.7800	.8870
X/CW							
.000	.0464	.0653	.2360	.2184	.0640	-.0731	-.0412
.020				.5131	.4333	.4394	.3920
.025			.4015				
.040		.2109					
.045			.3671				
.050	.1054			.3508	.3342	.3205	.2648
.080				.2196			
.085			.2785				
.086		.2888					
.094	.1228						
.150				.0238	.0247	.0368	-.0304
.163		.0000					
.177			.0865				
.193		.2267					
.229	.1933						
.250				-.1241	-.1533	-.1850	-.2897
.274			-.0283				
.339		-.0110					
.362	.2055						
.400				-.1389	-.2319		-.4321
.402			-.1208				
.497	.0000						
.550				-.1767	-.2964		
.565			.0000				
.600							-.4846
.650						-.4265	
.700	-.0103				-.2397		
.725				-.2699			
.750						-.1402	-.0964
.760			-.3008				

ARC11-716 IA14 OI+T12+S12N25 UPPER WING (RB1U45)

ALPHAO(1) = -7.760 BETAO (3) = .040

SECTION (1)UPPER WING DEPENDENT VARIABLE CP

X/CW \ Y/BW	.2990	.3640	.4270	.5340	.6730	.7800	.8870
.775				-.0371	-.0578		
.808			.0155				
.834	-.2208						
.850				.0242	.0360	.0435	
.857			.0105				
.865	-.0188						
.901	-.0028			.0307			.0407
.905			.0072		.0196		
.950				-.0044		.0260	
.953			-.0284				
.965	-.0370						

ALPHAO(1) = -7.900 BETAO (4) = 4.110

SECTION (1)UPPER WING DEPENDENT VARIABLE CP

X/CW \ Y/BW	.2990	.3640	.4270	.5340	.6730	.7800	.8870
.000	-.0939	.0929	.2013	.1573	-.0412	-.1839	-.1661
.020				.4915	.3957	.3868	.3259
.025			.3537				
.040		.1704					
.045			.3290				
.050	-.0100			.3491	.3232	.2940	.2274
.080				.2340			
.085			.2571				
.086		.2407					
.094	.0422						
.150				.0508	.0377	.0391	-.0407
.163		.0000					
.177			.1020				
.193		.2102					
.229	.1606						
.250				-.0957	-.1319	-.1668	-.2850
.274			.0039				
.339		.0165					
.362	.1818						
.400				-.1424	-.2318		-.4365
.402			-.1067				
.497	.0000						
.550				-.2119	-.3179		
.565			.0000				
.600							-.5266
.650						-.4555	

ALPHAO(1) = -7.900 BETAO (4) = 4.110

SECTION (1)UPPER WING DEPENDENT VARIABLE CP

X/CW \ Y/BW	.2990	.3640	.4270	.5340	.6730	.7800	.8870
.700	-.0619				-.2490		
.725				-.3074			
.750						-.4026	-.3406
.760			-.3182				
.775				-.2326	-.3220		
.808			-.1504				
.834	-.2494						
.850				-.1134	-.1120	-.0962	
.857			-.1315				
.865	-.1477						
.900	-.1329			-.0698			-.0484
.905			-.1009		-.0369		
.950				-.0708		-.0291	
.953			-.1075				
.965	-.1468						

ALPHAO(1) = -7.930 BETAO (5) = 8.180

SECTION (1)UPPER WING DEPENDENT VARIABLE CP

X/CW \ Y/BW	.2990	.3640	.4270	.5340	.6730	.7800	.8870
.000	-.2331	.0069	.1569	.0990	-.1151	-.2854	-.2750
.020				.4337	.3710	.3513	.2753
.025			.3021				
.040		.0984					
.045			.2851				
.050	-.1313			.3232	.3192	.2842	.2118
.080				.2297			
.085			.2339				
.086		.1973					
.094	-.0406						
.150				.0812	.0687	.0640	-.0271
.163		.0000					
.177			.1133				
.193		.1826					
.229	.1246						
.250				-.0480	-.0947	-.1306	-.2534
.274			.0216				
.339		.0169					
.362	.1350						
.400				-.1253	-.2127		-.4151
.402			-.0077				
.497	.0000						

ARC11-716 IA14 O1+T12+S12N25 UPPER WING (RB1U45)

ALPHAO(1) = -7.930 BETAO (5) = 8.180

SECTION (1)UPPER WING DEPENDENT VARIABLE CP

Y/BW	.2990	.3640	.4270	.5340	.6730	.7800	.8870
X/CW							
.550				-.2205	-.3113		
.565			.0000				
.600							-.5389
.650						-.4587	
.700	-.1114				-.2590		
.725				-.3302			
.750						-.4223	-.4504
.760			-.3389				
.775				-.2744	-.3500		
.808			-.2170				
.834	-.2781						
.850				-.1928	-.2418	-.2631	
.857			-.2017				
.865	-.2076						
.900	-.1950			-.1440			-.1303
.905			-.1769		-.0969		
.950				-.1306		-.0752	
.953			-.1699				
.965	-.2001						

ALPHAO(2) = -4.020 BETAO (1) = -8.080

SECTION (1)UPPER WING DEPENDENT VARIABLE CP

Y/BW	.2990	.3640	.4270	.5340	.6730	.7800	.8870
X/CW							
.000	.0620	.1892	.4649	.5615	.4950	.4371	.4676
.020				.3986	.3680	.3794	.3644
.025			.3471				
.040		.2665					
.045			.2479				
.050	.0617			.1416	.1216	.1298	.0837
.060				-.0587			
.065			.0745				
.086		.2761					
.094	.0758						
.150				-.2986	-.2990	-.2621	-.2710
.163		.0000					
.177			-.1726				
.193		.0830					
.229	.1593						
.250				-.4203	-.4823	-.5084	-.5375
.274			-.2801				
.339		-.2634					

ARC11-716 IA14 O1+T12+S12N25 UPPER WING (RB1U45)

ALPHAO(2) = -4.020 BETAO (1) = -8.080

SECTION (1)UPPER WING DEPENDENT VARIABLE CP

Y/BW	.2990	.3640	.4270	.5340	.6730	.7800	.8870
X/CW							
.362	.1021						
.400				-.3166	-.6229		-.7740
.402			-.3841				
.497	.0000						
.550				-.1629	-.3314		
.565			.0000				
.600							-.7538
.650						-.3222	
.700	.0443				-.1977		
.725				-.0496			
.750						.2165	.1546
.760			-.0470				
.775				.1674	.1720		
.808			.1509				
.834	.0054						
.850				.1310	.1527	.1722	
.857			.1249				
.865	.1559						
.900	.1316			.1147			.1286
.905			.0999		.0726		
.950				.0523		.0911	
.953			.0379				
.965	.0344						

ALPHAO(2) = -3.980 BETAO (2) = -4.030

SECTION (1)UPPER WING DEPENDENT VARIABLE CP

Y/BW	.2990	.3640	.4270	.5340	.6730	.7800	.8870
X/CW							
.000	.0444	.1543	.4025	.4664	.3807	.3059	.3497
.020				.4062	.3566	.3711	.3495
.025			.3449				
.040		.2497					
.045			.2619				
.050	.0639			.1672	.1563	.1501	.0949
.080				-.0146			
.085			.1123				
.086		.2668					
.094	.0002						
.150				-.2367	-.2307	-.2171	-.2486
.163		.0000					
.177			-.1256				
.193		.1039					

ARC11-716 IA14 01+T12+S12N25 UPPER WING (RB1U45)

ALPHAO(2) = -3.960 BETAO (2) = -4.030

SECTION (1)UPPER WING DEPENDENT VARIABLE CP

Y/BW	.2990	.3640	.4270	.5340	.6730	.7800	.8870
X/CW							
.229	.1562						
.250				-.3728	-.4345	-.4627	-.5216
.274			-.2298				
.339		-.2077					
.362	.1146						
.400				-.2514	-.3382		-.7236
.402			-.3127				
.497	.0000						
.550				-.2045	-.3666		
.565			.0000				
.600							-.5119
.650						-.4711	
.700	-.0084				-.2533		
.725				-.2809			
.750						-.0256	-.0837
.760			-.3163				
.775				.0475	.0242		
.808			.0643				
.834	-.1848						
.850				.0713	.0878	.0851	
.857			.0554				
.865	.0337						
.900	.0455			.0669			.0683
.905			.0441		.0336		
.950				.0161		.0429	
.953			-.0035				
.965	-.0185						

ALPHAO(2) = -3.870 BETAO (3) = .010

SECTION (1)UPPER WING DEPENDENT VARIABLE CP

Y/BW	.2990	.3640	.4270	.5340	.6730	.7800	.8870
X/CW							
.000	.0259	.1334	.3486	.3742	.2640	.1663	.2297
.020				.4008	.3360	.3342	.3238
.025			.3311				
.040		.2138					
.045			.2618				
.050	.0847			.1878	.1705	.1647	.1028
.080				.0325			
.085			.1360				
.088		.2489					
.094	.0847						

ARC11-716 IA14 O1+T12+S12N25 UPPER WING (RB1U45)

ALPHAO(2) = -3.870 BETAO (3) = .010

SECTION (1)UPPER WING DEPENDENT VARIABLE CP

Y/BW	.2990	.3640	.4270	.5340	.6730	.7800	.8870
X/CW							
.150				-.1630	-.1741	-.1625	-.2166
.163		.0000					
.177			-.0762				
.193		.1215					
.229	.1521						
.250				-.3073	-.3575	-.3922	-.4758
.274			-.1781				
.339		-.1508					
.362	.1247						
.400				-.2423	-.3329		-.5666
.402			-.2555				
.497	.0000						
.550				-.2323	-.3744		
.565			.0000				
.600							-.5510
.650						-.4964	
.700	-.0513				-.2748		
.725				-.3168			
.750						-.3613	-.3032
.760			-.3323				
.775				-.2937	-.3386		
.800			-.2651				
.834	-.2807						
.850				-.1044	-.1075	-.0920	
.857			-.1214				
.865	-.2222						
.900	-.1560			-.0256			-.0651
.903			-.0514		-.0376		
.950				-.0467		-.0487	
.953			-.0693				
.965	-.1004						

ALPHAO(2) = -3.940 BETAO (4) = 4.090

SECTION (1)UPPER WING DEPENDENT VARIABLE CP

Y/BW	.2990	.3640	.4270	.5340	.6730	.7800	.8870
X/CW							
.000	-.1063	.0955	.2914	.2955	.1625	.0478	.1150
.020				.3847	.3050	.3150	.2883
.025			.2931				
.040		.1663					
.045			.2396				
.050	-.0149			.1969	.1751	.1555	.1027

ARC11-716 IA14 D1+T12+S12N25 UPPER WING (RB1U45)

ALPHAO(2) = -3.940 BETAO (4) = 4.090

SECTION (1)UPPER WING DEPENDENT VARIABLE CP

Y/BW	.2990	.3640	.4270	.5340	.6730	.7800	.8870
X/CW							
.000				.0609			
.085			.1388				
.086		.2110					
.094	.0322						
.150				-.1148	-.1327	-.1252	-.1984
.163		.0000					
.177			-.0320				
.193		.1227					
.229	.1336						
.250				-.2478	-.2997	-.3349	-.4425
.274			-.1276				
.339		-.1025					
.362	.1200						
.400				-.2361	-.3265		-.5521
.402			-.2163				
.497	.0000						
.550				-.2574	-.3822		
.565			.0000				
.600							-.5718
.650						-.5160	
.700	-.0981				-.2660		
.725				-.3525			
.750						-.4460	-.3841
.760			-.3592				
.775				-.3403	-.4026		
.808			-.3007				
.834	-.3094						
.850				-.2746	-.3255	-.2382	
.857			-.2669				
.865	-.2663						
.900	-.2403			-.1869			-.1597
.905			-.2071		-.1041		
.950				-.1177		-.1243	
.953			-.1546				
.965	-.1994						

ARC11-716 IA14 O1+T12+S12N25 UPPER WING (RB1U45)

ALPHAO(2) = -3.990 BETAO (5) = 8.170

SECTION (1)UPPER WING DEPENDENT VARIABLE CP

Y/SW	.2990	.3640	.4270	.5340	.6730	.7800	.8870
X/CW							
.000	-.2093	.0179	.1301	.2591	.0850	-.0461	.0068
.020				.3625	.2948	.3064	.2589
.025			.2454				
.040		.0310					
.045			.2253				
.050	-.1577			.2021	.1927	.1742	.1106
.060				.0843			
.065			.1479				
.066		.1446					
.094	-.0868						
.150				-.0691	-.0837	-.0858	-.1650
.163		.0000					
.177			.0029				
.193		.1169					
.229	.1000						
.250				-.1885	-.2366	-.2813	-.3993
.274			-.0780				
.339		-.0606					
.362	.1011						
.400				-.2085	-.3094		-.5242
.402			-.1737				
.497	.0000						
.550				-.2721	-.3783		
.565			.0000				
.600							-.5869
.650						-.5221	
.700	-.1363				-.2729		
.725				-.3725			
.750						-.4744	-.4483
.760			-.3616				
.775				-.3591	-.4247		
.800			-.3079				
.834	-.3131						
.850				-.2900	-.3635	-.3402	
.857			-.2774				
.863	-.2859						
.900	-.2639			-.2308			-.2063
.905			-.2283		-.1602		
.950				-.1637		-.1549	
.953			-.1883				
.965	-.2303						

ARC11-716 IA14 O1+T12+S12N25 UPPER WING (RB1U45)

ALPHAO(3) = -.300 BETAO (1) = -6.100

SECTION (1)UPPER WING DEPENDENT VARIABLE CP

X/CW \ Y/BW	.2990	.3640	.4270	.5340	.6730	.7800	.8870
.000	-.0198	.1823	.5021	.6633	.6259	.5869	.5991
.020				.2333	.1828	.1487	.1062
.025			.2263				
.040		.2310					
.045			.1081				
.050	-.0858			-.0432	-.1062	-.1367	-.2079
.080				-.2614			
.085			-.0808				
.086		.2178					
.094	.0383						
.150				-.5115	-.5643	-.5187	-.4973
.163		.0000					
.177			-.3209				
.193		-.0206					
.229	.1317						
.250				-.5989	-.7084	-.7369	-.7280
.274			-.4397				
.339		-.3791					
.362	.0401						
.400				-.7133	-.8584		-.9479
.402			-.6145				
.497	.0000						
.550				-.2643	-.5120		
.565			.0000				
.600							-.6497
.650						-.5149	
.700	-.0279				-.2149		
.725				-.0572			
.750						-.1864	-.3124
.760			-.0459				
.775				.1434	.1189		
.808			.1361				
.834	-.0086						
.850				.1244	.1264	.1276	
.857			.1183				
.865	.1472						
.900	.1284			.1065			-.1697
.905			.0948		.0504		
.950				.0442		.1232	
.953			.0320				
.965	.0383						

ARC11-716 IA14 O1+T12 S12N25 UPPER WING (RB1U45)

ALPHAO(3) = -.320 BETAO (2) = -4.030

SECTION (1)UPPER WING DEPENDENT VARIABLE CP

Y/BW	.2990	.3640	.4270	.5340	.6730	.7800	.8870
X/CW							
.000	-.0091	.1558	.4545	.5869	.5403	.4956	.5200
.020				.2567	.1897	.1639	.1145
.025			.2404				
.040		.2184					
.045			.1373				
.050	.0094			-.0096	-.0721	-.0973	-.1908
.080				-.2004			
.085			-.0363				
.086		.2169					
.094	.0423						
.150				-.4474	-.4809	-.4763	-.4732
.163		.0000					
.177			-.2610				
.193		.0073					
.229	.1272						
.250				-.5366	-.6106	-.6868	-.7054
.274			-.3857				
.339		-.3364					
.362	.0516						
.400				-.6284	-.7847		-.9141
.402			-.5380				
.497	.0000						
.550				-.2348	-.4111		
.565			.0000				
.600							-.9094
.650						-.4746	
.700	-.0478				-.2724		
.725				-.3011			
.750						-.0822	-.4327
.760			-.3149				
.775				-.1320	-.0623		
.800			-.0754				
.834	-.2492						
.850				.0263	.0438	.0626	
.857			.0084				
.865	-.1059						
.900	-.0133			.0378			.0538
.905			.0237		.0119		
.950				-.0070		.0271	
.953			-.0183				
.965	-.0299						

ARC11-716 IA14 O1+T12+S12N25 UPPER WING (R81U4S)

ALPHAO(3) = -.330 BETAO (3) = .040

SECTION (1)UPPER WING DEPENDENT VARIABLE CP

X/CW \ Y/BW	.2990	.3640	.4270	.5340	.6730	.7600	.8870
.000	-.0518	.1185	.3957	.5074	.4379	.3933	.4295
.020				.2612	.1623	.1726	.1274
.025			.2294				
.040		.1890					
.045			.1388				
.050	.0124			.0168	-.0355	-.0719	-.1581
.080				-.1653			
.085			-.0042				
.086		.2024					
.094	.0420						
.150				-.3599	-.4036	-.4001	-.4316
.163		.0000					
.177			-.2172				
.193		.0266					
.229	.1222						
.250				-.4680	-.5485	-.5899	-.6487
.274			-.3267				
.339		-.2978					
.362	.0616						
.400				-.4640	-.6168		-.8573
.432			-.4277				
.497	.0000						
.550				-.2582	-.4119		
.565			.0000				
.630							-.8187
.650						-.5130	
.700	-.0799				-.2804		
.725				-.3363			
.750						-.3573	-.3039
.760			-.3424				
.775				-.3236	-.3591		
.808			-.3041				
.834	-.2878						
.850				-.2936	-.2057	-.1290	
.857			-.2082				
.865	-.2603						
.900	-.2695			-.1534			-.0813
.905			-.1946		-.0946		
.950				-.0960		-.0944	
.955			-.1169				
.965	-.1626						

ARC11-716 IA14 O1+T12+S12N25 UPPER WING (RB1U45)

ALPHAO(3) = -.330 BETAO (4) = 4.090

SECTION (1)UPPER WING DEPENDENT VARIABLE CP

Y/BW	.2990	.3640	.4270	.5340	.6730	.7800	.8870
X/CW							
.000	-.1625	.0493	.3175	.4235	.3428	.2926	.3356
.020				.2390	.1620	.1588	.1133
.025			.1852				
.040		.1319					
.045			.1174				
.050	-.0400			.0201	-.0160	-.0448	-.1424
.080				-.1377			
.085			.0086				
.086		.1559					
.094	.0087						
.150				-.2928	-.3301	-.3450	-.4097
.163		.0000					
.177			-.1832				
.193		.0316					
.229	.1035						
.250				-.4069	-.4968	-.5502	-.6301
.274			-.2481				
.339		-.2368					
.362	.0599						
.400				-.3673	-.4669		-.6039
.402			-.3464				
.497	.0000						
.550				-.2881	-.4266		
.565			.0000				
.600							-.5724
.650						-.5437	
.700	-.1275				-.2834		
.725				-.3700			
.750						-.4365	-.3669
.760			-.3662				
.775				-.3704	-.4144		
.808			-.3526				
.834	-.3193						
.850				-.3620	-.3411	-.2275	
.857			-.3597				
.865	-.3095						
.900	-.3224			-.3102			-.1416
.905			-.3077		-.1832		
.950				-.1924		-.1525	
.953			-.2319				
.965	-.2925						

ARC11-716 IA14 O1+T12+S12N25 UPPER WING (RB1U45)

ALPHAO(3) = -.330 BETAO (5) = 8.160

SECTION (1)UPPER WING DEPENDENT VARIABLE CP

Y/BW	.2990	.3640	.4270	.5340	.6730	.7800	.8570
X/CW							
.000	-.3626	-.0188	.1162	.2914	.2651	.1793	.2310
.020				.2263	.1652	.1784	.1295
.025			.0818				
.040		.0184					
.045			.0563				
.050	-.2010			.0556	.0257	-.0051	-.0924
.080				-.0689			
.085			.0173				
.086		.0054					
.094	-.1379						
.150				-.2203	-.2637	-.2838	-.3512
.163		.0000					
.177			-.0976				
.193		.0544					
.229	.0876						
.250				-.3153	-.4048	-.4594	-.5671
.274			-.1839				
.339		-.1659					
.362	.0475						
.400				-.2977	-.4037		-.6447
.402			-.2614				
.497	.0000						
.550				-.3084	-.4333		
.565			.0000				
.600							-.6167
.650						-.5677	
.700	-.1632				-.2910		
.725				-.3973			
.750						-.4909	-.4249
.760			-.3854				
.775				-.4111	-.4592		
.808			-.3841				
.834	-.3441						
.850				-.3893	-.4160	-.3153	
.857			-.3757				
.865	-.3491						
.900	-.3507			-.3205			-.2126
.905			-.3103		-.1944		
.950				-.2073		-.1960	
.953			-.2190				
.965	-.2805						

ARC11-716 IA14 O1+T12+312N25 UPPER WING (RB1U45)

ALPHAO(4) = 4.170 BETAO (1) = -8.100

SECTION (1)UPPER WING DEPENDENT VARIABLE CP

Y/BW	.2990	.3640	.4270	.5340	.6730	.7800	.8870
X/CW							
.000	-.1090	.0913	.4718	.6780	.6485	.5866	.5499
.020				-.0002	-.0677	-.1754	-.2730
.025			.0547				
.040		.1501					
.045			-.0853				
.050	-.1309			-.2792	-.3659	-.4314	-.5616
.060				-.4822			
.065			-.2970				
.086		.1321					
.094	-.0459						
.150				-.7258	-.7906	-.7760	-.7768
.163		.0000					
.177			-.4745				
.193		-.1322					
.229	.1027						
.250				-.8278	-.9516	-.9649	-.8941
.274			-.5921				
.339		-.4894					
.362	-.0205						
.400				-.8869	-1.0670		-.6871
.402			-.7617				
.497	.0000						
.550				-.3964	-.6947		
.565			.0000				
.600							-.6127
.650						-.5876	
.700	-.2513				-.2645		
.725				-.1522			
.750						-.4945	-.5386
.760			-.0324				
.775				-.0268	-.4051		
.808			.1294				
.834	-.0147						
.850				.0281	-.2997	-.4277	
.857			.0990				
.865	.1377						
.900	.1155			.0376			-.4912
.905			.0780		-.1402		
.950				.0100		-.3700	
.953			.0225				
.965	.0264						

ARC11-716 IA14 O1+T12+S12N25 UPPER WING (RB1U45)

ALPHAO(4) = 4.230 BETAO (2) = -4.030

SECTION (1)UPPER WING DEPENDENT VARIABLE CP

Y/BW	.2990	.3640	.4270	.5340	.6730	.7800	.8870
X/CW							
.000	-.2146	.0456	.4346	.6348	.5932	.5294	.5028
.020				.0376	-.0423	-.1494	-.2584
.025			.0763				
.040		.1342					
.045			-.0402				
.050	-.0920			-.2316	-.3185	-.3983	-.5299
.080				-.4333			
.085			-.2442				
.086		.1237					
.094	-.0258						
.150				-.6529	-.7215	-.7167	-.7467
.163		.0000					
.177			-.4320				
.193		-.1116					
.229	.0869						
.250				-.7255	-.8792	-.9142	-.9084
.274			-.5556				
.339		-.4615					
.362	-.0195						
.400				-.8138	-.9919		-1.0440
.402			-.7076				
.497	.0000						
.550				-.4414	-.9687		
.565			.0000				
.600							-.7632
.650						-.7145	
.700	-.1897				-.2792		
.725				-.3045			
.750						-.5400	-.5999
.760			-.3258				
.775				-.1405	-.2105		
.808			-.1892				
.834	-.2581						
.850				-.0457	-.1112	-.4692	
.857			-.0434				
.865	-.2279						
.900	-.0732			-.0148			-.5791
.905			-.0150		-.0671		
.950				-.0418		-.3668	
.953			-.0427				
.965	-.0336						

ARC11-716 IA14 O1+T12+S12N25 UPPER WING (RB1U45)

ALPHAO(4) = 4.150 BETAO (3) = .010

SECTION (1)UPPER WING DEPENDENT VARIABLE CP

Y/BW	.2990	.3640	.4270	.5340	.6730	.7800	.8870
X/CW							
.000	-.1824	-.0044	.0365	.5663	.5280	.4605	.4386
.020				.0495	-.0407	-.1493	-.2587
.025			.0720				
.040		.1145					
.045			-.0339				
.050	-.0809			-.2006	-.3066	-.3891	-.5208
.080				-.3950			
.085			-.1874				
.086		.1168					
.094	-.0247						
.150				-.5931	-.6982	-.6850	-.7262
.163		.0000					
.177			-.3763				
.193		-.0898					
.229	.0819						
.250				-.6627	-.8008	-.8833	-.8926
.274			-.4801				
.339		-.4164					
.362	-.0084						
.400				-.7479	-.9092		-1.0720
.402			-.6430				
.497	.0000						
.550				-.3603	-.6267		
.565			.0000				
.600							-.8592
.650						-.7936	
.700	-.1708				-.2833		
.725				-.3610			
.750						-.2306	-.6284
.760			-.3529				
.775				-.3530	-.2747		
.800			-.3392				
.834	-.3001						
.850				-.2565	-.1366	-.0877	
.857			-.3385				
.865	-.3043						
.900	-.3156			-.1599			-.5577
.905			-.2299		-.1216		
.950				-.1355		-.0993	
.953			-.1532				
.965	-.1838						

DATE 10 JAN 75 TABULATED PRESSURE DATA - IA14A - VOL. 6

ARC11-716 IA14 O1+T12+S12N25 UPPER WING (RB1U45)

ALPHAO(4) = 4.140 BETAO (4) = 4.110

SECTION (1)UPPER WING DEPENDENT VARIABLE CP

Y/BW	.2990	.3640	.4270	.5340	.6730	.7800	.8870
X/CW							
.000	-.3116	-.0850	.2462	.4828	.4498	.3940	.3863
.020				.0447	-.0528	-.1425	-.2500
.025			.0361				
.040		.0603					
.045			-.0410				
.050	-.1159			-.1836	-.2952	-.3732	-.4998
.080				-.3543			
.085			-.1585				
.086		.0730					
.094	-.0705						
.150				-.5312	-.6145	-.6516	-.6993
.163		.0000					
.177			-.3289				
.193		-.0669					
.229	.0592						
.250				-.5928	-.7029	-.8057	-.8662
.274			-.4239				
.339		-.3565					
.362	-.0015						
.400				-.6036	-.8162		-1.0220
.402			-.5253				
.497	.0000						
.550				-.3501	-.5077		
.565			.0000				
.600							-.9655
.650						-.5688	
.700	-.1799				-.2780		
.725				-.3972			
.750						-.3498	-.4781
.760			-.3774				
.775				-.4067	-.4288		
.808			-.3901				
.834	-.3322						
.850				-.3907	-.2910	-.1692	
.857			-.4038				
.865	-.3339						
.900	-.3569			-.3054			-.1599
.905			-.3623		-.1757		
.950				-.1772		-.1366	
.953			-.2643				
.965	-.3501						

ARC11-716 IA14 O1+T12+S12N25 UPPER WING (RB1U45)

ALPHAO(5) = 8.150 BETAO (1) = -8.090

SECTION (3)UPPER WING DEPENDENT VARIABLE CP

Y/BW	.2990	.3640	.4270	.5340	.6730	.7800	.8870
X/CW							
.000	-.1200	-.0505	.4203	.6457	.5950	.4823	.4278
.020				-.2287	-.3044	-.4592	-.5811
.025			-.0989				
.040		.0508					
.045			-.2662				
.050	-.2358			-.4817	-.5890	-.6769	-.8243
.080				-.6663			
.085			-.4640				
.086		.0336					
.094	-.1702						
.150				-.9322	-.9511	-.9545	-.9454
.163		.0000					
.177			-.6217				
.193		-.2655					
.229	.0710						
.250				-.9945	-1.1010	-.8901	-.9138
.274			-.7164				
.339		-.5832					
.362	-.0676						
.400				-1.0090	-.8067		-.7859
.402			-.8463				
.497	.0000						
.550				-.3852	-.7361		
.565			.0000				
.600							-.6169
.650						-.6378	
.700	-.0961				-.2941		
.725				-.4453			
.750						-.5555	-.5819
.760			-.2652				
.775				-.4411	-.5905		
			-.0794				
[illegible]4	-.1235						
.[illegible]0				-.3553	-.5230	-.5235	
.837			-.0545				
.865	-.0043						
.900	-.0056			-.2251			-.5705
.905			-.0318		-.4218		
.950				-.1625		-.4923	
.953			-.0503				
.965	-.0468						

ARC11-716 IA14 O1+T12+S12N25 UPPER WING (RB1U45)

ALPHAO(5) = 0.150 BETAO (2) = -4.030

SECTION (1)UPPER WING DEPENDENT VARIABLE CP

Y/BW	.2990	.3640	.4270	.5340	.6730	.7800	.8870
X/CW							
.000	-.2537	-.0954	.3945	.5990	.5382	.4296	.3711
.020				-.1743	-.2819	-.4498	-.5942
.025			-.0657				
.040		.0416					
.045			-.2129				
.050	-.1760			-.4310	-.5527	-.6645	-.8368
.080				-.6133			
.085			-.3759				
.086		.0382					
.094	-.0967						
.150				-.8522	-.9204	-.9502	-.9803
.163		.0000					
.177			-.5528				
.193		-.2177					
.229	.0562						
.250				-.8943	-1.0690	-.9351	-.9443
.274			-.6519				
.339		-.5338					
.362	-.0603						
.400				-.9294	-.9765		-.8434
.402			-.8019				
.497	.0000						
.550				-.4048	-.7744		
.565			.0000				
.600							-.6562
.650						-.6682	
.700	-.4022				-.2872		
.725				-.4358			
.750						-.5747	-.6337
.760			-.2920				
.775				-.3622	-.5893		
.808			-.1301				
.834	-.2046						
.850				-.2301	-.5092	-.5092	
.857			-.1285				
.865	-.1375						
.900	-.0880			-.1494			-.6338
.905			-.0860		-.4065		
.950				-.1209		-.4770	
.953			-.0858				
.965	-.0658						

ARC11-716 IA14 O1+T12+S12N25 UPPER WING (RB1U45)

ALPHAO(5) = 8.140 BETAO (3) = .040

SECTION (1)UPPER WING DEPENDENT VARIABLE CP

Y/BW	.2990	.3640	.4270	.5340	.6730	.7800	.8870
X/CW							
.000	-.3029	-.1207	.3345	.5878	.5046	.3778	.3101
.020				-.1082	-.2436	-.4350	-.5966
.025			-.0399				
.040		.0442					
.045			-.1552				
.050	-.1554			-.3687	-.5081	-.6382	-.8232
.080				-.5465			
.085			-.3289				
.086		.0518					
.094	-.0839						
.150				-.7577	-.8651	-.9087	-.9655
.163		.0000					
.177			-.4747				
.193		-.1609					
.229	.0508						
.250				-.8000	-1.0010	-1.0200	-1.0270
.274			-.5801				
.339		-.4820					
.362	-.0529						
.400				-.8592	-1.0710		-.9076
.402			-.7388				
.497	.0000						
.550				-.4950	-.7639		
.565			.0000				
.600							-.6931
.650						-.7099	
.700	-.3371				-.2794		
.725				-.3354			
.750						-.5631	-.6742
.760			-.3320				
.775				-.2746	-.4978		
.800			-.2458				
.834	-.2073						
.850				-.2498	-.3850	-.4983	
.857			-.2558				
.865	-.2736						
.900	-.2293			-.1959			-.6799
.905			-.1711		-.2767		
.950				-.1607		-.4685	
.955			-.1250				
.965	-.1280						

ARC11-716 IA14 O1+T12+S12N25 UPPER WING (RB1U45)

ALPHAO(5) = 8.140 BETAO (4) = 4.150

SECTION (1)UPPER WING DEPENDENT VARIABLE CP

Y/BW	.2990	.3640	.4270	.5340	.6730	.7800	.8870
X/CW							
.000	-.4529	-.1902	.1664	.5036	.4768	.3537	.2646
.020				-.1030	-.2123	-.4016	-.5938
.025			-.0829				
.040		-.0016					
.045			-.1528				
.050	-.1926			-.3329	-.4771	-.6015	-.8134
.080				-.5068			
.085			-.2663				
.086		.0096					
.094	-.1503						
.150				-.6754	-.8245	-.8716	-.9437
.163		.0000					
.177			-.4150				
.193		-.1390					
.229	-.0069						
.250				-.7114	-.9344	-1.0140	-1.0500
.274			-.5097				
.339		-.4280					
.362	-.0592						
.400				-.7828	-.9780		-.9962
.402			-.6546				
.497	.0000						
.550				-.4543	-.6563		
.565			.0000				
.600							-.7408
.650						-.6832	
.700	-.2601				-.2858		
.725				-.3501			
.750						-.5361	-.7222
.760			-.3731				
.775				-.3355	-.3115		
.808			-.3830				
.834	-.3595						
.850				-.2860	-.2609	-.4868	
.857			-.3371				
.865	-.3670						
.900	-.3922			-.2360			-.6854
.905			-.2502		-.2389		
.950				-.2008		-.4502	
.953			-.1803				
.965	-.2206						

ARC11-716 IA14 O1+T12+S12N25 UPPER WING (RB1U45)

ALPHAO(5) = 0.120 BETAO (5) = 0.270

SECTION (1)UPPER WING DEPENDENT VARIABLE CP

Y/BW	.2990	.3640	.4270	.5340	.6730	.7800	.8870
X/CW							
.000	-.5386	-.1069	-.0968	.1185	.4494	.3569	.2595
.020				-.2680	-.1817	-.3340	-.5334
.025			-.1215				
.040		-.0640					
.045			-.1809				
.050	-.3603			-.3668	-.4285	-.5440	-.7510
.080				-.4435			
.085			-.2044				
.086		-.0574					
.094	-.4181						
.150				-.5160	-.7299	-.7949	-.8897
.163		.0000					
.177			-.3129				
.193		-.1811					
.229	-.0309						
.250				-.5769	-.7862	-.9401	-1.0010
.274			-.3858				
.339		-.3886					
.362	-.0613						
.400				-.4699	-.7281		-1.0000
.402			-.3998				
.497	.0000						
.550				-.4149	-.5827		
.565			.0000				
.600							-.7699
.650						-.5068	
.700	-.2462				-.2962		
.725				-.4307			
.750						-.2527	-.7148
.760			-.4147				
.775				-.4310	-.2880		
.800			-.4453				
.834	-.3981						
.850				-.2795	-.2166	-.2658	
.857			-.3620				
.865	-.4272						
.900	-.4163			-.2051			-.6017
.905			-.2741		-.1789		
.950				-.1572		-.2411	
.953			-.1867				
.965	-.2253						

ARC11-716 IA14 O1+T12+S12N25 UPPER WING (RB1U46) (15 FEB 74)

REFERENCE DATA

SREF = 2.4210 SQ.FT. XMRP = 29.5000 INCHES
LREF = 38.7090 INCHES YMRP = .0000 INCHES
BREF = 38.7090 INCHES ZMRP = .0000 INCHES
SCALE = .0300 SCALE

PARAMETRIC DATA

MACH = .975 ELEVON = .000
RUDDER = .000 SPDBRK = .000

ALPHAO(1) = -7.970 BETAO (1) = -8.050

SECTION (1)UPPER WING DEPENDENT VARIABLE CP

Y/BW	.2990	.3640	.4270	.5340	.6730	.7800	.8870
X/CW							
.000	-.0831	.1581	.4030	.4549	.3518	.2530	.2817
.020				.5701	.5342	.5539	.5318
.025			.4735				
.040		.2990					
.045			.4040				
.050	.0652			.3528	.3644	.3684	.3296
.080				.1870			
.085			.2626				
.086		.3523					
.094	.0957						
.150				-.0390	-.0125	.0194	-.0154
.163		.0000					
.177			.0315				
.193		.2270					
.229	.2215						
.250				-.1931	-.2151	-.2387	-.3036
.274			-.0775				
.339		-.0522					
.352	.2199						
.400				-.1041	-.2179		-.4534
.412			-.1010				
.497	.0000						
.550				-.0596	-.2076		
.565			.0000				
.600							-.3532
.650						-.2103	
.700	.1323				-.1789		
.725				-.0105			
.750						.2293	.1733
.760			-.0142				
.775				.2162	.2042		
.808			.2007				
.834	.0622						
.850				.1727	.1890	.2042	
.857			.1697				
.865	.2071						
.900	.1753			.1598			.1743
.905			.1445		.1206		

ARC11-716 IA14 O1+T12+S12N25 UPPER WING (RB1U46)

ALPHAO(1) = -7.970 BETAO (1) = -8.050

SECTION (1)UPPER WING DEPENDENT VARIABLE CP

Y/BW	.2990	.3640	.4270	.5340	.6730	.7800	.8870
X/CW							
.950				.1012		.1376	
.953			.0849				
.965	.0734						

ALPHAO(1) = -7.960 BETAO (2) = -4.020

SECTION (1)UPPER WING DEPENDENT VARIABLE CP

Y/BW	.2990	.3640	.4270	.5340	.6730	.7800	.8870
X/CW							
.000	-.1868	.1233	.3323	.3567	.2311	.1127	.1426
.020				.5648	.5081	.5202	.4829
.025			.4616				
.040		.2693					
.045			.4129				
.050	.0551			.3751	.3727	.3707	.3166
.080				.2260			
.085			.2937				
.086		.3397					
.094	.0942						
.150				.0193	.0310	.0537	.0007
.163		.0000					
.177			.0869				
.193		.2517					
.229	.2208						
.250				-.1295	-.1479	-.1850	-.2712
.274			-.0290				
.339		-.0094					
.362	.2316						
.400				-.1058	-.2048		-.4044
.402			-.0890				
.497	.0000						
.550				-.1042	-.2397		
.565			.0000				
.600							-.4102
.650						-.3555	
.700	.0728				-.2260		
.725				-.1507			
.750						.1159	.0773
.760			-.1506				
.775				.1703	.1501		
.808			.1423				
.834	-.0505						
.850				.1320	.1538	.1654	

ARC11-716 IA14 O1+T12+S12N25 UPPER WING (RB:U40)

ALPHAO(1) = -7.960 BETAO (2) = -4.020

SECTION (1)UPPER WING DEPENDENT VARIABLE CP

Y/BW	.2990	.3640	.4270	.5340	.6730	.7800	.8870
X/CW							
.857			.1159				
.865	.1275						
.900	.1097			.1265			.1372
.905			.1046		.1079		
.950				.0773		.1101	
.953			.0523				
.965	.0287						

ALPHAO(1) = -7.890 BETAO (3) = .030

SECTION (1)UPPER WING DEPENDENT VARIABLE CP

Y/BW	.2990	.3640	.4270	.5340	.6730	.7800	.8870
X/CW							
.000	-.1158	.1182	.2696	.2541	.0915	-.0360	-.0091
.020				.5399	.4585	.4651	.4154
.025			.4318				
.040		.2424					
.045			.3976				
.050	.0474			.3806	.3623	.3452	.2864
.080				.2516			
.085			.3042				
.086		.3193					
.094	.0891						
.150				.0593	.0559	.0644	-.0018
.165		.0000					
.177			.1196				
.193		.2645					
.229	.2189						
.250				-.0916	-.1201	-.1515	-.2558
.274			.0070				
.339		.0323					
.362	.2446						
.400				-.1074	-.1969		-.3963
.402			-.0877				
.497	.0000						
.550				-.1410	-.2588		
.569			.0000				
.600							-.4502
.650						-.3891	
.700	.0297				-.2528		
.725				-.2395			
.750						-.2259	-.1389
.760			-.2658				

ARC11-716 IA14 O1+T12+S12N25 UPPER WING (RB1U46)

ALPHAO(1) = -7.890 BETAO (3) = .030

SECTION (1)UPPER WING DEPENDENT VARIABLE CP

X/CW \ Y/BW	.2990	.3640	.4270	.5340	.6730	.7800	.8870
.775				-.0965	-.1365		
.838			-.0040				
.834	-.1969						
.850				.0347	.0436	.0436	
.857			.0238				
.865	-.0158						
.900	.0130			.0518			.0507
.905			.0311		.0417		
.950				.0196		.0462	
.953			.0008				
.965	-.0286						

ALPHAO(1) = -7.950 BETAO (4) = 4.100

SECTION (1)UPPER WING DEPENDENT VARIABLE CP

X/CW \ Y/BW	.2990	.3640	.4270	.5340	.6730	.7800	.8870
.000	-.1218	.0961	.2092	.1551	-.0253	-.1565	-.1405
.020				.3157	.4201	.4132	.3541
.025			.3950				
.040		.1898					
.045			.3759				
.050	.0075			.3848	.3563	.3275	.2628
.080				.2782			
.085			.3134				
.086		.2733					
.094	.0635						
.150				.0999	.0898	.0856	.0063
.163		.0000					
.177			.1540				
.193		.2669					
.229	.1961						
.250				-.0292	-.0737	-.1106	-.2277
.274			.0461				
.339		.0562					
.362	.2393						
.400				-.0897	-.1740		-.3739
.402			-.0678				
.497	.0000						
.550				-.1511	-.2539		
.565			.0000				
.600							-.4665
.650						-.3933	

ARC11-716 IA14 O1+T12+S12N25 UPPER WING (RB1U46)

ALPHAO(1) = -7.950 BETAO (4) = 4.100

SECTION (1)UPPER WING DEPENDENT VARIABLE CP

Y/BW	.2990	.3640	.4270	.5340	.6730	.7800	.8870
X/CW							
.700	-.0128				-.2803		
.725				-.2641			
.750						-.3541	-.3445
.760			-.2945				
.775				-.2465	-.3016		
.808			-.2349				
.834	-.2404						
.850				-.1323	-.2241	-.1829	
.857			-.1158				
.865	-.2041						
.900	-.1158			-.0499			-.0710
.905			-.0726		-.0081		
.950				-.0345		-.0186	
.953			-.0660				
.965	-.1030						

ALPHAO(1) = -7.980 BETAO (5) = 8.190

SECTION (1)UPPER WING DEPENDENT VARIABLE CP

Y/BW	.2990	.3640	.4270	.5340	.6730	.7800	.3870
X/CW							
.000	-.3192	.0281	.1946	.1284	-.100[illegible]	-.2524	-.2506
.020				.4941	.3925	.3727	.2962
.025			.3540				
.040		.1178					
.045			.3383				
.050	-.1230			.3786	.3491	.3153	.2406
.080				.2876			
.085			.2786				
.086		.2346					
.094	-.0444						
.150				.1198	.1087	.1020	.0123
.163		.0000					
.177			.1507				
.193		.2204					
.229	.1447						
.250				-.0147	-.0512	-.0887	-.2080
.274			.0614				
.339		.0506					
.362	.1737						
.400				-.0868	-.1678		-.3667
.402			-.0555				
.497	.0000						

ARC11-716 IA14 O1+T12+S12N25 UPPER WING (RB1U46)

ALPHAO(1) = -7.980 BETAO (5) = 8.190

SECTION (1)UPPER WING DEPENDENT VARIABLE CP

Y/BW	.2990	.3640	.4270	.5340	.6730	.7800	.8870
X/CW							
.550				-.1777	-.2654		
.565			.0000				
.600							-.4894
.650						-.4103	
.700	-.0631				-.2558		
.725				-.2914			
.750						-.3794	-.4186
.760			-.3106				
.775				-.2625	-.3285		
.808			-.1951				
.834	-.2591						
.850				-.1670	-.2534	-.2880	
.857			-.1756				
.865	-.1825						
.900	-.1646			-.1272			-.1407
.905			-.1498		-.0800		
.950				-.1054		-.0755	
.953			-.1430				
.965	-.1753						

ALPHAO(2) = -3.920 BETAO (1) = -8.060

SECTION (1)UPPER WING DEPENDENT VARIABLE CP

Y/BW	.2990	.3640	.4270	.5340	.6730	.7800	.8870
X/CW							
.000	-.1221	.2129	.4980	.5945	.5245	.4690	.4936
.020				.4228	.3866	.4013	.3859
.025			.3698				
.040		.2865					
.045			.2693				
.050	.0141			.1635	.1392	.1514	.1050
.080				-.0536			
.085			.0982				
.086		.2975					
.094	.0619						
.150				-.2664	-.2749	-.2337	-.2386
.163		.0000					
.177			-.1453				
.193		.1065					
.229	.1793						
.250				-.3904	-.4431	-.4685	-.4951
.274			-.2474				
.339		-.2299					

ARC11-716 IA14 O1+T12+S12N25 UPPER WING (RB1U46)

ALPHAO(2) = -3.920 BETAO (1) = -8.060

SECTION (1)UPPER WING DEPENDENT VARIABLE CP

Y/BW	.2990	.3640	.4270	.5340	.6730	.7800	.8870
X/CW							
.362	.1322						
.400				-.3769	-.6099		-.7269
.402			-.3763				
.497	.0000						
.550				-.1276	-.2901		
.565			.0000				
.600							-.7254
.650						-.3676	
.700	.0758				-.1907		
.725				-.0383			
.750						.2494	.1518
.760			-.0317				
.775				.1928	.2036		
.808			.1807				
.834	.0240						
.850				.1617	.1857	.2067	
.857			.1574				
.865	.1014						
.900	.1617			.1449			.1661
.905			.1335		.1035		
.950				.0831		.1267	
.953			.0738				
.965	.0690						

ALPHAO(2) = -3.920 BETAO (2) = -4.010

SECTION (1)UPPER WING DEPENDENT VARIABLE CP

Y/BW	.2990	.3640	.4270	.5340	.6730	.7800	.8870
X/CW							
.000	-.2323	.1889	.4414	.5036	.4179	.3464	.3851
.020				.4345	.3870	.4010	.3806
.025			.3755				
.040		.2715					
.045			.2924				
.050	.0026			.1982	.1834	.1820	.1313
.080				.0235			
.085			.1434				
.086		.2987					
.094	.0551						
.150				-.1919	-.1899	-.1767	-.2017
.163		.0000					
.177			-.0834				
.193		.1438					

ARC11-716 IA14 O1+T12+S12N25 UPPER WING (RB1U46)

ALPHAO(2) = -3.920 BETAO (2) = -4.010

SECTION (1)UPPER WING DEPENDENT VARIABLE CP

Y/BW	.2990	.3640	.4270	.5340	.6730	.7800	.8670
X/CW							
.229	.1061						
.250				-.3212	-.3862	-.4124	-.4727
.274			-.1847				
.339		-.1629					
.362	.1559						
.400				-.2186	-.2931		-.6720
.402			-.2756				
.497	.0000						
.550				-.1538	-.3108		
.565			.0000				
.600							-.4458
.650						-.4129	
.700	.0380				-.2579		
.725				-.2297			
.750						-.0441	-.0806
.760			-.2703				
.775				.0056	.0142		
.808			.0667				
.834	-.1769						
.850				.0952	.1036	.1027	
.857			.0825				
.865	.0389						
.900	.0718			.0976			.0903
.905			.0792		.0649		
.950				.0492		.0690	
.953			.0334				
.965	.0162						

ALPHAO(2) = -3.850 BETAO (3) = .020

SECTION (1)UPPER WING DEPENDENT VARIABLE CP

Y/BW	.2990	.3640	.4270	.5340	.6730	.7800	.8670
X/CW							
.000	-.3084	.1641	.3871	.4173	.2965	.2035	.2603
.020				.4313	.3609	.3774	.3511
.025			.3630				
.040		.2443					
.045			.2956				
.050	.0230			.2230	.1984	.1941	.1304
.080				.0728			
.085			.1676				
.086		.2805					
.094	.0714						

ARC11-716 IA14 O1+T12+S12N25 UPPER WING (RB1U46)

ALPHAO(2) = -3.850 BETAO (3) = .020

SECTION (1)UPPER WING DEPENDENT VARIABLE CP

X/CW \ Y/BW	.2990	.3640	.4270	.5340	.6730	.7800	.8870
.150				-.1249	-.1371	-.1317	-.1867
.163		.0000					
.177			-.0318				
.193		.1615					
.229	.1826						
.250				-.2654	-.3230	-.3564	-.4367
.274			-.1318				
.339		-.1066					
.362	.1672						
.400				-.1985	-.2888		-.5232
.402			-.2127				
.497	.0000						
.550				-.1873	-.3275		
.565			.0000				
.600							-.5042
.650						-.4500	
.700	-.0037				-.2736		
.725				-.2739			
.750						-.3371	-.2889
.760			-.2911				
.775				-.2578	-.3094		
.808			-.2303				
.834	-.2354						
.850				-.1911	-.1447	-.0951	
.857			-.1782				
.865	-.1875						
.900	-.1594			-.0259			-.0462
.905			-.0476		-.0193		
.950				-.0210		-.0336	
.953			-.0411				
.965	-.0833						

ALPHAO(2) = -3 970 BETAO (4) = 4.100

SECTION (1)UPPER WING DEPENDENT VARIABLE CP

X/CW \ Y/BW	.2990	.3640	.4270	.5340	.6730	.7800	.8870
.000	-.2983	.1182	.3158	.3299	.1991	.0950	.1473
.020				.4231	.3429	.3492	.3194
.025			.3348				
.040		.1809					
.045			.2862				
.050	-.0220			.2416	.2130	.1944	.1385

ARC11-716 IA14 O1+T12+S12N25 UPPER WING (RB1U46)

ALPHAO(2) = -3.970 BETAO (4) = 4.100

SECTION (1)UPPER WING DEPENDENT VARIABLE CP

Y/BW	.2990	.3640	.4270	.5340	.6730	.7800	.8870
X/CW							
.080				.1090			
.085			.1878				
.086		.2423					
.094	.0355						
.150				-.0616	-.0843	-.0809	-.1500
.163		.0000					
.177			.0150				
.193		.1747					
.229	.1642						
.250				-.1976	-.2511	-.2835	-.3841
.274			-.0756				
.339		-.0590					
.362	.1683						
.400				-.1861	-.2669		-.4914
.402			-.1715				
.497	.0000						
.550				-.1985	-.3209		
.565			.0000				
.600							-.5103
.650						-.4510	
.700	-.0399				-.2723		
.725				-.2964			
.750						-.3906	-.3366
.760			-.3154				
.775				-.2949	-.3484		
.808			-.2812				
.834	-.2643						
.850				-.2924	-.3062	-.2176	
.857			-.2760				
.865	-.2469						
.900	-.2299			-.2251			-.1262
.905			-.1966		-.1259		
.950				-.1252		-.1163	
.953			-.1661				
.965	-.2076						

ARC11-716 IA14 O1+T12+S12N25 UPPER WING (RB1U46)

ALPHAO(2) = -3.990 BETAO (5) = 8.160

SECTION (1)UPPER WING DEPENDENT VARIABLE CP

Y/BW	.2990	.3640	.4270	.5340	.6730	.7800	.8870
X/CW							
.000	-.4262	.0255	.1205	.2918	.1145	-.0112	.0304
.020				.4049	.3298	.3344	.2895
.025			.2752				
.040		.0251					
.045			.2671				
.050	-.1609			.2458	.2320	.2073	.1431
.080				.1293			
.085			.1935				
.086		.1616					
.094	-.0844						
.150				-.0284	-.0433	-.0422	-.1231
.163		.0000					
.177			.0405				
.193		.1549					
.229	.1106						
.250				-.1457	-.1919	-.2389	-.3497
.274			-.0417				
.339		-.0298					
.362	.1361						
.400				-.1712	-.2621		-.4723
.402			-.1421				
.497	.0000						
.550				-.2251	-.3283		
.565			.0000				
.600							-.5367
.650						-.4704	
.700	-.0919				-.2704		
.725				-.3251			
.750						-.4272	-.4095
.760			-.3342				
.775				-.3161	-.3786		
.808			-.2797				
.834	-.2890						
.850				-.2742	-.3362	-.3227	
.857			-.2583				
.865	-.2543						
.900	-.2319			-.2206			-.1887
.905			-.2154		-.1736		
.950				-.1753		-.1591	
.953			-.1985				
.965	-.2319						

ARC11-716 IA14 O1+T12+S12N25 UPPER WING (RB1U46)

ALPHAO(3) = -.300 BETAO (1) = -8.100

SECTION (1)UPPER WING DEPENDENT VARIABLE CF

Y/BW	.2990	.3640	.4270	.5340	.6730	.7800	.8870
X/CW							
.000	-.0925	.1877	.5230	.6814	.6565	.6156	.6260
.020				.2523	.2158	.1822	.1468
.025			.2435				
.040		.2416					
.045			.1277				
.050	-.1855			-.0213	-.0690	-.0967	-.1726
.080				-.2325			
.085			-.0609				
.086		.2326					
.094	.0027						
.150				-.4759	-.5179	-.4702	-.4465
.163		.0000					
.177			-.2869				
.193		.0035					
.229	.1469						
.250				-.5523	-.6592	-.6900	-.6732
.274			-.4088				
.339		-.3475					
.362	.0662						
.400				-.6676	-.8051		-.8905
.402			-.5801				
.497	.0000						
.550				-.2496	-.6762		
.565			.0000				
.600							-.9102
.650						-.5740	
.700	-.0153				-.2269		
.725				-.1084			
.750						-.3282	-.3843
.760			-.0785				
.775				.1395	.1026		
.800			.1371				
.834	-.0438						
.850				.1403	.1307	.0275	
.857			.1273				
.865	.1424						
.900	.1394			.1266			-.1667
.905			.1092		.0744		
.950				.0674		.1303	
.953			.0510				
.965	.0588						

ARC11-716 IA14 O1+T12+S12N25 UPPER WING (RB1U46)

ALPHAO(3) = -.320 BETAO (2) = -4.030

SECTION (1)UPPER WING DEPENDENT VARIABLE CP

Y/BW	.2990	.3640	.4270	.5340	.6730	.7800	.8870
X/CW							
.000	-.2079	.1732	.4811	.6155	.5688	.5273	.5500
.020				.2840	.2221	.1978	.1561
.025			.2662				
.040		.2392					
.045			.1641				
.050	-.1119			.0223	-.0355	-.0595	-.1464
.060				-.1622			
.065			-.0072				
.086		.2405					
.094	.0330						
.150				-.3949	-.4338	-.4232	-.4217
.163		.0000					
.177			-.2211				
.193		.0396					
.229	.1523						
.250				-.4858	-.5621	-.6300	-.6470
.274			-.3408				
.339		-.2941					
.362	.0861						
.400				-.5837	-.7323		-.8532
.402			-.4971				
.497	.0000						
.550				-.1852	-.3646		
.565			.0000				
.600							-.8513
.650						-.4215	
.700	-.0111				-.2798		
.725				-.2567			
.750						-.1340	-.4595
.760			-.2825				
.775				-.1863	-.1442		
.808			-.1415				
.834	-.2149						
.850				.0104	.0207	.0460	
.857			-.0026				
.865	-.1395						
.900	-.0312			.0463			-.0393
.905			.0316		.0214		
.950				.0126		.0358	
.953			-.0001				
.965	-.0109						

ARC11-716 IA14 O1+T12+S12N25 UPPER WING (RB1U46)

ALPHAO(3) = -.338 BETAO (3) = .049

SECTION (::UPPER WING DEPENDENT VARIABLE CP

Y/BW	.2990	.3640	.4270	.5340	.6730	.7800	.8870
X/CW							
.000	-.3065	.1353	.4220	.5319	.4684	.4224	.4575
.020				.2874	.2252	.2086	.1676
.025			.2597				
.040		.2142					
.045			.1705				
.050	-.0061			.0512	.0017	-.0233	-.1074
.080				-.1189			
.085			.0309				
.066		.2248					
.094	.0403						
.150				-.3110	-.3529	-.3561	-.3802
.163		.0000					
.177			-.1690				
.193		.0630					
.229	.1494						
.250				-.4157	-.4976	-.5389	-.5958
.274			-.2763				
.339		-.2523					
.362	.0994						
.400				-.4138	-.5661		-.7979
.402			-.3764				
.497	.0000						
.550				-.2124	-.3618		
.565			.0000				
.600							-.7668
.650						-.4608	
.700	-.0432				-.2784		
.725				-.2922			
.750						-.3236	-.2648
.760			-.3107				
.775				-.2782	-.3155		
.800			-.2649				
.834	-.0845						
.850				-.2565	-.1795	-.0897	
.857			-.2689				
.865	-.2218						
.900	-.2261			-.1551			-.0211
.905			-.1865		-.0733		
.950				-.0753		-.0538	
.953			-.1151				
.965	-.1767						

ARC11-716 IA14 O1+T12+S12N25 UPPER WING (RB1U46)

ALPHAO(3) = -.330 BETAO (4) = 4.080

SECTION (1)UPPER WING DEPENDENT VARIABLE CP

Y/BW	.2990	.3640	.4270	.5340	.6730	.7800	.8870
X/CW							
.000	-.3474	.0708	.3337	.4451	.3644	.3167	.3589
.020				.2754	.1998	.1933	.1567
.025			.2132				
.040		.1403					
.045			.1469				
.050	-.0643			.0559	.0225	-.0091	-.0917
.080				-.0920			
.085			.0458				
.086		.1697					
.094	-.0114						
.150				-.2413	-.2852	-.3023	-.3587
.163		.0000					
.177			-.1386				
.193		.0738					
.229	.1274						
.250				-.3602	-.4460	-.4992	-.5785
.274			-.2095				
.339		-.1869					
.362	.0971						
.400				-.3159	-.4140		-.7474
.402			-.2941				
.497	.0000						
.550				-.2424	-.3784		
.565			.0000				
.600							-.5234
.650						-.4928	
.700	-.0841				-.2871		
.725				-.3249			
.750						-.3949	-.3286
.760			-.3443				
.775				-.3247	-.3705		
.808			-.3132				
.834	-.2868						
.850				-.3245	-.3093	-.1959	
.857			-.3287				
.865	-.2752						
.900	-.2835			-.2929			-.1030
.905			-.2892		-.1715		
.950				-.2047		-.1223	
.953			-.2430				
.965	-.2917						

ARC11-716 IA14 01^T12+S12N25 UPPER WING (RB1U46)

ALPHAO(3) = -.330 BETAO (5) = 8.160

SECTION (1)UPPER WING DEPENDENT VARIABLE CP

X/CW \ Y/BW	.2990	.3640	.4290	.5340	.6730	.7800	.8870
.000	-.5163	-.0067	.1252	.2096	.2862	.2066	.2465
.020				.2511	.2068	.2066	.1670
.025			.0964				
.040		.0278					
.045			.0771				
.050	-.2430			.0950	.0648	.0347	-.0493
.060				-.0228			
.085			.0447				
.086		.0020					
.094	-.1577						
.150				-.1724	-.2188	-.2434	-.3108
.163		.0000					
.177			-.0574				
.193		.0888					
.229	.1014						
.250				-.2706	-.3619	-.4135	-.5236
.274			-.1476				
.339		-.1345					
.362	.0750						
.400				-.2599	-.3604		-.6040
.402			-.2282				
.497	.0000						
.550				-.2659	-.3833		
.565			.0000				
.600							-.5721
.650						-.5180	
[illegible]	-.1239				-.2877		
[illegible]				-.3563			
[illegible]						-.4462	-.3073
.750			-.3572				
.775				-.3640	-.4116		
.800			-.3443				
.834	-.3151						
.850				-.3561	-.3773	-.2878	
.857			-.3477				
.865	-.3170						
.900	-.3141			-.3109			-.1810
.905			-.2989		-.2194		
.950				-.2409		-.1752	
.953			-.2547				
.965	-.3001						

ARC11-716 IA14 O1+T12+S12N25 UPPER WING (R81U46)

ALPHAO(4) = 4.100 BETAO (1) = -8.100

SECTION (1)UPPER WING DEPENDENT VARIABLE CP

Y/BW	.2990	.3640	.4270	.5340	.6730	.7800	.8870
X/CW							
.000	-.0830	.0872	.4988	.7008	.6746	.6157	.5803
.020				.0308	-.0238	-.1265	-.2218
.025			.0854				
.040		.1546					
.045			-.0608				
.050	-.2081			-.2428	-.3141	-.3749	-.4995
.080				-.4353			
.085			-.2587				
.086		.1481					
.094	-.1885						
.150				-.6751	-.7241	-.7111	-.7089
.163		.0000					
.177			-.4298				
.193		-.1060					
.229	.1211						
.250				-.7569	-.8792	-.8907	-.8627
.274			-.5463				
.339		-.4473					
.362	.0123						
.400				-.8209	-1.0060		-.9038
.402			-.6984				
.497	.0000						
.550				-.4641	-.7852		
.565			.0000				
.600							-.7063
.650						-.6246	
.700	-.2672				-.2888		
.725				-.1729			
.750						-.5141	-.5928
.760			-.1021				
.775				-.0413	-.4471		
.808			.1117				
.834	-.1019						
.850				.0300	-.2836	-.4523	
.857			.1065				
.865	.1033						
.900	.1162			.0418			-.5424
.905			.0967		-.0697		
.950				.0068		-.4210	
.953			.0459				
.965	.0502						

ARC11-716 IA14 O1+T12+S12N25 UPPER WING (RB1U46)

ALPHAO(4) = 4.090 BETAO (2) = -4.040

SECTION (1)UPPER WING DEPENDENT VARIABLE CP

Y/BW	.2990	.3640	.4270	.5340	.6730	.7800	.8870
X/CW							
.000	-.1960	.0576	.4570	.6614	.6172	.5543	.5226
.020				.0627	-.0106	-.1179	-.2278
.025			.1031				
.040		.1532					
.045			-.0191				
.050	-.2991			-.2007	-.2872	-.3604	-.4871
.080				-.3965			
.085			-.2137				
.086		.1511					
.094	-.0301						
.150				-.6093	-.6784	-.6721	-.7030
.163		.0000					
.177			-.3903				
.193		-.0775					
.229	.1175						
.250				-.6862	-.8378	-.8670	-.8564
.274			-.4964				
.339		-.4123					
.362	.0202						
.400				-.7652	-.9497		-1.0280
.402			-.6553				
.497	.0000						
.550				-.3902	-.9348		
.565			.0000				
.600							-.8614
.650						-.7499	
.700	-.1591				-.2833		
.725				-.3225			
.750						-.5269	-.6535
.760			-.3098				
.775				-.1922	-.1787		
.808			-.1991				
.834	-.2174						
.850				-.0794	-.0801	-.4370	
.857			-.1394				
.865	-.2075						
.900	-.1901			-.0221			-.6216
.905			-.0296		-.0539		
.950				-.0346		-.3095	
.953			-.0329				
.965	-.0299						

ARC11-716 IA14 O1+T12+S12N25 UPPER WING (RB1U46)

ALPHAO(4) = 4.090 BETAO (3) = .030

SECTION (1)UPPER WING DEPENDENT VARIABLE CP

Y/BW	.2990	.3640	.4270	.5340	.6730	.7800	.8870
X/CW							
.000	-.3483	.0028	.3878	.5904	.5543	.4890	.4634
.020				.0741	-.0030	-.1031	-.2203
.025			.0954				
.040		.1325					
.045			-.0039				
.050	-.0856			-.1663	-.2645	-.3410	-.4740
.080				-.3559			
.085			-.1568				
.086		.1386					
.094	-.0186						
.150				-.5474	-.6475	-.6305	-.6742
.163		.0000					
.177			-.3336				
.193		-.0527					
.229	.1052						
.250				-.6085	-.7500	-.8324	-.8316
.274			-.4323				
.339		-.3693					
.362	.0268						
.400				-.6937	-.8566		-1.0060
.402			-.5901				
.497	.0000						
.550				-.3174	-.5998		
.565			.0000				
.600							-.9711
.650						-.8489	
.700	-.1301				-.2848		
.725				-.3197			
.750						-.2282	-.6240
.760			-.3378				
.775				-.3079	-.2912		
.808			-.2921				
.834	-.2595						
.850				-.2685	-.1405	-.0595	
.857			-.3173				
.865	-.2603						
.900	-.2677			-.1895			-.4240
.905			-.2620		-.0959		
.950				-.1364		-.0464	
.953			-.1902				
.965	-.2796						

ARC11-716 IA14 O1+T12+S12N25 UPPER WING (RB1U46)

ALPHAO(4) = 4.070 BETAO (4) = 4.120

SECTION (1)UPPER WING DEPENDENT VARIABLE CP

Y/BW	.2990	.3640	.4270	.5340	.6730	.7600	.8870
X/CW							
.000	-.5598	-.0595	.2599	.4924	.4846	.4305	.4188
.020				.0904	.0017	-.0863	-.1944
.025			.0708				
.040		.0773					
.045			.0015				
.050	-.1639			-.1262	-.2344	-.3127	-.4336
.080				-.2856			
.085			-.0983				
.086		.0417					
.094	-.0903						
.150				-.4626	-.5538	-.5859	-.6281
.163		.0000					
.177			-.2667				
.193		-.0346					
.229	.0864						
.250				-.5281	-.6343	-.7330	-.7903
.274			-.3682				
.339		-.3091					
.362	.0260						
.400				-.5326	-.7458		-.9439
.402			-.4614				
.497	.0000						
.550				-.2908	-.4372		
.565			.0000				
.600							-.9090
.650						-.5032	
.700	-.1393				-.2990		
.725				-.3477			
.750						-.3728	-.4793
.760			-.3578				
.775				-.3475	-.3790		
.808			-.3411				
.834	-.3062						
.850				-.3465	-.2896	-.1849	
.857			-.3691				
.865	-.3109						
.900	-.3208			-.3126			-.1251
.905			-.3394		-.1735		
.950				-.2366		-.1099	
.953			-.2886				
.965	-.3470						

ARC11-716 IA14 O1+T12+S12N25 UPPER WING (RB1U46)

ALPHA0(4) = 4.060 BETA0 (5) = 8.200

SECTION (1)UPPER WING DEPENDENT VARIABLE CP

Y/BW	.2990	.3640	.4270	.5340	.6730	.7800	.8870
X/CW							
.000	-.5502	-.0392	.0665	.2282	.4284	.3649	.3736
.020				.0079	.0432	-.0380	-.1441
.025			.0066				
.040		.0078					
.045			-.0208				
.050	-.3285			-.1136	-.1644	-.2475	-.3681
.080				-.2094			
.095			-.0719				
.096		.0217					
.094	-.3676						
.150				-.3267	-.4555	-.5034	-.5560
.163		.0000					
.177			-.1815				
.193		-.0146					
.229	.0952						
.250				-.4031	-.5486	-.6225	-.7191
.274			-.2647				
.339		-.2389					
.362	.0256						
.400				-.3431	-.4999		-.8552
.402			-.2978				
.497	.0000						
.550				-.3135	-.4512		
.565			.0000				
.600							-.6237
.650						-.5613	
.700	-.1524				-.3094		
.725				-.3782			
.750						-.4535	-.3944
.760			-.3819				
.775				-.3985	-.4295		
.808			-.3961				
.834	-.3365						
.850				-.3853	-.3740	-.2619	
.857			-.4003				
.865	-.3490						
.900	-.3676			-.3308			-.1897
.905			-.3478		-.2041		
.950				-.2454		-.1815	
.953			-.2808				
.965	-.3545						

ARC11-716 IA14 O1+T12+S12N25 UPPER WING (RB1U46)

ALPHAO(5) = 8.040 BETAO (1) = -8.080

SECTION (1)UPPER WING DEPENDENT VARIABLE CP

Y/BW	.2990	.3640	.4270	.5340	.6730	.7800	.8970
X/CW							
.000	-.0839	-.0696	.4323	.6811	.6100	.5117	.4547
.020				-.2092	-.2690	-.4141	-.5272
.025			-.0858				
.040		.0483					
.045			-.2437				
.050	-.2154			-.4465	-.5434	-.6367	-.7722
.060				-.6330			
.085			-.4408				
.086		.0434					
.094	-.2054						
.150				-.8852	-.9021	-.9142	-.9262
.163		.0000					
.177			-.5759				
.193		-.2370					
.229	.0846						
.250				-.9530	-1.0470	-.8847	-.9054
.274			-.6734				
.339		-.5353					
.352	-.0377						
.400				-.9740	-.9023		-.8447
.402			-.7912				
.497	.0000						
.550				-.4646	-.7867		
.565			.0000				
.600							-.6873
.650						-.7090	
.700	-.6146				-.3134		
.725				-.4829			
.750						-.5946	-.6674
.760			-.2670				
.775				-.4853	-.6245		
.808			-.1139				
.834	-.1274						
.850				-.3349	-.5767	-.5268	
.857			-.0812				
.865	-.0138						
.900	-.0125			-.2204			-.6555
.905			-.0306		-.4875		
.950				-.1372		-.4991	
.953			-.0282				
.965	-.0256						

ARC11-716 IA14 O1+T12+S12N25 UPPER WING (RB1U46)

ALPHAO(5) = 7.920 BETAO (2) = -4.020

SECTION (1)UPPER WING DEPENDENT VARIABLE CP

Y/B	.2990	.3640	.4270	.5340	.6730	.7800	.8870
X/CW							
.000	-.2156	-.0796	.4224	.6478	.5828	.4627	.3993
.020				-.1312	-.2341	-.3958	-.5378
.025			-.0260				
.040		.0679					
.045			-.1744				
.050	-.3131			-.3842	-.5031	-.6086	-.7710
.080				-.5624			
.085			-.3361				
.086		.0657					
.094	-.2504						
.150				-.8038	-.8615	-.8871	-.9251
.163		.0000					
.177			-.5040				
.193		-.1752					
.229	.0871						
.250				-.8432	-1.0060	-.9303	-.9697
.274			-.6050				
.339		-.4847					
.362	-.0250						
.400				-.8786	-1.0290		-.9021
.402			-.7457				
.497	.0000						
.550				-.4805	-.8257		
.565			.0000				
.600							-.7301
.650						-.7279	
.700	-.4821				-.3044		
.725				-.3777			
.750						-.5931	-.6883
.760			-.2796				
.775				-.3063	-.6180		
.808			-.1262				
.834	-.1885						
.850				-.2173	-.5307	-.5060	
.857			-.1304				
.865	-.1470						
.900	-.1006			-.1462			-.6911
.905			-.0856		-.4161		
.950				-.1099		-.4827	
.953			-.0647				
.965	-.0489						

ARC11-716 IA14 O1+T12+S12N25 UPPER WING (RB1U46)

ALPHAO(5) = 7.910 BETAO (3) = .080

SECTION (1)UPPER WING DEPENDENT VARIABLE CP

Y/BW	.2990	.3640	.4270	.5340	.6750	.7800	.8870
X/CW							
.000	-.3696	-.1155	.3540	.6064	.5479	.4362	.3565
.020				-.0699	-.1989	-.3791	-.5384
.025			-.0107				
.040		.0650					
.045			-.1249				
.050	-.3822			-.3221	-.4642	-.5862	-.7670
.080				-.4985			
.085			-.2882				
.086		.0760					
.094	-.0638						
.150				-.7021	-.8171	-.8567	-.9079
.163		.0000					
.177			-.4328				
.193		-.1225					
.229	.0718						
.250				-.7541	-.9499	-.9961	-1.0130
.274			-.5320				
.339		-.4342					
.362	-.0195						
.400				-.8118	-1.0310		-1.0400
.402			-.6862				
.497	.0000						
.550				-.5094	-.8992		
.565			.0000				
.600							-.8059
.650						-.7710	
.700	-.2989				-.3015		
.725				-.3350			
.750						-.5928	-.7538
.760			-.3358				
.775				-.2660	-.4181		
.808			-.2662				
.834	-.2700						
.850				-.2339	-.2670	-.5280	
.857			-.2756				
.865	-.2808						
.900	-.2932			-.2095			-.7495
.905			-.2326		-.1773		
.950				-.1926		-.5441	
.953			-.1796				
.965	-.1820						

ARC11-716 IA14 O1+T12+S12N25 UPPER WING (RB1U46)

ALPHAO(5) = 8.040 BETAO (4) = 4.150

SECTION (1)UPPER WING DEPENDENT VARIABLE CP

Y/BW	.2990	.3640	.4270	.5340	.6730	.7800	.8870
X/CW							
.000	-.6135	-.1564	.1455	.5224	.5000	.3933	.3158
.020				-.0739	-.1728	-.3505	-.5382
.025			-.0715				
.040		.0006					
.045			-.1271				
.050	-.2237			-.2979	-.4297	-.5538	-.7563
.080				-.4626			
.085			-.2194				
.086		.0200					
.094	-.1528						
.150				-.6238	-.7726	-.8242	-.8930
.163		.0000					
.177			-.3649				
.193		-.1003					
.229	.0377						
.250				-.6576	-.8840	-.9639	-.9997
.274			-.4513				
.339		-.3607					
.362	-.0257						
.400				-.7194	-.9234		-1.1130
.402			-.5835				
.497	.0000						
.550				-.3994	-.6914		
.565			.0000				
.600							-.9054
.650						-.7693	
.700	-.2141				-.2934		
.725				-.3809			
.750						-.4619	-.8413
.760			-.3708				
.775				-.3913	-.2987		
.808			-.3863				
.834	-.3328						
.850				-.3457	-.2065	-.2394	
.857			-.4003				
.865	-.3366						
.900	-.3610			-.2515			-.7751
.905			-.3515		-.1885		
.950				-.2108		-.2035	
.953			-.2590				
.965	-.3209						

ARC11-716 IA14 O1+T12+S12N25 UPPER WING (RB1U46)

ALPHAO(5) = 8.030 BETAO (5) = 8.220

SECTION (1)UPPER WING DEPENDENT VARIABLE CP

Y/BW	.2990	.3640	.4270	.5340	.6730	.7800	.8870
X/CW							
.000	-.5804	-.0860	-.0639	.0549	.4383	.3775	.2982
.020				-.2836	-.1971	-.3113	-.4882
.025			-.1097				
.040		-.0483					
.045			-.1363				
.050	-.3962			-.3460	-.4253	-.5151	-.7115
.080				-.4149			
.085			-.1833				
.086		-.0385					
.094	-.4614						
.150				-.4672	-.6920	-.7646	-.8432
.163		.0000					
.177			-.2850				
.193		-.1581					
.229	.0094						
.250				-.4928	-.7250	-.8919	-.9522
.274			-.3538				
.339		-.3472					
.362	-.0279						
.400				-.4005	-.6222		-1.0580
.402			-.3538				
.497	.0000						
.550				-.3701	-.5312		
.565			.0000				
.600							-.9858
.650						-.6097	
.700	-.2070				-.3085		
.725				-.4107			
.750						-.4356	-.5747
.760			-.4097				
.775				-.4443	-.4566		
.808			-.4597				
.834	-.3761						
.850				-.3650	-.3132	-.2272	
.857			-.4090				
.865	-.3979						
.900	-.4248			-.2765			-.3442
.905			-.3158		-.1824		
.950				-.2175		-.1836	
.953			-.2316				
.965	-.2627						

ARC11-716 IA14 O1+T12+S12N25 UPPER WING (RB1U47) (15 FEB 74)

REFERENCE DATA

SREF = 2.4210 SQ.FT. XMRP = 29.5800 INCHES
LREF = 38.7090 INCHES YMRP = .0000 INCHES
BREF = 38.7090 INCHES ZMRP = .0000 INCHES
SCALE = .0300 SCALE

PARAMETRIC DATA

MACH = 1.050 ELEVON = .000
RUDDER = .000 SPDBRK = .000

ALPHAO(1) = -7.960 BETAO (1) = -8.070

SECTION (1)UPPER WING DEPENDENT VARIABLE CP

Y/BW	.2990	.3640	.4270	.5340	.6730	.7800	.8870
X/CW							
.000	-.1528	-.1080	.4113	.5063	.4213	.3388	.3673
.020				.5616	.5340	.5642	.5584
.025			.4523				
.040		.2204					
.045			.3830				
.050	-.0569			.3393	.3529	.3784	.3524
.080				.1594			
.085			.2445				
.086		.3041					
.094	-.0276						
.150				-.0642	-.0138	.0266	.0136
.163		.0000					
.177			-.0020				
.193		.1871					
.229	.0114						
.250				-.2070	-.2250	-.2203	-.2575
.274			-.1115				
.339		-.0969					
.362	.1506						
.400				-.0368	-.1024		-.4699
.402			-.1278				
.497	.0000						
.550				.0059	-.1385		
.565			.0000				
.600							-.3442
.650						-.2555	
.700	.1868				-.1702		
.725				-.0404			
.750						.1132	.0548
.760			-.0237				
.775				.2640	.2096		
.808			.2540				
.834	.0879						
.850				.2387	.2436	.2350	
.857			.2336				
.865	.2512						
.900	.2339			.2335			.2243
.905			.2172		.2019		

ARC11-716 IA14 O1+T12+S12N25 UPPER WING (RB1U47)

ALPHAO(1) = -7.960 BETAO (1) = -8.070

SECTION (1)UPPER WING DEPENDENT VARIABLE CP

Y/BW	.2990	.3640	.4270	.5340	.6730	.7800	.8870
X/CW							
.950				.1852		.2026	
.953			.1680				
.965	.1524						

ALPHAO(1) = -7.960 BETAO (2) = -4.010

SECTION (1)UPPER WING DEPENDENT VARIABLE CP

Y/BW	.2990	.3640	.4270	.5340	.6730	.7800	.8870
X/CW							
.000	-.2385	-.1433	.3491	.4212	.3066	.2043	.2285
.020				.5717	.5236	.5474	.5247
.025			.4519				
.040		.1202					
.045			.3996				
.050	-.1195			.3803	.3849	.3971	.3627
.080				.2299			
.085			.2907				
.086		.2790					
.094	-.0941						
.150				.0315	.0572	.0942	.0580
.163		.0000					
.177			.0837				
.193		.2254					
.229	-.0381						
.250				-.1140	-.1280	-.1375	-.1969
.274			-.0160				
.339		-.0041					
.362	.1752						
.400				-.0261	-.1170		-.3267
.402			-.0576				
.497	.0000						
.550				-.0203	-.1470		
.565			.0000				
.600							-.3613
.650						-.2709	
.700	.1540				-.2184		
.725				-.1001			
.750						-.1818	-.1756
.760			-.1346				
.775				.0132	-.0658		
.800			.1207				
.834	-.0578						
.950				.1408	.1304	.1112	

ARC11-716 IA14 O1+T12+S12N25 UPPER WING (RB1U47)

ALPHAO(1) = -7.960 BETAO (2) = -4.010

SECTION (1)UPPER WING DEPENDENT VARIABLE CP

X/CW \ Y/BW	.2990	.3640	.4270	.5340	.6730	.7800	.8870
.857			.1388				
.865	.1239						
.900	.1364			.1615			.1082
.905			.1480		.1461		
.950				.1329		.1419	
.953			.1196				
.965	.0927						

ALPHAO(1) = -7.960 BETAO (3) = .030

SECTION (1)UPPER WING DEPENDENT VARIABLE CP

X/CW \ Y/BW	.2990	.3640	.4270	.5340	.6730	.7800	.8870
.000	-.3118	-.0595	.2975	.3278	.1893	.0716	.0937
.020				.5605	.4967	.5142	.4790
.025			.4285				
.040		.1403					
.045			.3918				
.050	-.1713			.4000	.3992	.3989	.3585
.080				.2742			
.085			.3099				
.086		.2550					
.094	-.1375						
.150				.0942	.1109	.1379	.0866
.163		.0000					
.177			.1415				
.193		.2455					
.229	-.0185						
.250				-.0379	-.0475	-.0622	-.1531
.274			.0473				
.339		.0583					
.362	.1922						
.400				-.0136	-.0978		-.2877
.402			-.0238				
.497	.0000						
.550				-.0336	-.1425		
.565			.0000				
.600							-.3544
.650						-.2740	
.700	.1143				-.2288		
.725				-.1267			
.750						-.2281	-.2525
.760			-.1640				

ARC11-716 IA14 O1+T12+S12N25 UPPER WING (RB1U47)

ALPHAO(1) = -7.980 BETAO (3) = .030

SECTION (1)UPPER WING DEPENDENT VARIABLE CP

Y/BW	.2990	.3640	.4270	.5340	.6730	.7800	.8870
X/CW							
.775				-.1076	-.1657		
.808			-.0871				
.834	-.1050						
.850				-.0392	-.1142	-.1028	
.857			.0003				
.865	-.0370						
.900	.0120			.0686			-.0036
.905			.0567		.0923		
.950				.0846		.0738	
.953			.0581				
.955	.0239						

ALPHAO(1) = -7.980 BETAO (4) = 4.120

SECTION (1)UPPER WING DEPENDENT VARIABLE CP

Y/BW	.2990	.3640	.4270	.5340	.6730	.7800	.8870
X/CW							
.000	-.2977	-.0482	.2328	.2306	.0598	-.0626	-.0491
.020				.5334	.4557	.4592	.4172
.025			.3822				
.040		.0960					
.045			.3635				
.050	-.1854			.4043	.3897	.3784	.3330
.060				.2995			
.085			.3172				
.086		.2150					
.094	-.1452						
.150				.1394	.1392	.1543	.0982
.153		.0000					
.177			.1855				
.193		.2458					
.229	.0015						
.250				.0126	-.0052	-.0242	-.1289
.274			.0928				
.339		.0955					
.352	.1970						
.400				-.0066	-.0816		-.2691
.402			-.0008				
.497	.0000						
.550				-.0517	-.1471		
.565			.0000				
.600							-.3607
.650						-.2811	

ARC11 16 IA14 O1+T12+S12N25 UPPER WING (RB1U47)

ALPHAO(1) = -7.960 BETAO (4) = 4.120

SECTION (1)UPPER WING DEPENDENT VARIABLE CP

Y/BW	.2990	.3640	.4270	.5340	.6730	.7800	.8870
X/CW							
.700	.0773				-.2348		
.725				-.1552			
.750						-.2492	-.2864
.760			-.1896				
.775				-.1500	-.1998		
.808			-.1441				
.834	-.1385						
.850				-.1476	-.1781	-.1781	
.857			-.1120				
.865	-.1269						
.900	-.0687			-.0500			-.0641
.905			-.0179		-.0277		
.950				.0044		-.0474	
.953			-.0107				
.965	-.0509						

ALPHAO(1) = -7.990 BETAO (5) = 8.210

SECTION (1)UPPER WING DEPENDENT VARIABLE CP

Y/BW	.2990	.3640	.4270	.5340	.6730	.7800	.8870
X/CW							
.000	-.3257	-.0871	.0790	.1595	-.0462	-.1602	-.1569
.020				.5055	.4254	.4264	.3719
.025			.3455				
.040		.0128					
.045			.3380				
.050	-.1969			.4036	.3925	.3796	.3282
.080				.3229			
.085			.3065				
.086		.1671					
.094	-.1475						
.150				.1838	.1855	.1920	.1268
.163		.0000					
.177			.2087				
.193		.2235					
.229	-.0189						
.250				.0619	.0481	.0252	-.0782
.274			.1318				
.339		.1129					
.362	.1752						
.400				.0166	-.0517		-.2282
.402			.0222				
.497	.0000						

ARC11-716 IA14 O1+T12+S12N25 UPPER WING (RB1U47)

ALPHAO(1) = -7.990 BETAO (5) = 8.210

SECTION (1)UPPER WING DEPENDENT VARIABLE CP

Y/BW	.2990	.3640	.4270	.5340	.6730	.7800	.8870
X/CW							
.550				-.0565	-.1340		
.565			.0000				
.600							-.3433
.650						-.2644	
.700	.0452				-.2343		
.725				-.1627			
.750						-.2379	-.2910
.760			-.2003				
.775				-.1650	-.2047		
.808			-.1732				
.834	-.1535						
.850				-.1704	-.1866	-.1904	
.857			-.1901				
.865	-.1629						
.900	-.1533			-.1295			-.0865
.905			-.0530		-.0829		
.950				-.0152		-.0805	
.953			-.0295				
.965	-.0761						

ALPHAO(2) = -3.820 BETAO (1) = -8.120

SECTION (1)UPPER WING DEPENDENT VARIABLE CP

Y/BW	.2990	.3640	.4270	.5340	.6730	.7800	.8870
X/CW							
.000	-.0911	.0241	.4941	.6192	.5580	.5070	.5583
.020				.4153	.3939	.4172	.4227
.025			.3506				
.040		.2105					
.045			.2453				
.050	-.1629			.1589	.1517	.1750	.1481
.080				-.0260			
.085			.0730				
.086		.2468					
.094	-.0892						
.150				-.2854	-.2569	-.2037	-.1811
.163		.0000					
.177			-.1522				
.193		.0672					
.229	-.0175						
.250				-.3829	-.4249	-.4309	-.4343
.274			-.2794				
.339		-.2406					

ARC11-716 IA14 O1+T12+S12N25 UPPER WING (RB1U47)

ALPHAO(2) = -3.820 BETAO (1) = -8.120

SECTION (1)UPPER WING DEPENDENT VARIABLE CP

Y/BW	.2990	.3640	.4270	.5340	.6730	.7800	.8870
X/CW							
.362	.0729						
.400				-.5025	-.5907		-.6496
.402			-.4289				
.497	.0000						
.550				-.0686	-.2905		
.565			.0000				
.600							-.6736
.650						-.2559	
.700	.1113				-.1742		
.725				-.0664			
.750						.0035	-.2496
.760			-.0443				
.775				.2237	.1920		
.808			.2352				
.834	.0492						
.850				.2371	.2476	.2100	
.857			.2288				
.865	.2249						
.900	.2256			.2280			.1095
.905			.2130		.1884		
.950				.1768		.1859	
.953			.1619				
.965	.1520						

ALPHAO(2) = -3.830 BETAO (2) = -4.020

SECTION (1)UPPER WING DEPENDENT VARIABLE CP

Y/BW	.2990	.3640	.4270	.5340	.6730	.7800	.8870
X/CW							
.000	-.1837	-.0113	.4426	.5411	.4601	.3905	.4360
.020				.4303	.3856	.4039	.4210
.025			.3497				
.040		.1614					
.045			.2662				
.050	-.2164			.1989	.1613	.1935	.1795
.080				.0247			
.085			.1290				
.086		.2330					
.094	-.1573						
.150				-.1940	-.1882	-.1464	-.1342
.163		.0000					
.177			-.0758				
.193		.1083					

ALPHAO(2) = -3.830 BETAO (2) = -4.020

SECTION (1)UPPER WING DEPENDENT VARIABLE CP

X/CW \ Y/BW	.2990	.3640	.4270	.5340	.6730	.7800	.8870
.229	-.0547						
.250				-.3040	-.3423	-.3381	-.3768
.274			-.1901				
.339		-.1685					
.362	.0967						
.400				-.3764	-.4860		-.5948
.402			-.3326				
.497	.0000						
.550				-.0386	-.1663		
.565			.0000				
.600							-.5962
.650						-.2806	
.700	.1128				-.2269		
.725				-.1286			
.750						-.1275	-.0616
.760			-.1382				
.775				-.0899	-.1177		
.808			-.0372				
.834	-.0959						
.850				.0874	.0996	.1097	
.857			.0809				
.865	.0083						
.900	.0598			.1464			.1398
.905			.1297		.1262		
.950				.1215		.1212	
.953			.1071				
.965	.0766						

ALPHAO(2) = -3.910 BETAO (3) = .030

SECTION (1)UPPER WING DEPENDENT VARIABLE CP

X/CW \ Y/BW	.2990	.3640	.4270	.5340	.6730	.7800	.8870
.000	-.2492	.0003	.3857	.4540	.3530	.2694	.3027
.020				.4317	.3805	.4022	.3968
.025			.3400				
.040		.1548					
.045			.2725				
.050	-.2516			.2286	.2227	.2310	.1918
.080				.0753			
.085			.1614				
.086		.2205					
.094	-.1726						

ARC11-716 IA14 O1+T12+S12N25 UPPER WING (RB1U47)

ALPHAO(2) = -3.910 BETAO (3) = .030

SECTION (1)UPPER WING DEPENDENT VARIABLE CP

Y/BW	.2990	.3640	.4270	.5340	.6730	.7800	.8870
X/CW							
.150				-.1079	-.0901	-.0788	-.1007
.163		.0000					
.177			-.0207				
.193		.1365					
.229	-.0150						
.250				-.2207	-.2639	-.2837	-.3462
.274			-.1059				
.339		-.1085					
.362	.1191						
.400				-.1685	-.2319		-.5108
.402			-.1766				
.497	.0000						
.550				-.0732	-.1894		
.565			.0000				
.600							-.3659
.650						-.3182	
.700	.0749				-.2221		
.725				-.1577			
.750						-.2337	-.1909
.760			-.1865				
.775				-.1475	-.1928		
.808			-.1288				
.834	-.1383						
.850				-.1377	-.1273	-.0465	
.857			.1319				
.865	-.0826						
.900	-.0826			-.0705			.0283
.905			-.0649		.0204		
.950				.0232		.0271	
.953			-.0210				
.965	-.0748						

ALPHAO(2) = -3.910 BETAO (4) = 4.100

SECTION (1)UPPER WING DEPENDENT VARIABLE CP

Y/BW	.2990	.3640	.4270	.5340	.6730	.7800	.8870
X/CW							
.000	-.3729	-.0125	.3000	.3678	.2509	.1566	.1967
.020				.4070	.3545	.3733	.3631
.025			.2887				
.040		.0926					
.045			.2457				
.050	-.2102			.2299	.2249	.2235	.1972

DATE 10 JAN 75 TABULATED PRESSURE DATA - IA14A - VOL. 6

ARC11-716 IA14 O1+T12+S12N25 UPPER WING (RB1U47)

ALPHAO(2) = -3.910 BETAO (4) = 4.100

SECTION (1)UPPER WING DEPENDENT VARIABLE CP

Y/BW	.2990	.3640	.4270	.5340	.6730	.7800	.8870
X/CW							
.080				.1022			
.085			.1613				
.086		.1633					
.094	-.1613						
.150				-.0322	-.0555	-.0461	-.0728
.163		.0000					
.177			.0131				
.193		.1333					
.229	.0144						
.250				-.1620	-.2022	-.2213	-.3034
.274			-.0500				
.339		-.0530					
.362	.1093						
.400				-.1246	-.1766		-.3720
.402			-.1227				
.497	.0000						
.550				-.0956	-.2036		
.565			.0000				
.600							-.3911
.650						-.3312	
.700	.0373				-.2396		
.725				-.1841			
.750						-.2792	-.2404
.760			-.2197				
.775				-.1839	-.2373		
.808			-.1764				
.834	-.1714						
.850				-.1920	-.2153	-.1486	
.857			-.1873				
.865	-.1484						
.900	-.1361			-.1812			-.0406
.905			-.1340		-.1071		
.950				-.0960		-.0374	
.953			-.1123				
.965	-.1416						

ARC11-716 IA14 O1+T12+S12N25 UPPER WING (RB1U47)

ALPHAO(2) = -3.920 BETAO (5) = 8.180

SECTION (1)UPPER WING DEPENDENT VARIABLE CP

X/CW \ Y/BW	.2990	.3640	.4270	.5340	.6730	.7800	.8870
.000	-.3042	-.0627	.1066	.3301	.1662	.0611	.1162
.020				.3945	.3517	.3809	.3641
.025			.1880				
.040		-.0345					
.045			.2188				
.050	-.2424			.2528	.2659	.2606	.2247
.080				.1533			
.085			.2177				
.086		.1000					
.094	-.1438						
.150				.0165	.0237	.0385	-.0182
.163		.0000					
.177			.0727				
.193		.1453					
.229	.0168						
.250				-.0833	-.1134	-.1289	-.2239
.274			.0009				
.339		.0068					
.362	.1193						
.400				-.0781	-.1417		-.3358
.402			-.0765				
.497	.0000						
.550				-.0966	-.1914		
.565			.0000				
.600							-.3977
.650						-.3227	
.700	.0217				-.2338		
.725				-.1939			
.750						-.2831	-.2795
.760			-.2248				
.775				-.1989	-.2438		
.808			-.1985				
.834	-.1814						
.850				-.2070	-.2334	-.2122	
.857			-.2248				
.865	-.1795						
.900	-.1744			-.2032			-.0786
.905			-.1539		-.1720		
.950				-.1353		-.0794	
.953			-.1198				
.965	-.1641						

ARC11-716 IA14 O1+T12+S12N25 UPPER WING (RB1U47)

ALPHAO(3) = .020 BETAO (1) = -8.130

SECTION (1)UPPER WING DEPENDENT VARIABLE CP

Y/BW	.2990	.3640	.4270	.5340	.6730	.7800	.8870
X/CW							
.000	-.0478	.0246	.5220	.7098	.6947	.6606	.6762
.020				.2540	.2460	.2234	.1887
.025			.2258				
.040		.1658					
.049			.0989				
.050	-.1558			-.0122	-.0224	-.0455	-.1078
.080				-.2116			
.085			-.0990				
.086		.1782					
.094	-.1626						
.150				-.4394	-.4405	-.3909	-.3722
.163		.0000					
.177			-.2650				
.193		-.0382					
.229	-.0682						
.250				-.5289	-.6007	-.6064	-.5721
.274			-.3725				
.339		-.3046					
.362	.0202						
.400				-.5972	-.7412		-.7771
.402			-.5307				
.497	.0000						
.590				-.3108	-.7518		
.565			.0000				
.600							-.8112
.650						-.6704	
.700	-.0635				-.2242		
.725				-.1761			
.750						-.4100	-.5645
.760			-.1668				
.775				.0472	-.1449		
.808			.1064				
.834	-.0711						
.850				.1609	-.0251	-.3332	
.857			.1647				
.865	.1018						
.900	.1658			.1845			-.3586
.909			.1717		.0615		
.950				.1484		-.2034	
.953			.1318				
.965	.1208						

ARC11-716 IA14 O1+T12+S12N2! UPPER WING (RB1U47)

ALPHAO(3) = .000 BETAO (2) = -4.060

SECTION (1)UPPER WING DEPENDENT VARIABLE CP

Y/BW	.2990	.3640	.4270	.5340	.6730	.7800	.8870
X/CW							
.000	-.1317	-.0302	.4812	.6469	.6076	.5751	.6044
.020				.2914	.2538	.2370	.1968
.025			.2480				
.040		.1500					
.045			.1456				
.050	-.2508			.0413	.0030	-.0172	-.0827
.080				-.1432			
.085			-.0165				
.086		.1900					
.094	-.2144						
.150				-.3650	-.3998	-.3591	-.3469
.163		.0000					
.177			-.2027				
.193		.0268					
.229	-.0732						
.250				-.4531	-.5277	-.5490	-.5541
.274			-.3111				
.339		-.2601					
.362	.0380						
.400				-.5534	-.6612		-.7446
.402			-.4769				
.497	.0000						
.550				-.1927	-.4689		
.565			.0000				
.600							-.7692
.690						-.5419	
.700	.0217				-.2390		
.725				-.1452			
.750						-.2173	-.4606
.760			-.1859				
.775				-.0982	-.0924		
.808			-.0800				
.834	-.1106						
.850				-.0114	.0310	-.0098	
.857			-.0521				
.865	-.0384						
.900	-.0387			.0885			-.2907
.905			.0710		.0797		
.950				.0899		.0560	
.953			.0767				
.965	.0504						

ARC11-716 IA14 O1+T12+S12N25 UPPER WING (RB1U47)

ALPHAO(3) = -.330 BETAO (3) = .040

SECTION (1)UPPER WING DEPENDENT VARIABLE CP

X/CW \ Y/BW	.2590	.3640	.4270	.5340	.6730	.7800	.8870
.000	-.2618	-.0169	.4155	.5494	.4845	.4537	.5092
.020				.3054	.2480	.2512	.2259
.025			.2427				
.040		.1487					
.045			.1644				
.050	-.2995			.0819	.03[illegible]	.0335	-.0361
.080				-.0796			
.085			.0402				
.086		.1860					
.094	-.2115						
.150				-.28[illegible]7	-.3097	-.2926	-.2948
.163		.0000					
.177			-.1393				
.193		.0567					
.229	.0078						
.250				-.3744	-.4234	-.4685	-.5009
.274			-.2453				
.339		-.2051					
.362	.0761						
.400				-.4453	-.5612		-.6713
.402			-.3031				
.497	.0000						
.550				-.1001	-.2278		
.565			.0000				
.600							-.6771
.650						-.3166	
.700	.0365				-.2335		
.725				-.1741			
.750						-.1908	-.2718
.760			-.2064				
.775				-.1627	-.1969		
.800			-.1451				
.834	-.1517						
.850				-.1539	-.0972	-.0014	
.857			-.1558				
.865	-.0908						
.900	-.1075			-.1027			.0933
.905			-.1071		.0037		
.950				-.0091		.0399	
.953			-.0620				
.965	-.1216						

ARC11-716 IA14 O1+T12+S12N25 UPPER WING (RB1U47)

ALPHAO(3) = .060 BETAO (4) = 4.100

SECTION (1)UPPER WING DEPENDENT VARIABLE CP

Y/BW	.2990	.3640	.4270	.5340	.6730	.7600	.8870
X/CW							
.000	-.4117	-.0706	.3065	.4763	.4047	.3749	.4376
.020				.2588	.1976	.2087	.1900
.025			.1702				
.040		.0650					
.045			.1081				
.050	-.3155			.0562	.0216	.0096	-.0449
.080				-.0844			
.085			.0177				
.086		.1145					
.094	-.1808						
.150				-.2630	-.2826	-.2699	-.2850
.163		.0000					
.177			-.1308				
.193		.0396					
.229	.0246						
.250				-.3409	-.3960	-.4134	-.4784
.274			-.2239				
.339		-.1811					
.362	.0592						
.400				-.2590	-.3846		-.6544
.402			-.2652				
.497	.0000						
.550				-.1331	-.2448		
.565			.0000				
.600							-.3980
.650						-.3602	
.700	.0002				-.2489		
.725				-.2091			
.750						-.2770	-.1856
.760			-.2448				
.775				-.2084	-.2533		
.808			-.1912				
.834	-.1882						
.850				-.2176	-.2087	-.0890	
.857			-.2153				
.865	-.1593						
.900	-.1640			-.2086			.0073
.905			-.1897		-.0807		
.950				-.1466		-.0210	
.953			-.1685				
.965	-.2005						

ARC11-716 IA14 O4+T12+S12N25 UPPER WING (RB1U47)

ALPHAO(3) = .070 BETAO (5) = 8.180

SECTION (1)UPPER WING DEPENDENT VARIABLE CP

Y/BW	.2990	.3640	.4270	.5340	.6730	.7800	.8870
X/CW							
.000	-.6544	-.0980	.0865	.2946	.3428	.2918	.3425
.020				.2090	.2146	.2359	.2162
.025			.0627				
.040		-.0358					
.045			.0393				
.050	-.3819			.0780	.0737	.0687	.0064
.080				-.0285			
.085			.0041				
.086		-.0747					
.094	-.2031						
.150				-.1516	-.1775	-.1756	-.2170
.163		.0000					
.177			-.0570				
.193		.0791					
.229	.0167						
.250				-.2220	-.2928	-.3334	-.4215
.274			-.1109				
.339		-.1196					
.362	.0451						
.400				-.1757	-.2632		-.5113
.402			-.1655				
.497	.0000						
.550				-.1514	-.2558		
.585			.0000				
.600							-.4298
.650						-.3755	
.700	-.0181				-.2547		
.725				-.2413			
.750						-.3044	-.2533
.780			-.2402				
.775				-.2395	-.2778		
.800			-.2214				
.834	-.2081						
.850				-.2543	-.2518	-.1637	
.857			-.2502				
.865	-.2007						
.900	-.2074			-.2397			-.0547
.905			-.2153		-.1396		
.950				-.1882		-.0656	
.953			-.1943				
.965	-.2329						

ARC11-716 IA14 OL+T1P-[illegible] UPPER WING (RB1U47)

ALPHAO(4) = 4.120 BETAO (1) = -8.110

SECTION (1)UPPER WING DEPENDENT VARIABLE CP

Y/BW	.2990	.3640	.4270	.5340	.6730	.7800	.8870
X/CW							
.000	-.0314	-.0839	.4927	.7200	.7105	.6631	.6333
.020				.0512	.0339	-.0542	-.1376
.025			.0764				
.040		.0616					
.045			-.0676				
.050	-.1387			-.1990	-.2390	-.2868	-.3937
.080				-.3775			
.085			-.2657				
.086		.0874					
.094	-.1737						
.150				-.6174	-.6213	-.5995	-.5925
.163		.0000					
.177			-.3689				
.193		-.1330					
.229	-.1069						
.250				-.6738	-.7693	-.7648	-.7355
.274			-.4853				
.339		-.3754					
.362	.0097						
.400				-.7194	-.8971		-.8983
.402			-.6145				
.497	.0000						
.550				-.7262	-.9000		
.565			.0000				
.600							-.8215
.650						-.7363	
.700	-.4180				-.2835		
.725				-.2885			
.750						-.5307	-.6636
.760			-.2157				
.775				-.1866	-.5397		
.808			-.0253				
.834	-.0872						
.850				-.0595	-.3787	-.4181	
.857			.0312				
.865	-.0426						
.900	.0016			.0249			-.6634
.905			.1046		-.1800		
.950				.0565		-.4040	
.953			.1088				
.965	.0980						

ARC11-716 IA14 O1+T12+S12:25 UPPER WING (RB1U47)

ALPHAO(4) = 4.100 BETAO (2) = -4.030

SECTION (1)UPPER WING DEPENDENT VARIABLE CP

Y/BW	.2990	.3640	.4270	.5340	.6730	.7800	.8870
X/CW							
.000	-.1411	-.1658	.4646	.6860	.6552	.6023	.5806
.020				.1031	.0600	-.0302	-.1294
.025			.1159				
.040		.1019					
.045			-.0106				
.050	-.2275			-.1478	-.2052	-.2084	-.3720
.080				-.3188			
.085			-.1628				
.086		.1333					
.094	-.2522						
.150				-.5298	-.5725	-.5618	-.5800
.163		.0000					
.177			-.3172				
.193		-.0581					
.229	-.0347						
.250				-.5985	-.7217	-.7337	-.7248
.274			-.4185				
.339		-.3335					
.362	.0555						
.400				-.6574	-.8288		-.8778
.402			-.5675				
.497	.0000						
.550				-.4435	-.8315		
.565			.0000				
.600							-.9538
.650						-.7716	
.700	-.2222				-.2610		
.725				-.3111			
.750						-.5165	-.6327
.760			-.2382				
.775				-.1826	-.2693		
.808			-.1024				
.834	-.1192						
.850				-.0788	-.1927	-.4753	
.857			-.1169				
.865	-.0968						
.900	-.0997			-.0240			-.5335
.905			-.0813		-.07[illegible]		
.950				-.0055		-.4092	
.5[illegible]			-.0433				
.965	-.1333						

ARC11-718 IA14 O1+T12+S12N25 UPPER WING (RB1U47)

ALPHAO(4) = 4.100 BETAO (3) = .040

SECTION (1)UPPER WING DEPENDENT VARIABLE CP

Y/BW	.2990	.3640	.4270	.5340	.6730	.7800	.8870
X/CW							
.000	-.2720	-.1041	.3969	.6144	.5917	[illegible]	.5230
.020				.1136	.0696	-.0181	-.1228
.025			.1113				
.040		.0962					
.045			.0106				
.050	-.3270			-.1147	-.1781	-.2371	-.3535
.080				-.2789			
.085			-.1364				
.088		.1292					
.094	-.3133						
.150				-.4595	[illegible]	-.5139	-.5506
.165		.0000					
.177			-.2657				
.193		-.0332					
.229	.0656						
.250				-.5176	-.6354	-.6949	-.6957
.274			-.3621				
.339		-.2933					
.362	.0559						
.400				-.6068	[illegible]		-.8539
.402			-.5208				
.497	.0000						
.550				-.3217	-.7351		
.565			.0000				
.600							-.8275
.650						-.7368	
.700	-.1171				-.2521		
.725				-.2200			
.750						-.5457	-.6209
.760			-.2563				
.775				-.1651	-.2588		
.808			-.1620				
.834	-.1512						
.850				-.1508	-.0850	-.1124	
.857			-.1960				
.865	-.1455						
.900	-.1502			-.1185			-.3895
.905			-.1692		-.0143		
.950				-.0702		-.0323	
.953			-.1310				
.965	-.2003						

ARC11-716 IA14 O1+T12+S12N25 UPPER WING (RB1U47)

ALPHAO(4) = 4.090 BETAO (4) = 4.130

SECTION (1)UPPER WING DEPENDENT VARIABLE CP

Y/BW	.2990	.3640	.4270	.5340	.6730	.7600	.8870
X/CW							
.000	-.4497	-.1740	.2398	.5084	.5083	.4635	.4704
.020				.1096	.0527	-.0258	-.1201
.025			.0594				
.040		.0202					
.045			-.0088				
.050	-.3971			-.0918	-.1759	-.2344	-.3411
.080				-.2432			
.085			-.0985				
.086		.0576					
.094	-.2252						
.150				-.4095	-.5043	-.4937	-.5271
.163		.0000					
.177			-.2263				
.193		-.0297					
.229	.0274						
.250				-.4685	-.5767	-.6466	-.6808
.274			-.3160				
.339		-.2607					
.362	.0310						
.400				-.5381	-.6770		-.8312
.402			-.4540				
.497	.0000						
.550				-.1961	-.3943		
.565			.0000				
.600							-.7955
.650						-.4039	
.700	-.0670				-.2581		
.725				-.2281			
.750						-.2694	-.4444
.760			-.2727				
.775				-.2179	-.2390		
.808			-.2113				
.834	-.1975						
.850				-.2303	-.1695	-.0929	
.857			-.2479				
.865	-.1935						
.900	-.1972			-.2184			-.1638
.905			-.2325		-.0674		
.950				-.1620		-.0281	
.953			-.2096				
.965	-.2462						

ARC11-716 IA14 01+T12+S12N25 UPPER WING (RB1U47)

ALPHAO(4) = 4.080 BETAO (5) = 8.230

SECTION (1)UPPER WING DEPENDENT VARIABLE CP

Y/BW	.2990	.3640	.4270	.5340	.6730	.7800	.8870
X/CW							
.000	-.7655	-.1117	.0513	.2156	.4402	.4185	.4436
.020				.0011	.0776	.0166	-.0680
.025			.0013				
.040		-.0586					
.045			-.0276				
.050	-.4696			-.1077	-.1176	-.1855	-.2829
.080				-.1925			
.085			-.0709				
.086		-.0530					
.094	-.3557						
.150				-.2976	-.3932	-.4182	-.4636
.163		.0000					
.177			-.1713				
.193		.0089					
.229	.0317						
.250				-.3767	-.4804	-.5460	-.6128
.274			-.2598				
.339		-.2160					
.362	.0303						
.400				-.2270	-.3513		-.7394
.402			-.2433				
.497	.0000						
.550				-.1867	-.3085		
.565			.0000				
.600							-.4553
.650						-.4056	
.700	-.0570				-.2686		
.725				-.2643			
.750						-.3077	-.2520
.760			-.2780				
.775				-.2579	-.2903		
.808			-.2554				
.834	-.2251						
.850				-.2647	-.2391	-.1312	
.857			-.2764				
.865	-.2308						
.900	-.2406			-.2296			-.0711
.905			-.2376		-.1137		
.950				-.1818		-.0605	
.953			-.2029				
.965	-.2803						

ARC11-716 IA14 O1+T12+S12N25 UPPER WING (RB1U47)

ALPHAO(5) = 8.050 BETAO (1) = -8.090

SECTION (1)UPPER WING DEPENDENT VARIABLE CP

Y/BW	.2990	.3640	.4270	.5340	.6730	.7800	.8870
X/CW							
.000	.0091	-.1624	.4381	.7371	.6804	.5763	.5252
.020				-.1535	-.1727	-.3001	-.4074
.025			-.1013				
.040		-.0618					
.045			.2516				
.050	-.1417			-.3758	-.4390	-.5099	-.6323
.080				-.5476			
.085			-.4133				
.086		-.0484					
.094	-.1493						
.150				-.7827	-.7709	-.7715	-.7837
.163		.0000					
.177			-.5260				
.193		-.2290					
.229	-.1198						
.250				-.8711	-.9011	-.8424	-.8702
.274			-.5765				
.339		-.4375					
.362	-.0186						
.400				-.9022	-.9211		-.8571
.402			-.6756				
.497	.0000						
.550				-.7211	-.7734		
.565			.0000				
.600							-.7170
.650						-.7231	
.700	-.5875				-.3061		
.725				-.4278			
.750						-.5950	-.6804
.760			-.2601				
.775				-.4641	-.6378		
.800			-.1524				
.834	-.0425						
.850				-.3350	-.5954	-.4989	
.857			-.1243				
.865	.0303						
.900	.0152			-.2184			-.6746
.905			-.0571		-.5159		
.950				-.1431		-.4745	
.953			-.0125				
.965	-.0676						

ARC11-718 IA14 O1+T12+S12N25 UPPER WING (R81U47)

ALPHAO(5) = 8.030 BETAO (2) = -4.040

SECTION (1)UPPER WING DEPENDENT VARIABLE CP

Y/BW	.2990	.3640	.4270	.5340	.6730	.7800	.8870
X/CW							
.000	-.1200	-.3277	.4250	.7025	.6556	.5488	.4807
.020				-.0822	-.1307	-.2752	-.4103
.025			-.0099				
.040		-.1120					
.045			-.1450				
.050	-.2373			-.3059	-.3938	-.4841	-.6290
.080				-.4695			
.085			-.3124				
.086		.0625					
.094	-.2442						
.150				-.7046	-.7273	-.7475	-.7765
.163		.0000					
.177			-.4159				
.193		-.1279					
.229	-.1681						
.250				-.7449	-.8630	-.8817	-.8753
.274			-.5069				
.339		-.3828					
.362	.0428						
.400				-.7449	-.9572		-.9104
.402			-.6309				
.497	.0000						
.550				-.7610	-.8308		
.565			.0000				
.600							-.7445
.650						-.7441	
.700	-.5526				-.2991		
.725				-.3240			
.750						-.5972	-.6973
.760			-.2531				
.775				-.2744	-.6121		
.808			-.0821				
.834	-.1211						
.850				-.2045	-.5250	-.4645	
.857			-.1156				
.865	-.1273						
.900	-.0836			-.1382			-.6989
.905			-.0993		-.3840		
.950				-.0960		-.4504	
.953			-.0811				
.965	-.1388						

ARC11-718 IA14 O1+T12+S12N25 UPPER WING (RB1U47)

ALPHAO(5) = 8.030 BETAO (3) = .020

SECTION (1)UPPER WING DEPENDENT VARIABLE CP

Y/BW	.2990	.3640	.4270	.5340	.6730	.7800	.8870
X/CW							
.000	-.2758	-.2616	.3531	.6272	.6096	.5081	.4390
.020				-.0340	-.1105	-.2636	-.4105
.025			-.0030				
.040		.0377					
.045			-.1187				
.050	-.3314			-.2588	-.3644	-.4642	-.6221
.080				-.4207			
.085			-.2455				
.086		.0711					
.094	-.3200						
.150				-.6203	-.6964	-.7235	-.7671
.163		.0000					
.177			-.3598				
.193		-.0964					
.229	.0657						
.250				-.6552	-.8224	-.8548	-.8638
.274			-.4518				
.339		-.3473					
.362	.0286						
.400				-.6905	-.9089		-.9770
.402			-.5798				
.497	.0000						
.550				-.6056	-.8812		
.565			.0000				
.600							-.8286
.650						-.7878	
.700	-.3735				-.2838		
.725				-.3334			
.750						-.5840	-.7637
.760			-.2079				
.775				-.2556	-.3765		
.808			-.1893				
.834	-.1516						
.850				-.1826	-.2369	-.5177	
.857			-.2178				
.865	-.1872						
.900	-.1972			-.1331			-.7606
.905			-.1955		-.1207		
.950				-.1077		-.5464	
.953			-.1686				
.965	-.2525						

DATE 10 JAN 75 TABULATED PRESSURE DATA - IA14A - VOL. 6

ARC11-716 IA14 O1+T12+S12N25 UPPER WING (RB1U47)

ALPHAO(5) = 8.020 BETAO (4) = 4.170

SECTION (1)UPPER WING DEPENDENT VARIABLE CP

Y/BW	.2990	.3640	.4270	.5340	.6730	.7800	.8870
X/CW							
.000	-.4702	-.2252	.1004	.4809	.5304	.4556	.3810
.020				-.1001	-.1204	-.2639	-.4219
.025			-.0561				
.040		-.0580					
.045			-.1372				
.050	-.4015			-.2795	-.3622	-.4535	-.6258
.080				-.4108			
.085			-.1981				
.086		-.0221					
.094	-.3471						
.150				-.5566	-.6743	-.7012	-.7564
.163		.0000					
.177			-.3028				
.193		-.1006					
.229	.0119						
.250				-.5683	-.7824	-.8289	-.8536
.274			-.3786				
.339		-.3116					
.362	-.0163						
.400				-.6274	-.8141		-.9676
.402			-.4982				
.497	.0000						
.550				-.3481	-.7505		
.565			.0000				
.600							-.8814
.650						-.7904	
.700	-.1456				-.2849		
.725				-.2813			
.750						-.5862	-.7436
.760			-.3050				
.775				-.2637	-.2986		
.808			-.2692				
.834	-.2381						
.850				-.2604	-.1482	-.1485	
.851			-.2933				
.865	-.2392						
.900	-.2423			-.2176			-.6884
.905			-.2799		-.0752		
.950				-.1843		-.1008	
.953			-.2344				
.965	-.2858						

ARC11-716 IA14 O1+T12+S12M25 UPPER WING (RB1U47)

ALPHAO(5) = 8.020 BETAO (5) = 8.260

SECTION (1)UPPER WING DEPENDENT VARIABLE CP

X/CW \ Y/BW	.2990	.3640	.4270	.5340	.6730	.7800	.8870
.000	-.7681	-.1369	-.0548	.0426	.4183	.4261	.3656
.020				-.2506	-.1627	-.2384	-.3944
.025			-.0734				
.040		-.0862					
.045			-.0979				
.050	-.7152			-.2985	-.3582	-.4273	-.5944
.080				-.3513			
.085			-.1413				
.086		-.0644					
.094	-.6171						
.150				-.3982	-.5984	-.6618	-.7228
.163		.0000					
.177			-.2358				
.193		-.1440					
.229	.0065						
.250				-.4496	-.6459	-.7776	-.8250
.274			-.3160				
.339		-.2830					
.362	-.0016						
.400				-.3227	-.6452		-.9288
.402			-.3022				
.497	.0000						
.550				-.2518	-.3917		
.565			.0000				
.600							-.8672
.650						-.4426	
.700	-.1035				-.2940		
.725				-.3014			
.750						-.3137	-.6037
.760			-.3252				
.775				-.3119	-.3215		
.808			-.3216				
.834	-.2754						
.850				-.2795	-.2170	-.1095	
.857			-.3129				
.865	-.2926						
.900	-.2993			-.2263			-.2644
.905			-.2809		-.1023		
.950				-.1945		-.0457	
.953			-.2047				
.965	-.2364						

ARC11-716 IA14 O1+T12+S12N25 UPPER WING (RB1U48) (15 FEB 74)

REFERENCE DATA

SREF = 4210 SQ.FT. XMRP = 29.5800 INCHES
LREF = 38.7090 INCHES YMRP = .0000 INCHES
BREF = 38.7090 INCHES ZMRP = .0000 INCHES
SCALE = .0300 SCALE

PARAMETRIC DATA

MACH = 1.100 ELEVON = .000
RUDDER = .000 SPOBRK = .000

ALPHAO(1) = -7.930 BETAO (1) = -8.080

SECTION (1)UPPER WING DEPENDENT VARIABLE CP

Y/BW	.2990	.3640	.4270	.5340	.6730	.7800	.8870
X/CW							
.000	-.1111	-.0495	.4303	.5374	.4505	.3740	.4090
.020				.5924	.5533	.5713	.5707
.025			.4873				
.041		.0732					
.045			.4189				
.050	-.0082			.3737	.3733	.3878	.3632
.080				.1979			
.085			.2773				
.086		.2812					
.094	-.0113						
.150				-.0475	-.0109	.0375	.0336
.163		.0000					
.177			.0446				
.193		.2189					
.229	.0319						
.250				-.1907	-.2085	-.2066	-.2377
.274			-.0861				
.339		-.0816					
.362	.1747						
.400				-.3369	-.3990		-.4716
.402			-.2886				
.497	.0000						
.550				.0760	-.0486		
.565			.0000				
.600							-.5186
.650						-.1452	
.700	.2097				-.1596		
.725				-.0135			
.750						.0239	-.0352
.760			-.0551				
.775				.2134	.1346		
.808			.2620				
.834	.0865						
.850				.2544	.2458	.2280	
.857			.2568				
.865	.2651						
.900	.2567			.2615			.2433
.905			.2499		.2302		

ARC11-716 IA14 O1+T12+S12N25 UPPER WING (RB1U48)

ALPHAO(1) = -7.930 BETAO (1) = -8.080

SECTION (1)UPPER WING DEPENDENT VARIABLE CP

Y/BW	.2990	.3640	.4270	.5340	.6730	.7800	.8870
X/CW							
.950				.2236		.2263	
.953			.2110				
.965	.1934						

ALPHAO(1) = -7.950 BETAO (2) = -4.020

SECTION (1)UPPER WING DEPENDENT VARIABLE CP

Y/BW	.2990	.3640	.4270	.5340	.6730	.7800	.8870
X/CW							
.000	-.1861	-.1259	.3514	.4440	.3418	.2532	.2877
.020				.5739	.5165	.5477	.5384
.025			.4520				
.040		.0125					
.045			.4012				
.050	-.0701			.3758	.3715	.3913	.3680
.080				.2162			
.085			.2889				
.086		.1910					
.094	-.0516						
.150				.0014	.0415	.0819	.0683
.163		.0000					
.177			.0799				
.193		.2156					
.229	-.0211						
.250				-.1471	-.1497	-.1412	-.1805
.274			-.0461				
.339		-.0481					
.362	.1568						
.400				.0250	-.0227		-.2096
.402			-.0670				
.497	.0000						
.550				.0403	-.0841		
.565			.0000				
.600							-.3056
.650						-.2131	
.700	.1932				-.1976		
.725				-.0428			
.750						-.1519	-.2001
.760			-.0806				
.775				-.0074	-.0757		
.800			.0600				
.834	-.0174						
.850				.1246	.0363	.0204	

ARC11-716 IA14 O1+T12+S12N25 UPPER WING (RB1U48)

ALPHAO(1) = -7.950 BETAO (2) = -4.020

SECTION (1)UPPER WING DEPENDENT VARIABLE CP

Y/BW	.2990	.3640	.4270	.5340	.6730	.7800	.8870
X/CW							
.857			.1361				
.865	.1110						
.900	.1370			.1762			.0667
.905			.1609		.1774		
.950				.1669		.1509	
.953			.1480				
.965	.1184						

ALPHAO(1) = -7.920 BETAO (3) = .040

SECTION (1)UPPER WING DEPENDENT VARIABLE CP

Y/BW	.2990	.3640	.4270	.5340	.6730	.7800	.8870
X/CW							
.000	-.2476	-.1048	.2814	.3505	.2239	.1207	.1458
.020				.5459	.4907	.5246	.5052
.025			.3990				
.040		.0359					
.045			.3660				
.050	-.1132			.3808	.3946	.4033	.3833
.080				.2502			
.085			.2820				
.086		.1965					
.094	-.0890						
.150				.0835	.1118	.1565	.1271
.163		.0000					
.177			.1154				
.193		.2153					
.229	-.0196						
.250				-.0454	-.0344	-.0236	-.0972
.274			.0504				
.339		.0251					
.362	.1610						
.400				.0278	-.0307		-.2320
.402			-.0109				
.497	.0000						
.550				.0228	-.0837		
.565			.0000				
.600							-.2976
.650						-.2121	
.700	.1664				-.2038		
.725				-.0691			
.750						-.1645	-.2186
.760			-.1043				

ARC11-716 IA14 O1+T12+S12N25 UPPER WING (RB1U48)

ALPHAO(1) = -7.920 BETAO (3) = .040

SECTION (1)UPPER WING DEPENDENT VARIABLE CP

Y/BW	.2990	.3640	.4270	.5340	.6730	.7800	.8870
X/CW							
.775				-.0540	-.1069		
.808			-.0292				
.834	-.0380						
.850				-.0394	-.0818	-.0819	
.857			-.0085				
.865	.0224						
.900	.0417			.0566			.0069
.905			.0641		.0636		
.950				.0934		.0439	
.953			.0737				
.965	.0488						

ALPHAO(1) = -7.930 BETAO (4) = 4.090

SECTION (1)UPPER WING DEPENDENT VARIABLE CP

Y/BW	.2990	.3640	.4270	.5340	.6730	.7800	.8870
X/CW							
.000	-.2615	-.0634	.2244	.2626	.1129	.0040	.0190
.020				.5265	.4679	.4860	.4510
.025			.3465				
.040		.0246					
.045			.3318				
.050	-.1826			.3976	.4052	.4026	.3654
.080				.2943			
.085			.2918				
.086		.1336					
.094	-.1299						
.150				.1442	.1679	.1916	.1392
.163		.0000					
.177			.1090				
.193		.2022					
.229	-.0164						
.250				.0351	.0347	.0207	-.0706
.274			.1057				
.339		.0910					
.362	.1302						
.400				.0345	-.0216		-.2072
.402			.0257				
.497	.0000						
.550				.0843	-.0830		
.565			.0000				
.600							-.2976
.650						-.2123	

ARC11-716 IA14 D1+T12+S12N25 UPPER WING (RB1U48)

ALPHAO(1) = -7.930 BETAO (4) = 4.090

SECTION (1)UPPER WING DEPENDENT VARIABLE CP

Y/BW	.2990	.3640	.4270	.5340	.6730	.7800	.8870
X/CW							
.700	.1236				-.2156		
.725				-.0905			
.750						-.1795	-.2427
.750			-.1354				
.775				-.0851	-.1343		
.808			-.0954				
.834	-.0735						
.850				-.0929	-.1235	-.1317	
.857			-.0988				
.865	-.0652						
.900	-.0355			-.0598			-.0476
.905			-.0066		-.0580		
.950				.0289		-.0297	
.953			.0045				
.965	-.0244						

ALPHAO(1) = -7.950 BETAO (5) = 8.230

SECTION (1)UPPER WING DEPENDENT VARIABLE CP

Y/BW	.2990	.3640	.4270	.5340	.6730	.7800	.8870
X/CW							
.000	-.3239	-.1046	.1133	.1834	-.0011	-.1125	-.1156
.020				.4779	.4155	.4282	.3825
.025			.2893				
.040		-.0166					
.045			.2708				
.050	-.1788			.3852	.3849	.3838	.3389
.080				.3025			
.085			.2550				
.086		.0850					
.094	-.1349						
.150				.1757	.1921	.2073	.1509
.163		.0000					
.177			.1851				
.193		.1581					
.229	-.0467						
.250				.0677	.0691	.0520	-.0425
.274			.1337				
.339		.0997					
.362	.1007						
.400				.0411	-.0124		-.1866
.402			.0459				
.497	.0000						

ARC11-716 IA14 OI+T12+S12N25 UPPER WING (RB1U48)

ALPHAO(1) = -7.950 BETAO (5) = 8.230

SECTION (1)UPPER WING DEPENDENT VARIABLE CP

X/CW \ Y/BW	.2990	.3640	.4270	.5340	.6730	.7800	.8870
.550				-.0169	-.0873		
.565			.0000				
.600							-.2999
.650						-.2119	
.700	.0828				-.2117		
.725				-.1109			
.750						-.1851	-.2618
.760			-.1493				
.775				-.1139	-.1504		
.808			-.1299				
.834	-.1012						
.850				-.1240	-.1494	-.1553	
.857			-.1672				
.865	-.1115						
.900	-.1261			-.1341			-.0973
.935			-.1017		-.1101		
.950				-.0618		-.0792	
.953			-.0296				
.965	-.0690						

ALPHAO(2) = -3.940 BETAO (1) = -8.110

SECTION (1)UPPER WING DEPENDENT VARIABLE CP

X/CW \ Y/BW	.2990	.3640	.4270	.5340	.6730	.7800	.8870
.000	-.0981	.0040	.5210	.6372	.5687	.5125	.5470
.020				.4756	.4474	.4609	.4681
.025			.4034				
.040		.1188					
.045			.3075				
.050	-.1054			.2297	.2173	.2302	.2088
.080				.0464			
.085			.1358				
.086		.2694					
.094	-.0827						
.150				-.2158	-.1931	-.1412	-.1142
.163		.0000					
.177			-.0841				
.193		.1303					
.229	-.0077						
.240				-.3347	-.3672	-.3647	-.3665
.274			-.2236				
.339		-.1731					

ARC11 Y16 IA14 D1+T12+S12N25 UPPER WING (RB1U48)

ALPHAO(2) = -3.940 BETAO (1) = -8.110

SECTION (. UPPER WING DEPENDENT VARIABLE CP

Y/BW	.2990	.3640	.4270	.5340	.6730	.7800	.8870
X/CW							
.362	.1285						
.400				-.4619	-.5360		-.5084
.402			-.3980				
.497	.0000						
.550				-.1655	-.5779		
.565			.0000				
.600							-.6228
.650						-.6547	
.700	.0696				-.1946		
.725				.0779			
.750						-.1950	-.3387
.760			-.0982				
.775				.0675	-.0370		
.808			.1200				
.834	.0026						
.850				.1950	.1308	-.1166	
.857			.1982				
.865	.1353						
.900	.1847			.2299			-.2190
.905			.2210		.2066		
.950				.2025		.04 9	
.953			.1930				
.965	.1726						

ALPHAO(2) = -3.960 BETAO (2) = -4.020

SECTION (1)UPPER WING DEPENDENT VARIABLE CP

Y/BW	.2990	.3640	.4270	.5340	.6730	.7800	.8870
X/CW							
.000	-.1282	-.0440	.4472	.5552	.4734	.4034	.4409
.020				.4617	.4127	.4247	.4296
.025			.3747				
.040		.0642					
.045			.2914				
.050	-.1528			.2338	.2143	.2170	.1900
.080				.0629			
.085			.1549				
.086		.1933					
.094	-.1011						
.150				-.1660	-.1615	-.1221	-.1140
.163		.0000					
.177			-.0520				
.193		.1265					

ARC11-716 IA14 O1+T12+S12N25 UPPER WING (RB1U48)

ALPHAO(2) = -3.960 BETAO (2) = -4.020

SECTION (1)UPPER WING DEPENDENT VARIABLE CP

Y/BW	.2990	.3640	.4270	.5340	.6730	.7800	.8870
X/CW							
.229	-.0213						
.250				-.2904	-.3175	-.3223	-.3571
.274			-.1763				
.339		-.1384					
.362	.1077						
.400				-.4217	-.4929		-.5682
.402			-.3543				
.497	.0000						
.550				-.0169	-.1673		
.565			.0000				
.600							-.6125
.650						-.2513	
.700	.1309				-.2036		
.725				-.0626			
.750						-.1107	-.2162
.760			-.1028				
.775				-.0402	-.0838		
.808			-.0110				
.834	-.0397						
.850				-.0193	.0091	.0860	
.857			.0021				
.865	.0479						
.900	.0470			.0938			.1302
.905			.0861		.1332		
.950				.1429		.1253	
.953			.1250				
.965	.0747						

ALPHAO(2) = -3.890 BETAO (3) = .050

SECTION (1)UPPER WING DEPENDENT VARIABLE CP

Y/BW	.2990	.3640	.4270	.5340	.6730	.7800	.8870
Y/CW							
.000	-.1231	-.0380	.3813	.4634	.3627	.2852	.3359
.020				.4373	.3708	.3844	.4117
.025			.3367				
.040		.0566					
.045			.2719				
.050	-.2055			.2366	.2117	.2093	.2065
.080				.0776			
.085			.1610				
.086		.1845					
.094	-.1259						

ARC11-716 IA14 O1+T12+S12N25 UPPER WING (RB1U48)

ALPHA_(2) = -3.890 BETAO (3) = .050

SECTION (1)UPPER WING DEPENDENT VARIABLE CP

Y/BW	.2990	.3540	.4270	.5340	.6730	.7800	.8870
X/CW							
.150				-.1200	-.1284	-.0682	-.0662
.163		.0000					
.177			-.0153				
.193		.1257					
.229	-.0476						
.250				-.2430	-.2804	-.2594	-.3051
.274			-.1303				
.339		-.1167					
.362	.1061						
.400				-.2699	-.2593		-.4969
.402			-.2656				
497	.0000						
.550				.0026	-.1037		
.565			.0000				
.600							-.2766
.650						-.2416	
.700	.1239				-.1967		
.725				-.0912			
.750						-.1937	-.1287
.760			-.1252				
.775				-.0828	-.1409		
.808			-.0615				
.834	-.0761						
.850				-.0826	-.1138	-.0366	
.857			-.0626				
.865	-.0113						
.900	-.0167			-.0576			.0733
.905			-.0184		.0179		
.950				.0139		.0633	
.953			-.0014				
.965	-.0286						

ALPHAO(2) = -3.890 BETAO (4) = 4.130

SECTION (1)UPPER WING DEPENDENT VARIABLE CP

Y/BW	.2990	.3640	.4270	.5340	.6730	.7800	.8870
X/CW							
.000	-.3150	-.0392	.3044	.3888	.2770	.1947	.2298
.020				.4151	.3582	.3899	.3817
.025			.2906				
.040		.0622					
.045			.2461				
.050	-.1970			.2409	.2332	.2402	.2130

ARC11-716 IA14 01+T12+S12N25 UPPER WING (RB1U48)

ALPHAO(2) = -3.890 BETAO (4) = 4.130

SECTION (1)UPPER WING DEPENDENT VARIABLE CP

Y/BW	.2990	.3640	.4270	.5340	.6730	.7800	.8870
X/CW							
.080				.1076			
.085			.1631				
.086		.1582					
.094	-.1522						
.150				-.0494	-.0319	-.0195	-.0354
.163		.0000					
.177			.0229				
.193		.1337					
.229	-.0168						
.250				-.1536	-.1793	-.1816	-.2522
.274			-.0619				
.339		-.0559					
.362	.1121						
.400				-.1038	-.1552		-.3707
.402			-.0941				
.497	.0000						
.550				-.0456	-.1401		
.565			.0000				
.600							-.3509
.650						-.2728	
.700	.0777				-.2200		
.725				-.1219			
.750						-.2278	-.2197
.760			-.1641				
.775				-.1212	-.1776		
.808			-.1218				
.834	-.1138						
.850				-.1409	-.1688	-.1447	
.857			-.1423				
.865	-.0934						
.900	-.0897			-.1445			-.0218
.905			-.1061		-.1078		
.950				-.0903		-.0234	
.953			-.0878				
.965	-.1112						

DATE 10 JAN 75 TABULATED PRESSURE DATA - IA14A - VOL. 6

ARC11-716 IA14 O1+T12+S12N25 UPPER WING (RB1U48)

ALPHAO(2) = -3.890 BETAO (5) = 8.190

SECTION (1)UPPER WING DEPENDENT VARIABLE CP

Y/BW	.2990	.3640	.4270	.5340	.6730	.7800	.8870
X/CW							
.000	-.4709	-.0617	.1033	.3355	.1727	.0700	.1072
.020				.3752	.3298	.3648	.3585
.025			.1886				
.040		-.0316					
.045			.2058				
.050	-.2253			.2341	.2464	.2523	.2245
.080				.1261			
.085			.1793				
.086		.0929					
.094	-.1316						
.130				-.0076	.0269	.0288	.0067
.163		.0000					
.177			.0545				
.193		.1013					
.229	.0001						
.250				-.0687	-.1118	-.1232	-.1885
.274			-.0263				
.339		-.0480					
.362	.0772						
.400				-.0704	-.1171		-.2870
.402			-.0650				
.497	.0000						
.550				-.0605	-.1372		
.565			.0000				
.600							-.3476
.650						-.2704	
.700	.0443				-.2224		
.725				-.1429			
.750						-.2306	-.2532
.760			-.1793				
.775				-.1479	-.1893		
.808			-.1546				
.834	-.1357						
.850				-.1681	-.1916	-.1858	
.857			-.1885				
.865	-.1364						
.900	-.1456			-.1840			-.0641
.905			-.1529		-.1536		
.950				-.1438		-.0792	
.953			-.1246				
.965	-.1550						

ARC11-716 IA14 O1+T12+S12N25 UPPER WING (RB1U48)

ALPHAO(3) = -.310 BETAO (1) = -8.140

SECTION (1)UPPER WING DEPENDENT VARIABLE CP

Y/BW	.2990	.3640	.4270	.5340	.6730	.7800	.8870
X/CW							
.000	.0110	-.0249	.5399	.7123	.6872	.6639	.6975
.020				.3203	.3184	.3123	.2888
.025			.2801				
.040		.0627					
.045			.1592				
.050	-.1327			.0615	.0559	.0481	-.0018
.080				-.1327			
.085			-.0320				
.086		.1500					
.094	-.1229						
.150				-.3589	-.3579	-.2990	-.2720
.163		.0000					
.177			-.2252				
.193		.0092					
.222	-.0494						
.250				-.4854	-.5165	-.5100	-.4775
.274			-.3612				
.339		-.2914					
.362	.0591						
.400				-.5618	-.6655		-.6749
.402			-.5090				
.497	.0000						
.550				-.2831	-.6877		
.565			.0000				
.600							-.7156
.650						-.6943	
.700	-.0375				-.2169		
.725				-.1536			
.750						-.4180	-.5762
.760			-.1369				
.775				-.0025	-.1945		
.808			.0359				
.834	-.0187						
.850				.0759	-.0576	-.3247	
.857			.0750				
.865	.0682						
.900	.0653			.1574			-.3336
.905			.1557		.0410		
.950				.1584		-.2120	
.955			.1546				
.965	.1368						

ARC11-716 IA14 O1+T12+S12N25 UPPER WING (RB1U48)

ALPHAO(3) = -.330 BETAO (2) = -4.040

SECTION (1)UPPER WING DEPENDENT VARIABLE CP

X/CW \ Y/BW	.2990	.3640	.4270	.5340	.6730	.7800	.8870
.000	-.0626	-.0643	.4818	.6397	.5809	.5431	.6019
.020				.3309	.2964	.3039	.2829
.025			.2739				
.040		.0297					
.045			.1732				
.050	-.1815			.0901	.0558	.0581	.0144
.060				-.0938			
.065			.0056				
.086		.0920					
.094	-.1456						
.150				-.3063	-.3391	-.2815	-.2642
.163		.0000					
.177			-.1670				
.193		.0297					
.229	-.0658						
.250				-.4142	-.4644	-.4675	-.4731
.274			-.2779				
.339		-.2304					
.362	.0569						
.400				-.5090	-.6017		-.6631
.402			-.4343				
.497	.0000						
.530				-.2213	-.6237		
.565			.0000				
.600							-.6969
.650						-.6418	
.700	-.0146				-.2226		
.725				-.1176			
.750						-.2605	-.4486
.760			-.1339				
.775				-.0334	-.1583		
.808			-.0210				
.834	-.0589						
.850				-.0121	-.0209	-.1641	
.857			-.0365				
.855	.0159						
.900	-.0019			.0285			-.3208
.905			.0110		.0821		
.950				.0851		-.0647	
.955			.0612				
.965	.0120						

ARC11-716 IA14 O1+T12+S12N25 UPPER WING (RB1U48)

ALPHAO(3) = -.340 BETAO (3) = .030

SECTION (1)UPPER WING DEPENDENT VARIABLE CP

X/CW \ Y/BW	.2990	.3640	.4270	.5340	.6730	.7800	.8870
.000	-.2055	-.0870	.4118	.5451	.4741	.4221	.5218
.020				.3144	.2617	.2724	.2765
.025			.2464				
.040		.0345					
.045			.1618				
.050	-.2593			.0913	.0501	.0589	.0253
.080				-.0681			
.085			.0201				
.086		.1441					
.094	-.1906						
.150				-.2699	-.2842	-.2479	-.2411
.153		.0000					
.177			-.1326				
.193		.0443					
.229	-.0681						
.250				-.3582	-.4003	-.4208	-.4494
.274			-.2314				
.339		-.2028					
.362	.0654						
.400				-.4635	-.5324		-.6319
.402			-.3935				
.497	.0000						
.550				-.1030	-.2999		
.565			.0000				
.600							-.6483
.650						-.3400	
.700	.0447				-.2054		
.725				-.1084			
.750						-.1501	-.3350
.760			-.1471				
.775				-.0920	-.1187		
.808			-.0771				
.834	-.0280						
.850				-.0970	-.0390	.0339	
.857			-.0948				
.865	-.0359						
.900	-.0467			-.0693			-.0057
.905			-.0647		.0488		
.950				.0213		.0891	
.953			-.0323				
.965	-.0757						

ARC11-716 IA14 O1+T12+S12N25 UPPER WING (RB1U48)

ALPHAO(3) = -.340 BETAO (4) = 4.110

SECTION (1)UPPER WING DEPENDENT VARIABLE CP

Y/BW	.2990	.3640	.4270	.5340	.6730	.7800	.8870
X/CW							
.000	-.3468	-.1096	.3019	.4942	.4049	.3345	.3904
.020				.3160	.2492	.2529	.2471
.025			.1790				
.040		.0349					
.045			.1161				
.050	-.3010			.1211	.0801	.0639	.0264
.080				-.0113			
.085			.0212				
.086		.1003					
.094	-.1912						
.150				-.1875	-.2171	-.2091	-.2083
.163		.0000					
.177			-.0705				
.193		.0465					
.229	-.0201						
.250				-.2747	-.3351	-.3619	-.3967
.274			-.1530				
.339		-.1161					
.362	.0631						
.400				-.3392	-.4296		-.5679
.402			-.2696				
.497	.0000						
.550				-.0869	-.1744		
.565			.0000				
.600							-.5320
.650						-.2547	
.700	.0171				-.2244		
.725				-.13.0			
.750						-.1891	-.0891
.760			-.1949				
.775				-.1337	-.1727		
.808			-.1326				
.834	-.1388						
.850				-.1510	-.1498	-.0322	
.857			-.1603				
.865	-.1111						
.900	-.1150			-.1605			.0723
.905			-.1375		-.0421		
.950				-.1221		.0357	
.953			-.1255				
.955	-.1479						

ARC11-716 IA14 O1+T12+S12N25 UPPER WING (RB1U48)

ALPHAO(3) = -.340 BETAO (5) = 8.180

SECTION (1)UPPER WING DEPENDENT VARIABLE CP

Y/BW	.2990	.3640	.4270	.5340	.6730	.7800	.8870
X/CW							
.000	-.5847	-.0797	.1013	.3127	.3177	.2542	.3394
.020				.2478	.2264	.2596	.2576
.025			.0699				
.040		-.0315					
.045			.0374				
.050	-.3737			.1017	.0926	.0925	.0661
.080				-.0037			
.085			.0307				
.086		-.0375					
.094	-.1960						
.150				-.1382	-.1723	-.1269	-.1501
.163		.0000					
.177			-.0277				
.193		.0761					
.229	.0208						
.250				-.2352	-.2905	-.2814	-.3551
.274			-.1112				
.339		-.1283					
.362	.0535						
.400				-.1540	-.1798		-.4419
.402			-.1565				
.497	.0000						
.550				-.0850	-.1845		
.565			.0000				
.600							-.3689
.650						-.3124	
.700	.0189				-.2404		
.725				-.1830			
.750						-.2595	-.2207
.760			-.1965				
.775				-.1774	-.2200		
.800			-.1657				
.834	-.1559						
.850				-.1963	-.2084	-.1590	
.857			-.2044				
.865	-.1448						
.900	-.1584			-.1998			-.0338
.935			-.1769		-.1419		
.950				-.1705		-.0433	
.953			-.1706				
.965	-.1994						

DATE 10 JAN 75 TABULATED PRESSURE DATA - IA14A - VOL. 6

ARC11-716 IA14 OI+T12+S12N25 UPPER WING (RB1U48)

ALPHAO(4) = 4.170 BETAO (1) = -8.250

SECTION (1)UPPER WING DEPENDENT VARIABLE CP

Y/BW	.2990	.3640	.4270	.5340	.6730	.7800	.8870
X/CW							
.000	.0132	-.0679	.5097	.7355	.7325	.6897	.6693
.020				.1009	.0902	.0111	-.0675
.025			.1164				
.040		-.0168					
.045			-.0283				
.050	-.0974			-.1448	-.1801	-.2177	-.3159
.080				-.3260			
.065			-.2211				
.086		.0432					
.094	-.1369						
.150				-.5666	-.5522	-.5243	-.5181
.163		[illegible]					
.177			-.3850				
.193		-.1135					
.229	-.1142						
.250				-.6560	-.7010	-.6857	-.6562
.274			-.4911				
.339		-.3881					
.362	.0143						
.400				-.7167	-.8261		-.8099
.402			-.6146				
.497	.0000						
.550				-.7299	-.8378		
.565			.0000				
.600							-.7696
.650						-.6717	
.700	-.0044				-.2686		
.725				-.2887			
.750						-.5187	-.5929
.760			-.1615				
.775				-.1976	-.5193		
.808			.0297				
.834	-.0173						
.850				-.0452	-.5061	-.4244	
.857			.0356				
.865	.0335						
.900	.0335			.0384			-.4454
.905			.0609		-.3293		
.950				.0764		-.3831	
.953			.0732				
.965	.0365						

DATE 10 JAN 75 TABULATED PRESSURE DATA - IA14A - VOL. 6

ARC11-716 IA14 D1+T12+S12N25 UPPER WING (RB1U48)

ALPHAO(4) = 4.160 BETAO (2) = -4.050

SECTION (1)UPPER WING DEPENDENT VARIABLE CP

Y/BW	.2990	.3640	.4270	.5340	6730	.7800	.8870
x/CW							
.000	-.0695	-.1514	.4504	.6875	.6658	.6214	.6105
.020				.1199	.1032	.0237	-.0574
.025			.1116				
.040		-.0781					
.045			-.0147				
.050	-.1698			-.1201	-.1578	-.1974	-.3014
.080				-.2935			
.085			-.1776				
.086		.0026					
.094	-.2028						
.150				-.5178	-.5182	-.4945	-.5031
.163		.0000					
.177			-.3132				
.193		-.0783					
.229	-.1372						
.250				-.5697	-.6642	-.6609	-.6492
.274			-.4170				
.339		-.3237					
.362	.0216						
.400				-.6225	-.7706		-.7961
.402			-.5454				
.497	.0000						
.550				-.5849	-.7834		
.565			.0000				
.600							-.7781
.650						-.7689	
.700	-.2938				-.2564		
.725				-.3108			
.750						-.5273	-.6724
.760			-.1896				
.775				-.2137	-.3440		
.800			-.0397				
.834	-.0650						
.850				-.0893	-.2332	-.4885	
.857			-.0682				
.865	-.0324						
.900	-.0395			-.0203			-.4674
.935			-.0605		-.1341		
.950				.0075		-.4525	
.953			-.0504				
.965	-.1109						

ARC11-716 IA14 O1+T12+S12N25 UPPER WING (RB1U48)

ALPHAO(4) = 4.170 BETAO (3) = .030

SECTION (1)UPPER WING DEPENDENT VARIABLE CP

Y/BW	.2990	.3640	.4270	.5340	.6730	.7800	.8870
X/CW							
.000	-.2040	-.2154	.3895	.6069	.5880	.5490	.5525
.020				1228	.0964	.0279	-.0567
.025			.1137				
.040		-.0317					
.045			.0019				
.050	-.2650			-.1065	-.1443	-.1868	-.2855
.080				-.2662			
.085			-.1277				
.086		.0717					
.094	-.2754						
.150				-.4378	-.4880	-.4617	-.4795
.163		.0000					
.177			-.2677				
.193		-.0434					
.229	-.0924						
.250				-.5111	-.6094	-.6275	-.6259
.274			-.3624				
.339		-.2887					
.362	.0402						
.400				-.5732	-.7048		-.7742
.402			-.4975				
.497	.0000						
.550				-.4080	-.6691		
.565			.0000				
.600							-.7522
.650						-.6857	
.700	-.2085				-.2404		
.725				-.2233			
.750						-.5325	-.5888
.760			-.2003				
.775				-.0968	-.3089		
.808			-.0801				
.834	-.1303						
.850				-.0790	-.1606	-.3488	
.857			-.1137				
.865	-.0712						
.900	-.0764			-.0740			-.4035
.905			-.1030		.0022		
.950				-.0440		-.1700	
.953			-.0864				
.965	-.1318						

ARC11-716 IA14 O1+T12+S12N25 UPPER WING (RB1U48)

ALPHAO(4) = 4.170 BETAO (4) = 4.130

SECTION (1)UPPER WING DEPENDENT VARIABLE CP

Y/BW	.2990	.3640	.4270	.5340	.6730	.7800	.8870
X/CW							
.000	-.3913	-.2600	.2316	.5362	.5235	.4884	.5015
.020				.1119	.0808	.0181	-.0551
.025			.0443				
.040		-.0257					
.5			-.0162				
.050	-.3613			-.0902	-.1390	-.1816	-.2732
.080				-.2326			
.085			-.1190				
.086		.0309					
.094	-.2953						
.150				-.3913	-.4504	-.4329	-.4566
.163		.0000					
.177			-.2140				
.193		-.0432					
.229	-.0348						
.250				-.4218	-.5277	-.5903	-.6044
.274			-.2633				
.339		-.2206					
.362	.011[illegible]						
.400				-.4749	-.5979		-.7495
.402			-.3931				
.497	.0000						
.550				-.2025	-.4530		
.565			.0000				
.600							-.7282
.650						-.4807	
.700	-.0561				-.2445		
.725				-.1756			
.750						-.2405	-.4722
.760			-.2335				
.775				-.1519	-.1787		
.808			-.1522				
.834	-.1454						
.850				-.1702	-.1209	-.0792	
.857			-.1881				
.865	-.1396						
.900	-.1454			-.1743			-.2249
.905			-.1842		-.0286		
.950				-.1369		.0174	
.953			-.1772				
.965	-.2008						

ARC11-716 IA14 O1+T12+S12N25 UPPER WING (RB1U48)

ALPHAO(4) = 4.160 BETAO (5) = 8.240

SECTION (1)UPPER WING DEPENDENT VARIABLE CP

X/CW \ Y/BW	.2990	.3640	.4270	.5340	.6730	.7900	.8870
.000	-.7134	-.1293	.0533	.2252	.4313	.4332	.4662
.020				.0064	.0764	.0479	-.0315
.025			-.0003				
.040		-.0514					
.045			-.0242				
.050	-.4877			-.1018	-.1121	-.1385	-.2317
.080				-.1862			
.085			-.0637				
.086		-.0769					
.094	-.3986						
.150				-.2847	-.3649	-.3803	-.4071
.163		.0000					
.177			-.1673				
.193		.0177					
.229	.0502						
.250				-.3699	-.4468	-.4937	-.5561
.274			-.2454				
.339		-.2007					
.362	.0211						
.400				-.2956	-.4539		-.6867
.402			-.32[illegible]				
.497	.0000						
.550				-.1228	-.2214		
.565			.0000				
.600							-.4828
.650						-.3237	
.700	-.0049				-.2524		
.725				-.2084			
.750						-.2301	-.1918
.760			-.2246				
.775				-.1865	-.2184		
.800			-.1804				
.834	-.1662						
.850				-.2069	-.1837	-.0857	
.857			-.2235				
.865	-.1705						
.900	-.1812			-.1970			-.0346
.905			-.1977		-.0806		
.950				-.1637		-.0075	
.953			-.1832				
.965	-.2160						

DATE 10 JAN 75 TABULATED PRESSURE DATA - IA14A - VOL. 6

ARC11-716 IA14 C1+T12+S12N25 UPPER WING (RB1U48)

ALPHAO(5) = 8.130 BETAO (1) = -4.040

SECTION (1)UPPER WING DEPENDENT VARIABLE CP

Y/BW	.2990	.3640	.4270	.5340	.6730	.7600	.8870
X/CW							
.000	-.0645	-.2503	.3800	.6934	.6710	.5738	.5123
.020				-.0793	-.0903	-.2159	-.3422
.025			-.0520				
.040		-.1850					
.045			-.1678				
.050	-.1657			-.2883	-.3438	-.4187	-.5483
.080				-.4484			
.085			-.3210				
.086		-.1211					
.094	-.1949						
.150				-.6651	-.6676	-.6726	-.6959
.163		.0000					
.177			-.4377				
.193		-.1722					
.229	-.1966						
.250				-.7309	-.7946	-.8025	-.7931
.274			-.4900				
.339		-.3712					
.362	-.0009						
.400				-.7206	-.8982		-.8988
.402			-.5921				
.497	.0000						
.550				-.7105	-.8840		
.565			.0000				
.600							-.8279
.650						-.8133	
.700	-.5177				-.2975		
.725				-.3301			
.750						-.6325	-.7604
.760			-.2787				
.775				-.3202	-.6544		
.808			-.1233				
.834	-.0866						
.850				-.2595	-.5794	-.5360	
.857			-.1186				
.865	-.0657						
.900	-.0921			-.1859			-.7492
.905			-.1083		-.3[illegible]		
.950				-.1110		-.5182	
.953			-.1077				
.965	-.1713						

ARC11-716 IA14 O1+T12+S12N25 UPPER WING (RB1U48)

ALPHAO(5) = 8.130 BETAO (2) = .040

SECTION (1)UPPER WING DEPENDENT VARIABLE CP

Y/BW	.2990	.3640	.4270	.5340	.6730	.7800	.8870
X/CW							
.000	-.2145	-.4576	.3218	.6241	.6135	.5277	.4692
.020				-.0370	-.0784	-.2102	-.3466
.025			-.0159				
.040		-.1475					
.045			-.1222				
.050	-.2671			-.2414	-.3252	-.4059	-.5473
.080				-.3990			
.085			-.2721				
.086		-.0138					
.094	-.2694						
.150				-.6061	-.6381	-.6536	-.6885
.163		.0000					
.177			-.3635				
.193		-.1105					
.229	-.1275						
.250				-.6387	-.7604	-.7777	-.7824
.274			-.4469				
.339		-.3432					
.362	.0209						
.400				-.6624	-.8531		-.8878
.402			-.5605				
.497	.0000						
.550				-.6420	-.8468		
.565			.0000				
.600							-.8422
.650						-.7965	
.700	-.4841				-.2748		
.725				-.3328			
.750						-.5914	-.7287
.760			-.2526				
.775				-.2671	-.3703		
.808			-.1207				
.834	-.0806						
.850				-.1824	-.2654	-.5291	
.857			-.1641				
.865	-.0944						
.900	-.1311			-.1263			-.7236
.905			-.1603		-.1624		
.950				-.0718		-.5402	
.953			-.1697				
.965	-.2019						

ARC11-716 IA14 O1+T12+S12N25 UPPER WING (RB1U48)

ALPHAO(5) = 8.120 BETAO (3) = 4.160

SECTION (1)UPPER WING DEPENDENT VARIABLE CP

Y/BW	.2990	.3640	.4270	.5340	.6730	.7600	.8870
X/CW							
.000	-.4199	-.3360	.0758	.4844	.5398	.4805	.4220
.020				-.1165	-.0906	-.2091	-.3477
.025			-.1060				
.040		-.1280					
.045			-.1521				
.050	-.3713			-.2688	-.3249	-.3970	-.5411
.080				-.3994			
.085			-.2270				
.086		-.0646					
.094	-.3467						
.150				-.5428	-.6168	-.6311	-.6737
.163		.0000					
.177			-.2885				
.193		-.1151					
.229	-.0373						
.250				-.3289	-.7266	-.7520	-.7698
.274			-.3490				
.339		-.3030					
.362	-.0329						
.400				-.5728	-.7648		-.8776
.402			-.4550				
.497	.0000						
.550				-.3483	-.7134		
.565			.0000				
.600							-.8442
.650						-.7997	
.700	-.1288				-.2750		
.725				-.2430			
.750						-.6720	-.6472
.760			-.2671				
.775				-.1935	-.3137		
.808			-.2104				
.834	-.1739						
.880				-.1996	-.1670	-.2151	
.857			-.2287				
.865	-.1771						
.900	-.1741			-.1955			-.6118
.905			-.2225		-.0376		
.950				-.1550		-.0749	
.955			-.2160				
.965	-.2339						

ARC11-716 IA14 O1+T12+S12N25 UPPER WING (RB1U48)

ALPHAO(5) = 6.110 BETAO (4) = 8.270

SECTION (1)UPPER WING DEPENDENT VARIABLE CP

Y/BW	.2990	.3640	.4270	.5340	.6730	.7800	.8870
X/CW							
.000	-.7402	-.1592	-.0588	.0280	.4101	.4430	.3957
.020				-.2514	-.1499	-.1990	-.3243
.025			-.0765				
.040		-.1076					
.045			-.1077				
.050	-.6700			-.2884	-.3411	-.3774	-.5191
.080				-.3306			
.085			-.1448				
.086		-.0818					
.094	-.6160						
.150				-.3717	-.5633	-.5969	-.6411
.163		.0000					
.177			-.2308				
.193		-.1370					
.229	.0224						
.250				-.4133	-.6038	-.7051	-.7404
.274			-.3046				
.339		-.2656					
.362	-.0120						
.400				-.2745	-.6204		-.8413
.402			-.3238				
.497	.0000						
.550				-.1910	-.3170		
.565			.0000				
.600							-.7805
.650						-.3609	
.700	-.0472				-.2778		
.725				-.2463			
.750						-.2531	-.5706
.760			-.2742				
.775				-.2311	-.2524		
.808			-.2436				
.834	-.2115						
.850				-.2238	-.1890	-.0958	
.857			-.2483				
.865	-.2199						
.900	-.2222			-.1979			-.2715
.905			-.2179		-.0822		
.950				-.1789		-.0028	
.953			-.1841				
.965	-.2128						

ARC11-716 IA14 O1+T12+S12N25 UPPER WING (RB1U49) (15 FEB 74)

REFERENCE DATA

SREF = 2.4210 SQ.FT. XMRP = 29.5800 INCHES
LREF = 38.7090 INCHES YMRP = .0000 INCHES
BREF = 38.7090 INCHES ZMRP = .0000 INCHES
SCALE = .0300 SCALE

PARAMETRIC DATA

MACH = 1.150 ELEVON = .000
RUDDER = .000 SPOBRK = .000

ALPHAO(1) = -7.860 BETAO (1) = -8.060

SECTION (1)UPPER WING DEPENDENT VARIABLE CP

X/CW \ Y/BW	.2990	.3640	.4270	.5340	.6730	.7800	.8870
.000	-.0716	-.0103	.4079	.5634	.4900	.4150	.4535
.020				.6264	.5875	.6101	.6103
.025			.4970				
.040		.0870					
.045			.4343				
.050	-.0066			.4180	.4143	.4295	.4090
.060				.2472			
.085			.3085				
.086		.2002					
.094	-.0060						
.150				.0076	.0449	.0895	.0897
.163		.0000					
.177			.0855				
.193		.2223					
.229	.0465						
.250				-.1348	-.1494	-.1439	-.1725
.274			-.0475				
.339		-.0387					
.362	.1644						
.400				-.2792	-.3320		-.3994
.402			-.2312				
.497	.0000						
.550				.1036	-.0499		
.565			.0000				
.600							-.4779
.650						-.1161	
.700	.2373				-.1360		
.725				.0390			
.750						.0460	-.1478
.760			-.0011				
.775				.1873	.1136		
.808			.2693				
.834	.1094						
.850				.2815	.2663	.2456	
.857			.2861				
.865	.2770						
.900	.2021			.2978			.2563
.905			.2865		.2722		

ARC11-716 IA14 O1+T12+S12N25 UPPER WING (RB1U49)

ALPHAO(1) = -7.860 BETAO (1) = -8.060

SECTION (1)UPPER WING DEPENDENT VARIABLE CP

Y/BW	.2990	.3640	.4270	.5340	.6730	.7800	.8870
X/CW							
.950				.2672		.2677	
.953			.2546				
.965	.2347						

ALPHAO(1) = -7.860 BETAO (2) = -4.000

SECTION (1)UPPER WING DEPENDENT VARIABLE CP

Y/BW	.2990	.3640	.4270	.5340	.6730	.7800	.8870
X/CW							
.000	-.1558	-.1197	.2867	.4690	.3754	.3012	.3439
.020				.6545	.5518	.5829	.5855
.025			.4179				
.040		.0093					
.045			.3839				
.050	-.0717			.4138	.4126	.4361	.4332
.080				.2652			
.085			.3024				
.086		.1281					
.094	-.0605						
.150				.0549	.0865	.1376	.1373
.163		.0000					
.177			.1186				
.193		.1765					
.229	-.0109						
.250				-.1009	-.1077	-.0781	-.1060
.274			.0007				
.339		-.0257					
.362	.1231						
.400				.1184	.0806		-.1049
.402			-.0756				
.497	.0000						
.550				.1153	-.0040		
.565			.0000				
.600							-.2110
.650						-.1316	
.700	.2459				-.1451		
.725				.0266			
.750						-.0715	-.1182
.760			-.0137				
.775				.0782	.0040		
.800			.1739				
.834	.0619						
.850				.2102	.1543	.1101	

ARC11-716 IA14 O1+T12+S12N25 UPPER WING (RB1U49)

ALPHAO(1) = -7.860 BETAO (2) = -4.000

SECTION (1)UPPER WING DEPENDENT VARIABLE CP

Y/BW	.2990	.3640	.4270	.5340	.6730	.7800	.8870
X/CW							
.857			.2200				
.865	.2117						
.900	.2158			.2468			.1464
.905			.2295		.2428		
.950				.2296		.2258	
.953			.2126				
.965	.1849						

ALPHAO(1) = -7.860 BETAO (3) = .040

SECTION (1)UPPER WING DEPENDENT VARIABLE CP

Y/BW	.2990	.3640	.4270	.5340	.6730	.7800	.8870
X/CW							
.000	-.2294	-.1569	.3205	.4065	.2924	.1869	.2077
.020				.5979	.5457	.5660	.5476
.025			.4523				
.040		.0097					
.045			.4218				
.050	-.1137			.4396	.4426	.4504	.4290
.080				.3181			
.085			.3465				
.086		.1150					
.094	-.1001						
.150				.1490	.1717	.2045	.1787
.163		.0000					
.177			.1865				
.193		.2689					
.229	-.0658						
.250				.0196	.0181	.0268	-.0380
.274			.1187				
.339		.1089					
.362	.1877						
.400				.0841	.0335		-.1597
.402			.0586				
.497	.0000						
.550				.0827	-.0175		
.565			.0000				
.600							-.2202
.650						-.1409	
.700	.2148				-.1557		
.725				-.0021			
.750						-.0930	-.1437
.780			-.0451				

ARC11-716 IA14 O1+T12+S12N25 UPPER WING (RB1U49)

ALPHAO(1) = -7.860 BETAO (3) = .040

SECTION (1)UPPER WING DEPENDENT VARIABLE CP

Y/BW	.2990	.3640	.4270	.5340	.6730	.7800	.8870
X/CW							
.775				.0141	-.0375		
.808			.0403				
.834	.0133						
.850				.0410	-.0108	-.0094	
.857			.0670				
.865	.0845						
.900	.0975			.1301			0720
.905			.1276		.1504		
.950				.1634		.1153	
.953			.1331				
.965	.1018						

ALPHAO(1) = -7.870 BETAO (4) = 4.100

SECTION (1)UPPER WING DEPENDENT VARIABLE CP

Y/BW	.2990	.3640	.4270	.5340	.6730	.7800	.8870
X/CW							
.000	-.2438	-.0826	.2066	.2946	.1741	.0745	.0839
.020				.5293	.5068	.5290	.4976
.025			.3186				
.040		-.0083					
.045			.3041				
.050	-.1378			.4074	.4436	.4450	.4060
.080				.2993			
.085			.2644				
.086		.0974					
.094	-.1081						
.150				.1830	.2129	.2335	.1881
.163		.0000					
.177			.1801				
.193		.1691					
.229	-.0440						
.250				.0836	.0833	.0670	-.0230
.274			.1435				
.339		.1144					
.362	.1140						
.400				.0865	.0314		-.1532
.402			.0822				
.497	.0000						
.550				.0605	-.0287		
.565			.0000				
.600							-.2411
.650						-.1537	

ARC11-716 IA14 O1+T12+S12N25 UPPER WING (RB1U49)

ALPHAO(1) = -7.870 BETAO (4) = 4.100

SECTION (1)UPPER WING DEPENDENT VARIABLE CP

Y/BW	.2990	.3640	.4270	.5340	.6730	.7800	.8870
X/CW							
.700	.1804				-.1692		
.725				-.0316			
.750						-.1217	-.1918
.760			-.0688				
.775				-.0255	-.0755		
.808			-.0259				
.834	-.0120						
.850				-.0304	-.0641	-.0783	
.857			-.0273				
.865	.0002						
.900	.0343			-.0025			-.0131
.905			.0555		-.0002		
.950				.0759		.0169	
.953			.0590				
.965	.0323						

ALPHAO(1) = -7.890 BETAO (5) = 8.200

SECTION (1)UPPER WING DEPENDENT VARIABLE CP

Y/BW	.2990	.3640	.4270	.5340	.6730	.7800	.8870
X/CW							
.000	-.3415	-.1115	.1508	.2354	.0484	-.0613	-.0682
.020				.4912	.4209	.4306	.3951
.025			.3352				
.040		-.0364					
.045			.3166				
.050	-.1834			.3833	.3839	.3844	.3496
.080				.3012			
.085			.2698				
.086		.0691					
.094	-.1435						
.150				.1778	.1974	.2133	.1704
.163		.0009					
.177			.1821				
.193		.2006					
.229	-.0567						
.250				.0808	.0750	.0669	-.0137
.274			.1463				
.339		.0871					
.382	.1637						
.400				.0603	.0151		-.1489
.402			.0550				
.497	.0000						

ARC11-716 IA14 01+T12+S12N25 UPPER WING (RB1U49)

ALPHAO(1) = -7.890 BETAO (5) = 8.200

SECTION (1)UPPER WING DEPENDENT VARIABLE CP

X/CW \ Y/BW	.2990	.3640	.4270	.5340	.6730	.7800	.8870
.550				.0274	-.0452		
.565			.0000				
.600							-.2500
.650						-.1678	
.700	.1173				-.1853		
.725				-.0613			
.750						-.1323	-.2216
.760			-.1008				
.775				-.0654	-.1033		
.808			-.0862				
.834	-.0540						
.850				-.0811	-.1086	-.1104	
.857			-.1249				
.865	-.0676						
.900	-.0930			-.1046			-.0759
.905			-.0864		-.0802		
.950				-.0569		-.0526	
.953			-.0231				
.965	-.0554						

ALPHAO(2) = -3.930 BETAO (1) = -6.100

SECTION (1)UPPER WING DEPENDENT VARIABLE CP

X/CW \ Y/BW	.2990	.3640	.4270	.5340	.6730	.7800	.8870
.000	-.0675	.0186	.5334	.6628	.6040	.5500	.5867
.020				.4974	.4762	.4955	.5048
.025			.4243				
.040		.0649					
.045			.3289				
.050	-.0726			.2570	.2553	.2721	.2535
.080				.0776			
.085			.1522				
.086		.1473					
.094	-.0888						
.150				-.1659	-.1369	-.0849	-.0594
.163		.0000					
.177			-.0554				
.193		.1304					
.229	-.0245						
.250				-.2892	-.3113	-.3015	-.3028
.274			-.1843				
.339		-.1522					

ARC11-716 IA14 O1+T12+S12N25 UPPER WING (RB1U49)

ALPHAO(2) = -3.930 BETAO (1) = -8.100

SECTION (1)UPPER WING DEPENDENT VARIABLE CP

Y/BW	.2990	.3640	.4270	.5340	.6730	.7800	.8870
X/CW							
.362	.1210						
.400				-.4050	-.4716		-.5197
.402			-.3565				
.497	.0000						
.550				-.2693	-.5142		
.565			.0000				
.600							-.5785
.650						-.5927	
.700	.0345				-.1690		
.725				-.0642			
.750						-.2528	-.3396
.760			-.0572				
.775				.0725	-.1132		
.808			.1130				
.834	.0386						
.850				.1508	.0311	-.1615	
.857			.1648				
.865	.1463						
.900	.1638			.2330			-.1701
.905			.2319		.2007		
.950				.2346		-.0458	
.953			.2235				
.965	.1936						

ALPHAO(2) = -3.880 BETAO (2) = -4.120

SECTION (1)UPPER WING DEPENDENT VARIABLE CP

Y/BW	.2990	.3640	.4270	.5340	.6730	.7800	.8870
X/CW							
.000	-.1450	-.0386	.4487	.5847	.5175	.4548	.4917
.020				.4824	.4483	.4697	.4806
.025			.3788				
.040		.0143					
.043			.2966				
.050	-.1527			.2541	.2555	.2658	.2488
.080				.0950			
.085			.1506				
.086		.0988					
.094	-.1285						
.150				-.1315	-.1067	-.0653	-.0482
.163		.0000					
.177			-.0081				
.193		.1137					

ARC11-716 IA14 O1+T12+S12N25 UPPER WING (RB1U49)

ALPHAO(2) = -3.880 BETAO (2) = -4.120

SECTION (1)UPPER WING DEPENDENT VARIABLE CP

Y/BW	.2990	.3640	.4270	.5340	.6730	.7800	.8870
X/CW							
.229	-.0651						
.250				-.2299	-.2517	-.2511	-.2772
.274			-.1183				
.339		-.1160					
.362	.0697						
.400				-.3501	-.4125		-.4821
.402			-.2849				
.497	.0000						
.550				-.0338	-.3970		
.565			.0000				
.600							-.5463
.650						-.3921	
.700	.1303				-.1511		
.725				-.0067			
.750						-.0560	-.1969
.760			-.0471				
.775				.0390	.0173		
.808			.0541				
.834	.0188						
.850				.1261	.1365	.1385	
.857			.0861				
.865	.0905						
.900	.1152			.2216			-.0039
.905			.1992		.2193		
.950				.2204		.2223	
.953			.1963				
.965	.1572						

ALPHAO(2) = -3.890 BETAO (3) = .030

SECTION (1)UPPER WING DEPENDENT VARIABLE CP

Y/BW	.2990	.3640	.4270	.5340	.6730	.7800	.8870
X/CW							
.000	-.2191	-.0713	.4072	.5202	.4201	.3440	.3743
.020				.4816	.4267	.4363	.4291
.025			.3752				
.040		.0143					
.045			.3120				
.050	-.2097			.2871	.2687	.2612	.2318
.080				.1272			
.085			.2059				
.086		.0904					
.094	-.1453						

ARC11-716 IA14 O1+T12+S12N25 UPPER WING (RB1U49)

ALPHAO(2) = -3.890 BETAO (3) = .030

SECTION (1)UPPER WING DEPENDENT VARIABLE CP

X/CW \ Y/BW	.2990	.3640	.4270	.5340	.6730	.7800	.8870
.150				-.0495	-.0627	-.0334	-.0367
.163		.0000					
.177			.0528				
.193		.1468					
.229	-.0964						
.250				-.1738	-.2146	-.2269	-.2596
.274			-.0606				
.339		-.0524					
.362	.0993						
.400				-.2345	-.3294		-.4518
.402			-.1889				
.497	.0000						
.550				.0405	-.0502		
.565			.0000				
.600							-.4001
.650						-.1768	
.700	.1545				-.1533		
.725				-.0382			
.750						-.1224	-.0867
.760			-.0726				
.775				-.0278	-.0715		
.808			-.0104				
.834	-.0276						
.850				-.0327	-.0520	.0112	
.857			-.0188				
.865	.0350						
.900	.0280			-.0199			.1365
.905			.0256		.0597		
.950				.0574		.1213	
.953			.0411				
.965	.0231						

ALPHAO(2) = -3.890 BETAO (4) = 4.040

SECTION (1)UPPER WING DEPENDENT VARIABLE CP

X/CW \ Y/BW	.2990	.3640	.4270	.5340	.6730	.7800	.8870
.000	-.2614	-.0614	.2915	.4032	.3083	.2322	.2939
.020				.4151	.3549	.3793	.4116
.025			.2767				
.040		.0179					
.045			.2257				
.050	-.2053			.2416	.2277	.2341	.2509

ARC11-716 IA14 O1+T12+S12N25 UPPER WING (RB1U49)

ALPHAO(2) = -3.890 BETAO (4) = 4.080

SECTION (1)UPPER WING DEPENDENT VARIABLE CP

X/CW \ Y/BW	.2990	.3640	.4270	.5340	.6730	.7800	.8870
.080				.1081			
.085			.1387				
.086		.0979					
.094	-.1328						
.150				-.0608	-.0548	.0126	.0097
.163		.0000					
.177			.0167				
.193		.1154					
.229	-.0424						
.250				-.1648	-.1988	-.1496	-.2088
.274			-.0687				
.339		-.0615					
.362	.0796						
.400				-.0488	-.0246		-.2642
.402			-.1161				
.497	.0000						
.550				.0818	-.0451		
.565			.0000				
.600							-.2807
.650						-.1945	
.700	.1262				-.1712		
.725				-.0524			
.750						-.1496	-.1923
.760			-.0943				
.775				-.0540	-.1071		
.808			-.0357				
.834	-.0501						
.850				-.0666	-.0988	-.0943	
.857			-.0469				
.865	.0012						
.900	.0024			-.0565			.0160
.905			-.0112		-.0376		
.950				.0052		.0228	
.953			.0015				
.965	-.0209						

ARC11-716 IA14 O1+T12+S12N25 UPPER WING (RB1U49)

ALPHAO(2) = -3.890 BETAO (5) = 8.180

SECTION (1)UPPER WING DEPENDENT VARIABLE CP

Y/BW	.2990	.3640	.4270	.5340	.6730	.7800	.8870
X/CW							
.000	-.4330	-.0860	.1256	.4278	.2167	.1067	.1377
.020				.4349	.3411	.3545	.3425
.025			.1515				
.040		-.0618					
.045			.1730				
.050	-.2552			.2776	.2413	.2416	.2127
.080				.1699			
.085			.1797				
.086		.0469					
.094	-.1784						
.150				.0129	.0036	.0173	-.0009
.163		.0000					
.177			.1182				
.193		.0802					
.229	-.0384						
.250				-.0934	-.1183	-.1235	-.1890
.274			.0153				
.339		.0130					
.362	.0646						
.400				-.0693	-.1185		-.2757
.402			-.0563				
.497	.0000						
.550				-.0266	-.1089		
.565			.0000				
.600							-.3186
.650						-.2242	
.700	.0757				-.2002		
.725				-.0970			
.750						-.1882	-.2494
.760			-.1324				
.775				-.0984	-.1415		
.808			-.1078				
.834	-.0845						
.850				-.1206	-.1482	-.1531	
.857			-.1459				
.865	-.0863						
.900	-.1066			-.1400			-.0605
.905			-.1229		-.1251		
.950				-.1221		-.0769	
.953			-.0982				
.965	-.1301						

ARC11-716 IA14 O1+T12+S12N25 UPPER WING (RB1U49)

ALPHAO(3) = -.310 BETAO (1) = -8.100

SECTION (1)UPPER WING DEPENDENT VARIABLE CP

X/CW \ Y/BW	.2990	.3640	.4270	.5340	.6730	.7800	.8870
.000	.0148	-.0132	.5562	.7306	.7018	.6788	.7146
.020				.3613	.3606	.3586	.3436
.025			.3118				
.040		.0335					
.045			.1952				
.050	-.0902			.1096	.1074	.1021	.0651
.080				-.0804			
.085			.0163				
.086		.0822					
.094	-.0847						
.150				-.2984	-.2945	-.2334	-.2131
.163		.0000					
.177			-.1763				
.193		.0478					
.229	-.0387						
.250				-.4107	-.4465	-.4410	-.4140
.274			-.2940				
.339		-.2247					
.362	.0833						
.400				-.4974	-.5980		-.6091
.402			-.4508				
.497	.0000						
.550				-.5493	-.6354		
.565			.0000				
.600							-.6502
.690						-.6379	
.700	-.2258				-.2062		
.725				-.2198			
.750						-.4426	-.5971
.760			-.0958				
.775				-.1073	-.2556		
.808			.0722				
.834	.0110						
.850				.0261	-.1967	-.3553	
.857			.0590				
.865	.1055						
.900	.0888			.0908			-.3252
.905			.0769		-.1152		
.950				.1310		-.3369	
.953			.0907				
.965	.0563						

ARC11-716 IA14 O1+T12+S12N25 UPPER WING (RB1U49)

ALPHAO(3) = -.330 BETAO (2) = -4.030

SECTION (1)UPPER WING DEPENDENT VARIABLE CP

Y/BW	.2990	.3640	.4270	.5340	.6730	.7800	.8870
X/CW							
.000	-.0996	-.0660	.4907	.6563	.6268	.6013	.6615
.020				.3500	.3450	.3520	.3425
.025			.2887				
.040		.0002					
.045			.1819				
.050	-.1622			.1197	.1082	.1112	.0796
.080				-.0594			
.085			.0191				
.086		.0494					
.094	-.1616						
.150				-.2589	-.2758	-.2107	-.1890
.163		.0000					
.177			-.1367				
.193		.0408					
.229	-.0854						
.250				-.3401	-.3949	-.3910	-.3907
.274			-.2393				
.339		-.1862					
.362	.0533						
.400				-.4227	-.5212		-.5735
.402			-.3552				
.497	.0000						
.550				-.3749	-.5391		
.565			.0000				
.600							-.6103
.650						-.5987	
.700	-.0442				-.1814		
.725				-.1051			
.750						-.3413	-.4886
.760			-.1001				
.775				.0159	-.1421		
.800			.0344				
.834	-.0136						
.850				.0481	-.0100	-.1878	
.857			.0199				
.865	.0609						
.900	.0427			.0789			-.2483
.905			.0435		.1139		
.950				.1212		-.0509	
.953			.0901				
.965	.0541						

ARC11-716 IA14 O1+T12+S12N25 UPPER WING (RB1U49)

ALPHAO(3) = -.340 BETAO (3) = .030

SECTION (1)UPPER WING DEPENDENT VARIABLE CP

Y/BW	.2990	.3640	.4270	.5340	.6730	.7800	.8870
X/CW							
.000	-.1604	-.1008	.4660	.6175	.5511	.4880	.5369
.020				.3609	.3226	.3107	.3184
.025			.2949				
.040		-.0130					
.045			.2047				
.050	-.2470			.1442	.1109	.0920	.0782
.080				-.0245			
.085			.0631				
.086		.0645					
.094	-.1973						
.150				-.2122	-.2263	-.2055	-.1870
.163		.0000					
.177			-.0598				
.193		.0879					
.229	-.1015						
.250				-.2712	-.3500	-.3783	-.3878
.274			-.1540				
.339		-.1191					
.362	.1068						
.400				-.3851	-.4744		-.5675
.402			-.3178				
.497	.0000						
.550				-.1136	-.4886		
.565			.0000				
.600							-.5868
.650						-.5748	
.700	.0226				-.1697		
.725				-.0649			
.750						-.1753	-.3245
.760			-.1074				
.775				-.0429	-.0713		
.808			-.0448				
.834	-.0631						
.850				-.0577	-.0171	.0079	
.857			-.0746				
.865	-.0195						
.900	-.0328			-.0549			-.1738
.905			-.0500		.0687		
.950				-.0121		.1067	
.953			-.0331				
.965	-.0608						

ARC11-716 IA14 O1+T12+S12N25 UPPER WING (RB1U49)

ALPHAO(3) = -.340 BETAO (4) = 4.100

SECTION (1)UPPER WING DEPENDENT VARIABLE CP

Y/BW	.2990	.3640	.4270	.5340	.6730	.7800	.8870
X/CW							
.000	-.2875	-.1347	.3393	.5106	.4281	.3647	.4159
.020				.3117	.2517	.2428	.2489
.025			.2066				
.040		.0349					
.045			.1366				
.050	-.2718			.1179	.0687	.0569	.0338
.080				-.0222			
.085			.0375				
.086		.0700					
.094	-.1795						
.150				-.1975	-.2292	-.2196	-.2044
.163		.0000					
.177			-.0727				
.193		.0707					
.229	-.0607						
.250				-.2821	-.3376	-.3683	-.4003
.274			-.1663				
.339		-.1317					
.362	.0804						
.400				-.3766	-.4589		-.5408
.402			-.3104				
.497	.0000						
.550				-.0795	-.2268		
.565			.0000				
.600							-.5699
.650						-.2426	
.700	.0185				-.1881		
.725				-.0884			
.750						-.0679	-.2119
.760			-.1429				
.775				-.0811	-.1016		
.808			-.0791				
.834	-.0922						
.850				-.0963	-.0538	.0465	
.857			-.1104				
.865	-.0595						
.900	-.0694			-.1028			.1426
.905			-.0957		.0360		
.950				-.0540		.1002	
.953			-.0715				
.965	-.1003						

ARC11-716 IA14 O1+T12+S12N25 UPPER WING (R81U49)

ALPHAO(3) = -.340 BETAO (5) = 8.170

SECTION (1)UPPER WING DEPENDENT VARIABLE CP

Y/BW	.2990	.3640	.4270	.5340	.6730	.7800	.8870
X/CW							
.000	-.5387	-.1388	.1009	.4000	.3533	.2707	.3056
.020				.2852	.2523	.2447	.2269
.025			.0619				
.040		-.0722					
.045			.0394				
.050	-.3547			.1334	.1027	.0800	.0442
.070				.0204			
.085			.0468				
.086		-.0632					
.094	-.2284						
.150				-.1104	-.1634	-.1593	-.1761
.163		.0000					
.177			-.0097				
.193		.0850					
.229	-.0314						
.250				-.1987	-.2827	-.3224	-.3647
.274			-.0716				
.339		-.0649					
.362	.0551						
.400				-.2125	-.3553		-.5261
.402			-.1795				
.497	.0000						
.550				-.1133	-.2039		
.565			.0000				
.600							-.4329
.650						-.2791	
.700	-.0106				-.2191		
.725				-.1425			
.750						-.2148	-.1474
.760			-.1568				
.775				-.1330	-.1599		
.808			-.1302				
.834	-.1232						
.850				-.1517	-.1656	-.1279	
.857			-.1758				
.865	-.1135						
.900	-.1340			-.1731			.0182
.905			-.1548		-.1338		
.950				-.1686		-.0125	
.953			-.1552				
.965	-.1049						

ARC11-716 IA14 O1+T12+S12N25 UPPER WING (RB1U49)

ALPHAO(4) = 4.130 BETAO (1) = -8.080

SECTION (1)UPPER WING DEPENDENT VARIABLE CP

Y/BW	.2990	.3640	.4270	.5340	.6730	.7800	.8870
x/CW							
.000	.0698	-.0676	.5228	.7625	.7785	.7338	.7118
.020				.1560	.1592	.0882	.0174
.025			.1549				
.040		-.0111					
.045			.0235				
.050	-.0544			-.0838	-.1059	-.1376	-.2290
.080				-.2526			
.085			-.1535				
.086		.0384					
.094	-.0848						
.150				-.4801	-.4677	-.4368	-.4323
.163		.0000					
.177			-.3253				
.193		-.0713					
.229	-.0891						
.250				-.5690	-.6103	-.5976	-.5708
.274			-.4114				
.339		-.3114					
.362	.0495						
.400				-.6266	-.7330		-.7199
.402			-.5269				
.497	.0000						
.550				-.6401	-.7688		
.565			.0000				
.600							-.7065
.650						-.7416	
.700	-.4284				-.2535		
.725				-.2859			
.750						-.5528	-.6863
.760			-.2066				
.775				-.2488	-.4675		
.800			-.0431				
.834	-.0068						
.850				-.1602	-.4319	-.4548	
.857			-.0050				
.865	.0480						
.900	.0382			-.0867			-.4601
.905			.0202		-.3787		
.950				-.0290		-.3788	
.953			.0194				
.965	-.0904						

ARC11-716 IA14 O1+T12+S12N25 UPPER WING (RB1U49)

ALPHAO(4) = 4.010 BETAO (2) = -4.010

SECTION (1)UPPER WING DEPENDENT VARIABLE CP

X/CW \ Y/BW	.2990	.3640	.4270	.5340	.6730	.7800	.8670
.000	-.0335	-.1728	.4589	.7179	.7076	.6718	.6584
.020				.1559	.1576	.0860	.0053
.025			.1268				
.040		-.0750					
.045			.0061				
.050	-.1550			-.0588	-.0918	-.1310	-.2275
.080				-.2242			
.085			-.1501				
.086		-.0204					
.094	-.1646						
.130				-.4336	-.4395	-.4142	-.4214
.163		.0000					
.177			-.2211				
.193		-.0685					
.229	-.1250						
.250				-.4706	-.5764	-.5739	-.5606
.274			-.2957				
.339		-.2090					
.362	.0236						
.400				-.5344	-.6807		-.7036
.402			-.4537				
.497	.0000						
.550				-.5490	-.6775		
.565			.0000				
.600							-.6854
.650						-.7114	
.700	-.3427				-.2183		
.725				-.2349			
.750						-.5119	-.6558
.760			-.1388				
.775				-.1759	-.3128		
.808			-.0078				
.834	-.0127						
.850				-.0879	-.1668	-.4341	
.837			-.0214				
.865	.0279						
.900	.0173			-.0236			-.4233
.905			-.0093		-.0980		
.950				.0253		-.3937	
.953			-.0153				
.965	-.0572						

ARC11-716 IA14 OL+T12+S12N25 UPPER WING (RB1U49)

ALPHAO(4) = 4.000 BETAO (3) = .040

SECTION (1)UPPER WING DEPENDENT VARIABLE CP

Y/BW	.2990	.3640	.4270	.5340	.6730	.7800	.8870
X/CW							
.000	-.1716	-.2278	.4216	.6594	.6410	.5962	.5962
.020				.1720	.1587	.0864	.0051
.025			.1449				
.040		-.0909					
.045			.0506				
.050	-.2376			-.0996	-.0824	-.1258	-.2177
.080				-.1943			
.085			-.0835				
.086		-.0257					
.094	-.2484						
.150				-.3497	-.4146	-.3954	-.4163
.163		.0000					
.177			-.1682				
.193		.0034					
.229	-.1349						
.250				-.4231	-.5259	-.555[illegible]	-.5578
.274			-.2674				
.339		-.1969					
.362	.0907						
.400				-.4866	-.6246		-.6987
.402			-.4103				
.497	.0000						
.550				-.4697	-.6199		
.565			.0000				
.600							-.6805
.650						-.6806	
.700	-.1961				-.2046		
.725				-.2002			
.750						-.4942	-.6122
.760			-.1684				
.775				-.0924	-.2745		
.808			-.0551				
.834	-.0597						
.850				-.0727	-.1693	-.4046	
.857			-.0896				
.865	-.0502						
.900	-.0638			-.0711			-.3925
.905			-.0937		.0202		
.950				-.0509		-.2153	
.953			-.1005				
.965	-.1280						

ARC11-716 IA14 O1+T12+S12N25 UPPER WING (RB1U49)

ALPHAO(4) = 4.030 BETAO (4) = 4.110

SECTION (1)UPPER WING DEPENDENT VARIABLE CP

X/CW \ Y/BW	.2990	.3640	.4270	.5340	.6730	.7800	.8870
.000	-.3251	-.3070	.2573	.5572	.5272	.4963	.5344
.020				.1468	.1119	.0567	-.0083
.025			.0924				
.040		-.0521					
.045			.0270				
.050	-.2987			-.0516	-.1049	-.1426	-.2179
.080				-.1892			
.085			-.0825				
.086		.0352					
.094	-.2706						
.150				-.3447	-.4098	-.3903	-.4049
.163		.0000					
.177			-.1785				
.193		.0027					
.229	-.0822						
.250				-.4063	-.4976	-.5409	-.5446
.274			-.2666				
.339		-.2109					
.362	.0522						
.400				-.4772	-.5833		-.6879
.402			-.3943				
.497	.0000						
.550				-.2854	-.5752		
.565			.0000				
.600							-.6769
.650						-.6347	
.700	-.1136				-.2178		
.725				-.1365			
.750						-.3003	-.5000
.760			-.1894				
.775				-.0863	-.1638		
.808			-.1054				
.834	-.1032						
.850				-.1010	-.0743	-.1695	
.857			-.1346				
.865	-.0952						
.900	-.1014			-.1158			-.2999
.905			-.1312		.0036		
.950				-.0965		-.0407	
.953			-.1255				
.965	-.1506						

ARC11-716 IA14 O1+T12+S12N25 UPPER WING (RB1U49)

ALPHAO(4) = 4.030 BETAO (5) = 8.210

SECTION (1)UPPER WING DEPENDENT VARIABLE CP

Y/BW	.2990	.3640	.4270	.5340	.6730	.7800	.8870
X/CW							
.000	-.6253	-.1692	.0780	.2830	.4406	.4149	.4422
.020				.0539	.1191	.0677	.0057
.025			.0269				
.040		-.0573					
.045			.0047				
.050	-.4556			-.0537	-.0727	-.1188	-.1971
.080				-.1444			
.085			-.0328				
.086		-.1036					
.094	-.3704						
.150				-.2483	-.3329	-.3640	-.3758
.163		.0000					
.177			-.1338				
.193		.0557					
.229	.0173						
.250				-.3209	-.4209	-.4895	-.5284
.274			-.2055				
.339		-.1621					
.362	.0472						
.400				-.3783	-.5238		-.6519
.402			-.3182				
.497	.0000						
.550				-.1804	-.3945		
.565			.0000				
.600							-.6436
.650						-.4283	
.700	-.0610				-.2345		
.725				-.1920			
.750						-.2650	-.3696
.760			-.2071				
.775				-.1631	-.1865		
.800			-.1733				
.834	-.1447						
.850				-.1867	-.1658	-.0935	
.857			-.2092				
.865	-.1522						
.900	-.1805			-.1942			-.2051
.905			-.1927		-.0954		
.950				-.1799		.0097	
.955			-.1999				
.965	-.2320						

ARC11-716 IA14 O1+T12+S12N25 UPPER WING (RB1U49)

ALPHAO(5) = 8.040 BETAO (1) = -8.090

SECTION (1)UPPER WING DEPENDENT VARIABLE CP

Y/BW	.2990	.3640	.4270	.5340	.6730	.7800	.8870
X/CW							
.000	.0763	-.0492	.5094	.8076	.7579	.6707	.6202
.020				-.0062	-.0177	-.1383	-.2319
.025			.0213				
.040		-.0198					
.045			-.1217				
.050	-.0439			-.2348	-.2795	-.3403	-.4514
.080				-.3992			
.085			-.2864				
.086		.0094					
.094	-.0837						
.150				-.6335	-.6060	-.5999	-.6062
.163		.0000					
.177			-.4657				
.193		-.1555					
.229	-.3857						
.250				-.7298	-.7317	-.7289	-.7057
.274			-.5276				
.339		-.3999					
.362	.0290						
.400				-.7862	-.8341		-.8118
.402			-.6144				
.497	.0000						
.550				-.8057	-.8075		
.565			.0000				
.600							-.7905
.650						-.7817	
.700	-.5287				-.2878		
.725				-.4668			
.750						-.6350	-.6937
.760			-.3259				
.775				-.4130	-.6466		
.808			-.2123				
.834	-.0510						
.850				-.2728	-.6005	-.5789	
.857			-.1621				
.865	-.0121						
.900	.0186			-.2029			-.6562
.905			-.0841		-.5147		
.950				-.1414		-.5115	
.953			-.0287				
.965	-.1047						

ARC11-716 IA14 O1+T12+S12N25 UPPER WING (RB11:49)

ALPHAO(5) = 7.970 BETAO (2) = -4.030

SECTION (1)UPPER WING DEPENDENT VARIABLE CP

Y/BW	.2990	.3640	.4270	.5340	.6730	.7800	.8870
X/CW							
.000	-.0399	-.2006	.3776	.7337	.7166	.6279	.5715
.020				-.0391	-.0217	-.1396	-.2609
.025			-.0553				
.040		-.1639					
.045			-.1710				
.050	.1362			-.2386	-.2689	-.3390	-.4630
.080				-.3918			
.085			-.3277				
.086		-.1094					
.094	-.1710						
.150				-.5885	-.5834	-.5871	-.6075
.163		.0000					
.177			-.4322				
.193		-.1775					
.229	-.1731						
.250				-.6412	-.7047	-.7114	-.7008
.274			-.3687				
.339		-.2630					
.362	-.0296						
.400				-.5827	-.6054		-.6037
.402			-.4971				
.497	.0000						
.550				-.6272	-.7061		
.565			.0000				
.600							-.7852
.650						-.7798	
.700	-.4422				-.2654		
.725				-.2661			
.750						-.6230	-.6739
.760			-.2365				
.775				-.2616	-.6160		
.808			-.0994				
.834	-.0018						
.850				-.2060	-.4857	-.5278	
.857			-.0905				
.865	-.0046						
.900	-.0338			-.1515			-.6302
.905			-.0733		-.2705		
.950				-.0920		-.4744	
.955			-.0759				
.965	-.1187						

DATE 13 JAN 75 TABULATED PRESSURE DATA - IA14A - VOL. 6

ARC11-716 IA14 O1+T12+S12N25 UPPER WING (RB1U49)

ALPHAO(5) = 8.060 BETAO (3) = .040

SECTION (1)UPPER WING DEPENDENT VARIABLE CP

Y/BW	.2990	.3640	.4270	.5340	.6730	.7800	.8870
X/CW							
.000	-.1938	-.4403	.3487	.6594	.6542	.5718	.5143
.020				.0066	-.0203	-.1454	-.2736
.025			.0198				
.040		-.2664					
.045			-.0804				
.050	-.2431			-.1954	-.2657	-.3427	-.4754
.060				-.3476			
.065			-.2256				
.086		-.1180					
.094	-.2523						
.150				-.5509	-.5770	-.5873	-.6179
.163		.0000					
.177			-.3127				
.193		-.0467					
.229	-.1890						
.250				-.5781	-.6956	-.7106	-.7140
.274			-.3947				
.339		-.2646					
.362	.0864						
.400				-.6080	-.7903		-.8163
.402			-.5049				
.497	.0000						
.550				-.5969	-.7891		
.565			.0000				
.600							-.7937
.650						-.7909	
.700	-.4375				-.2564		
.725				-.2913			
.750						-.6180	-.6638
.760			-.2222				
.775				-.2408	-.3762		
.808			-.0961				
.834	-.0370						
.850				-.1777	-.2623	-.5358	
.857			-.1307				
.865	-.0467						
.900	-.0954			-.1429			-.6504
.905			-.1335		-.1588		
.950				-.0955		-.5106	
.953			-.1525				
.985	-.1684						

ARC11-716 IA14 O1+T12+S12N25 UPPER WING (RB1U49)

ALPHAO(5) = 8.060 BETAO (4) = 4.140

SECTION (1)UPPER WING DEPENDENT VARIABLE CP

X/CW \ Y/BW	.2990	.3640	.4270	.5340	.6730	.7800	.8870
.000	-.3635	-.4412	.0984	.5296	.3603	.5092	.4677
.020				-.0629	-.0479	-.1509	-.2734
.025			-.0750				
.040		-.1705					
.045			-.1145				
.050	-.3174			-.2291	-.2717	-.3383	-.4673
.080				-.3569			
.085			-.1924				
.086		-.0444					
.094	-.3052						
.150				-.5217	-.5591	-.5702	-.6031
.163		.0000					
.177			-.2842				
.193		-.0746					
.229	-.0804						
.250				-.5281	-.6695	-.6868	-.6980
.274			-.3532				
.339		-.2809					
.362	.0053						
.400				-.5623	-.7399		-.8018
.402			-.4598				
.497	.0000						
.550				-.4401	-.6992		
.565			.0000				
.600							-.7758
.650						-.7750	
.700	-.2112				-.2402		
.725				-.2237			
.750						-.6275	-.8281
.760			-.2229				
.775				-.1371	-.3980		
.808			-.1523				
.834	-.1382						
.850				-.1320	-.2337	-.5439	
.857			-.1779				
.865	-.1301						
.900	-.1388			-.1515			-.5442
.905			-.1797		-.0584		
.950				-.1399		-.3490	
.953			-.1841				
.965	-.1971						

DATE 15 JAN 75 TABULATED PRESSURE DATA - IA14A - VOL. 6

ARC11-716 IA14 O1+T12+S12N25 UPPER WING (RB1U49)

ALPHAO(5) = 8.050 BETAO (5) = 8.270

SECTION (1)UPPER WING DEPENDENT VARIABLE CP

Y/BW	.2990	.3640	.4270	.5340	.6730	.7800	.8870
X/CW							
.000	-.6835	-.2121	-.0290	.1108	.4393	.4376	.4118
.020				-.1834	-.0934	-.1530	-.2688
.025			-.0534				
.040		-.1058					
.045			-.0799				
.050	-.3456			-.2411	-.2894	-.3335	-.4566
.080				-.2930			
.085			-.1170				
.086		-.1064					
.094	-.5085						
.150				-.3474	-.5356	-.5557	-.5899
.163		.0000					
.177			-.1983				
.193		-.0850					
.229	.0357						
.250				-.4022	-.5831	-.6657	-.6891
.274			-.2710				
.339		-.2243					
.362	.0121						
.400				-.4367	-.6308		-.7884
.402			-.3701				
.497	.0000						
.550				-.2430	-.4747		
.565			.0000				
.600							-.7520
.650						-.6206	
.700	-.0511				-.2673		
.725				-.2426			
.750						-.3493	-.6141
.760			-.2576				
.775				-.2256	-.2570		
.808			-.2305				
.834	-.1881						
.850				-.2370	-.1961	-.1956	
.857			-.2537				
.865	-.1996						
.900	-.2176			-.2323			-.4839
.905			-.2378		-.1038		
.950				-.2072		-.0711	
.955			-.2277				
.965	-.2659						

ARC11-716 IA14 O1+T12+S12N25 UPPER WING (RB1U50) (15 FEB 74)

REFERENCE DATA

SREF = 2.4210 SQ.FT. XMRP = 29.5800 INCHES
LREF = 38.7090 INCHES YMRP = .0000 INCHES
BREF = 38.7090 INCHES ZMRP = .0000 INCHES
SCALE = .0300 SCALE

PARAMETRIC DATA

MACH = 1.250 ELEVON = .000
RUDDER = .000 SPOBRK = .000

ALPHAO(1) = -8.010 BETAO (1) = -8.020

SECTION (1)UPPER WING DEPENDENT VARIABLE CP

X/CW \ Y/SW	.2990	.3640	.4270	.5340	.6730	.7800	.8870
.000	.0043	-.0692	.3372	.5694	.4962	.4324	.4655
.020				.6292	.5945	.6130	.6245
.025			.4384				
.040		.0676					
.045			.3838				
.050	-.0136			.4208	.4307	.4400	.4383
.080				.2531			
.085			.2573				
.086		.1829					
.094	.0061						
.150				.0231	.0580	.1102	.1386
.163		.0000					
.177			.0859				
.193		.1870					
.229	.0358						
.250				-.1244	-.1153	-.0967	-.1045
.274			-.0435				
.339		-.0227					
.362	.1555						
.400				-.2589	-.2919		-.3203
.402			-.2217				
.497	.0000						
.550				-.2916	-.3447		
.565			.0000				
.600							-.3957
.650						-.4070	
.700	-.0087				-.1417		
.725				.0122			
.750						-.3275	-.3776
.760			.0172				
.775				.1441	.0093		
.808			.1795				
.834	.0985						
.850				.1596	.0865	-.0994	
.857			.1626				
.865	.2012						
.900	.1926			.1699			-.1970
.905			.1921		.1666		

ARC11-716 IA14 O1+T12+S12N25 UPPER WING (RB1U50)

ALPHAO(1) = -8.010 BETAO (1) = -8.020

SECTION (1)UPPER WING DEPENDENT VARIABLE CP

Y/BW	.2990	.3640	.4270	.5340	.6730	.7800	.8870
X/CW							
.950				.2091		-.0398	
.953			.2496				
.965	.2196						

ALPHAO(1) = -8.010 BETAO (2) = -4.000

SECTION (1)UPPER WING DEPENDENT VARIABLE CP

Y/BW	.2990	.3640	.4270	.5340	.6730	.7800	.8870
X/CW							
.000	-.0793	-.1598	.2072	.4554	.3745	.3133	.3694
.020				.5849	.5337	.5630	.5767
.025			.3660				
.040		-.0271					
.045			.3289				
.050	-.0833			.4022	.4059	.4153	.4154
.080				.2505			
.085			.2169				
.086		.1104					
.094	-.0404						
.150				.0327	.0651	.1234	.1403
.163		.0000					
.177			.0818				
.193		.1503					
.229	-.0065						
.250				-.1057	-.1010	-.0813	-.0998
.274			-.0342				
.339		-.0276					
.362	.1096						
.400				-.2427	-.2605		-.3079
.402			-.2057				
.497	.0000						
.550				-.2356	-.3105		
.565			.0000				
.600							-.3875
.650						-.3739	
.700	.0781				-.1235		
.725				.0541			
.750						-.1931	-.3682
.760			.0227				
.775				.1253	.0797		
.808			.1194				
.834	.0662						
.850				.1103	.1024	.0164	

ARC11-716 IA14 O1+T12+S12N25 UPPER WING (RB1U50)

ALPHAO(1) = -8.010 BETAO (2) = -4.000

SECTION (1)UPPER WING DEPENDENT VARIABLE CP

Y/BW	.2990	.3640	.4270	.5340	.6730	.7800	.8870
X/CW							
.897			.1095				
.855	.1573						
.900	.1381			.1137			-.0350
.905			.1299		.1374		
.950				.1422		.1856	
.953			.1587				
.965	.1425						

ALPHAO(1) = -8.000 BETAO (3) = .030

SECTION (1)UPPER WING DEPENDENT VARIABLE CP

Y/BW	.2990	.3640	.4270	.5340	.6730	.7800	.8870
X/CW							
.000	-.1542	-.2005	.1172	.3422	.2552	.2135	.2552
.020				.5304	.4702	.5102	.5057
.025			.3008				
.040		-.0623					
.045			.2718				
.050	-.1203			.3775	.3805	.3882	.3728
.080				.2429			
.085			.1946				
.086		.0546					
.094	-.0665						
.150				.0513	.0858	.1221	.1226
.163		.0000					
.177			.0953				
.193		.1240					
.229	-.0401						
.250				-.0852	-.0833	-.0744	-.1019
.274			-.0069				
.339		-.0214					
.362	.0858						
.400				-.2107	-.2310		-.2943
.402			-.1721				
.497	.0000						
.550				.0598	-.2003		
.565			.0000				
.600							-.3747
.650						-.0921	
.700	.1310				-.1214		
.725				.0603			
.750						.0317	-.1042
.760			.0104				

ARC11-716 IA14 O1+T12+S12N25 UPPER WING (RB1U50)

ALPHAO(1) = -8.000 BETAO (3) = .030

SECTION (1)UPPER WING DEPENDENT VARIABLE CP

Y/BW	.2990	.3640	.4270	.5340	.6730	.7800	.8870
X/CW							
.775				.0830	.0567		
.808			.0763				
.834	.0518						
.850				.0624	.0541	.0731	
.857			.0584				
.865	.1101						
.900	.0999			.0532			.1371
.905			.0895		.0818		
.950				.0928		.1408	
.953			.1129				
.965	.0936						

ALPHAO(1) = -8.010 BETAO (4) = 4.100

SECTION (1)UPPER WING DEPENDENT VARIABLE CP

Y/BW	.2990	.3640	.4270	.5340	.6730	.7800	.8870
X/CW							
.000	-.2274	-.1456	.1286	.2632	.1767	.1088	.1398
.020				.4705	.4079	.4333	.4603
.025			.2526				
.040		-.0758					
.045			.2307				
.050	-.1478			.3447	.3431	.3353	.3612
.080				.2315			
.085			.1676				
.086		.0344					
.094	-.0951						
.150				.0698	.0816	.1009	.1315
.163		.0000					
.177			.0977				
.193		.1162					
.229	-.0587						
.250				-.0705	-.0845	-.0840	-.0879
.274			-.0036				
.339		-.0217					
.362	.0900						
.400				-.1803	-.2108		-.2587
.402			-.1562				
.497	.0000						
.550				.1045	.0871		
.565			.0000				
.400							-.0809
.690						.0000	

ARC11-716 IA14 O1+T12+S12N25 UPPER WING (RB1U50)

ALPHAO(1) = -8.010 BETAO (4) = 4.100

SECTION (1)UPPER WING DEPENDENT VARIABLE CP

Y/BW	.2990	.3640	.4270	.5340	.6730	.7800	.8870
X/CW							
.700	.1397				-.1362		
.725				.0590			
.750						.0204	-.0423
.760			-.0058				
.775				.0749	.0470		
.808			.0518				
.834	.0331						
.850				.0461	.0371	.0402	
.857			.0247				
.865	.0617						
.900	.0619			.0281			.0743
.905			.1081		.0516		
.950				.0686		.0917	
.953			.1252				
.965	.1037						

ALPHAO(1) = -8.030 BETAO (5) = 8.160

SECTION (1)UPPER WING DEPENDENT VARIABLE CP

Y/BW	.2990	.3640	.4270	.5340	.6730	.7800	.8870
X/CW							
.000	-.2940	-.1184	.1142	.2351	.0960	.0037	.0239
.020				.4367	.3486	.3735	.3625
.025			.2525				
.040		-.0175					
.045			.2356				
.050	-.1809			.3199	.3100	.3096	.2873
.080				.2146			
.085			.1926				
.086		.0773					
.094	-.1326						
.150				.0681	.0868	.1041	.1196
.163		.0000					
.177			.1102				
.193		.1232					
.229	-.0255						
.250				-.0517	-.0590	-.0517	-.0222
.274			.0157				
.339		-.0114					
.362	.1089						
.400				-.0806	.0451		-.0551
.402			-.1198				
.497	.0000						

ARC11-716 IA14 O1+T12+S12N25 UPPER WING (RB1U50)

ALPHAO(1) = -8.030 BETAO (5) = 8.160

SECTION (1)UPPER WING DEPENDENT VARIABLE CP

Y/BW	.2990	.3640	.4270	.5340	.6730	.7800	.8870
X/CW							
.550				.0910	.0482		
.565			.0000				
.600							-.1566
.650						-.0700	
.700	.1247				-.1573		
.725				.0289			
.750						-.0354	-.1355
.760			-.0210				
.775				.0220	-.0069		
.808			-.0029				
.834	.0146						
.850				-.0010	-.0236	-.027[illegible]	
.857			-.0418				
.865	.0252						
.900	-.0042			-.0273			-.0157
.905			-.0260		-.0113		
.950				-.0148		.0072	
.953			.0077				
.965	-.0045						

ALPHAO(2) = -3.930 BETAO (1) = -8.050

SECTION (1)UPPER WING DEPENDENT VARIABLE CP

Y/BW	.2990	.3640	.4270	.5340	.6730	.7800	.8870
X/CW							
.000	.0060	-.0577	.3761	.6490	.6157	.5641	.5963
.020				.5256	.5166	.5179	.5350
.025			.3541				
.040		.0620					
.045			.2756				
.050	-.0271			.2951	.3072	.3063	.2975
.080				.1170			
.085			.1454				
.086		.1044					
.094	-.0602						
.150				-.1041	-.0847	-.0352	.0055
.163		.0000					
.177			-.0384				
.193		.0848					
.229	-.0187						
.250				-.2494	-.2544	-.2347	-.2224
.274			-.1675				
.339		-.1311					

DATE 10 JAN 75 TABULATED PRESSURE DATA - IA14A - VOL. 6

ARC11-716 IA14 O1+112+S12N25 UPPER WING (RB1U50)

ALPHAO(2) = -3.930 BETAO (1) = -8.050

SECTION (1)UPPER WING DEPENDENT VARIABLE CP

Y/BW	.2990	.3640	.4270	.5340	.6730	.7800	.8870
X/CW							
.362	.0798						
.400				-.3577	-.4102		-.4274
.402			-.3276				
.497	.0000						
.550				-.4109	-.4554		
.565			.0000				
.600							-.4457
.650						-.4895	
.700	-.2350				-.1812		
.725				-.1161			
.750						-.4929	-.4870
.760			-.0376				
.775				-.0145	-.2679		
.808			.1174				
.834	.0491						
.850				.0604	-.1754	-.2630	
.857			.1128				
.865	.1532						
.900	.1402			.0858			-.3497
.905			.1152		-.0116		
.950				.1071		-.1657	
.953			.1091				
.965	.0888						

ALPHAO(2) = -3.930 BETAO (2) = -4.020

SECTION (1)UPPER WING DEPENDENT VARIABLE CP

Y/BW	.2990	.3640	.4270	.5340	.6730	.7800	.8870
X/CW							
.000	-.0804	-.1219	.3027	.5550	.5250	.4659	.5014
.020				.4934	.4756	.4773	.4902
.025			.3101				
.040		-.0065					
.045			.2398				
.050	-.1028			.2763	.2895	.2671	.2746
.060				.1130			
.065			.1258				
.086		.0605					
.094	-.1227						
.150				-.1036	-.0778	-.0351	-.0020
.163		.0000					
.177			-.0342				
.193		.0663					

DATE 10 JAN 75 TABULATED PRESSURE DATA - IA14A - VOL. 6

ARC11-716 IA14 O1+T12+S12NES UPPER WING (RB1U50)

ALPHAO(2) = -3.930 BETAO (2) = -4.020

SECTION (1)UPPER WING DEPENDENT VARIABLE CP

Y/BW	.2930	.3640	.4270	.5340	.6730	.7800	.8870
x/CW							
.229	-.0541						
.250				-.2267	-.2384	-.2271	-.2238
.274			-.1518				
.339		-.1265					
.362	.0340						
.400				-.3397	-.3883		-.4213
.432			-.3092				
.497	.0000						
.550				-.3578	-.4202		
.565			.0000				
.600							-.4519
.650						-.4873	
.700	-.1227				-.1512		
.725				-.0695			
.750						-.4107	-.4611
.760			-.0494				
.775				.0537	-.1190		
.808			.0904				
.834	.0279						
.850				.0715	-.0387	-.1991	
.857			.0660				
.865	.1038						
.900	.0876			.0632			-.2369
.905			.0697		.0652		
.950				.0712		-.1684	
.953			.0625				
.955	.0538						

ALPHAO(2) = -3.940 BETAO (3) = .050

SECTION (1)UPPER WING DEPENDENT VARIABLE CP

Y/BW	.2990	.3640	.4270	.5340	.6730	.7800	.8870
x/CW							
.000	-.1595	-.1137	.2822	.4843	.4252	.3623	.3984
.020				.4602	.4252	.4315	.4362
.025			.2886				
.040		-.0584					
.045			.2278				
.050	-.1702			.2704	.2694	.2569	.2454
.080				.1262			
.085			.1264				
.086		.0099					
.094	-.1475						

ALPHAO(2) = -3.940 BETAO (3) = .050

SECTION (1)UPPER WING DEPENDENT VARIABLE CP

X/CW \ Y/BW	.2990	.3640	.4270	.5340	.6730	.7800	.8870
.130				-.0619	-.0628	-.0253	-.0041
.163		.0000					
.177			-.0008				
.193		.0744					
.229	-.0821						
.259				-.1843	-.1969	-.1989	-.2141
.274			-.1014				
.339		-.0906					
.362	.0276						
.400				-.3028	-.3429		-.4015
.402			-.2632				
.497	.0000						
.550				-.2956	-.3841		
.565			.0000				
.600							-.4334
.650						-.4447	
.700	-.0085				-.1361		
.725				-.0015			
.750						-.2636	-.4271
.760			-.0332				
.775				.0531	-.0015		
.808			.0390				
.834	.0003						
.850				.0399	.0302	-.1033	
.857			.0109				
.865	.0603						
.900	.0405			.0192			-.1458
.905			.0192		.0554		
.950				.0232		.1021	
.953			.0205				
.965	.0085						

ALPHAO(2) = -3.940 BETAO (4) = 4.090

SECTION (1)UPPER WING DEPENDENT VARIABLE CP

X/CW \ Y/BW	.2990	.3640	.4270	.5340	.6730	.7800	.8870
.000	-.2347	-.1072	.2444	.4163	.3828	.2560	.3425
.020				.4060	.3569	.3651	.4169
.025			.2441				
.040		-.0453					
.045			.2024				
.090	-.2401			.2440	.2296	.2184	.2431

ARC11-716 IA14 O1+T12+S12N25 UPPER WING (RB1U50)

ALPHAO(2) = -3.740 BETAO (4) = 4.090

SECTION (1)UPPER WING DEPENDENT VARIABLE CP

Y/BW	.2990	.3640	.4270	.5340	.6730	.7800	.8670
X/CW							
.080				.1225			
.085			.1055				
.086		.0316					
.094	-.1591						
.150				-.0526	-.0565	-.0339	.0072
.163		.0000					
.177			.0162				
.193		.0826					
.229	-.0968						
.250				-.1625	-.1869	-.1734	-.1949
.274			-.0796				
.339		-.0750					
.362	.0559						
.400				-.2807	-.3168		-.3787
.402			-.2315				
.497	.0000						
.550				-.1337	-.3181		
.565			.0000				
.600							-.4227
.650						-.3038	
.700	.0076				-.1331		
.725				.0261			
.750						-.0310	-.2290
.760			-.0480				
.775				.0422	.0333		
.808			.0268				
.834	-.0171						
.850				.0226	.0213	.0419	
.857			-.0266				
.865	.0155						
.900	.0038			-.0092			.0249
.905			-.0084		.0344		
.950				.0046		.1083	
.953			.0105				
.965	-.0304						

ARC11-71F IA14 O1+T12+S12N2S UPPER WING (RB1U50)

ALPHAO(2) = -3.950 BETAO (5) = 8.110

SECTION (1)UPPER WING DEPENDENT VARIABLE CP

Y/BW	.2990	.3640	.4270	.5340	.6730	.7800	.8870
X/CW							
.000	-.3574	-.0497	.1014	.3620	.2434	.1677	.1932
.020				.3747	.3209	.3309	.3237
.025			.1859				
.040		-.0188					
.045			.1854				
.050	-.2851			.2331	.2156	.2062	.1878
.080				.1265			
.085			.1364				
.086		.0920					
.094	-.1932						
.150				-.0352	-.0382	-.0102	-.0157
.163		.0000					
.177			.0189				
.193		.1097					
.229	-.0480						
.250				-.1508	-.1654	-.1744	-.2078
.274			-.0688				
.339		-.0768					
.362	.0928						
.400				-.2425	-.2735		-.3718
.402			-.2177				
.497	.0000						
.550				-.0448	-.0976		
.565			.0000				
.600							-.3686
.650						-.1048	
.700	.0119				-.1662		
.725				-.0038			
.750						-.0554	-.1032
.760			-.0590				
.775				.0010	-.0091		
.808			-.0150				
.834	-.0146						
.850				-.0220	-.0295	-.0288	
.857			-.0491				
.865	.0035						
.900	-.0201			-.0475			.0538
.905			-.0424		-.0343		
.950				-.0443		.0232	
.953			-.0297				
.965	-.0498						

ARC11-716 IA14 01+T12+S12N25 UPPER WING (RB1U50)

ALPHAO(3) = -.340 BETAO (1) = -8.060

SECTION (1)UPPER WING DEPENDENT VARIABLE CP

Y/BW	.2390	.3640	.4270	.5340	.6730	.7800	.8870
X/CW							
.000	.0066	.0259	.4732	.7401	.7012	.6414	.6778
.020				.4177	.4151	.3988	.4142
.025			.2861				
.040		.0261					
.045			.1720				
.050	-.0334			.1728	.1716	.1630	.1560
.080				-.0147			
.085			.0238				
.086		.0676					
.094	-.0799						
.150				-.2370	-.2250	-.1569	-.1200
.163		.0000					
.177			-.1523				
.193		.0158					
.229	-.0589						
.250				-.3585	-.3828	-.3546	-.3261
.274			-.2615				
.339		-.1999					
.362	.0330						
.400				-.4577	-.5200		-.5110
.402			-.3983				
.497	.0000						
.550				-.4909	-.5572		
.565			.0000				
.600							-.5196
.650						-.5455	
.700	-.3229				-.2132		
.725				-.1873			
.750						-.5655	-.4972
.760			-.1230				
.775				-.1389	-.4079		
.808			.0018				
.834	-.0022						
.850				-.0894	-.2941	-.3572	
.857			.0447				
.865	.1101						
.900	.1027			-.0500			-.4157
.905			.0656		-.2621		
.950				-.0080		-.2673	
.953			.0621				
.965	.0345						

ARC11-716 IA14 O1+T12+B12N25 UPPER WING (RB1U50)

ALPHAO(3) = -.350 BETAO (2) = -4.020

SECTION (1)UPPER WING DEPENDENT VARIABLE CP

Y/BW	.2990	.3640	.4270	.5340	.6730	.7800	.8870
X/CW							
.000	-.0681	-.0512	.3992	.6397	.6139	.5619	.5897
.020				.3952	.3889	.3689	.3713
.025			.2588				
.040		-.0096					
.045			.1530				
.050	-.1027			.1644	.1634	.1461	.1357
.080				-.0106			
.085			.0318				
.086		.0388					
.094	-.1385						
.150				-.2247	-.2192	-.1681	-.1277
.163		.0003					
.177			-.1488				
.193		.0063					
.229	-.0867						
.250				-.3361	-.3642	-.3559	-.3327
.274			-.2476				
.339		-.2048					
.362	.0140						
.400				-.4291	-.4969		-.5119
.402			-.3760				
.497	.0000						
.550				-.4666	-.5280		
.565			.0000				
.600							-.5118
.650						-.5477	
.700	-.2855				-.1891		
.725				-.1748			
.750						-.5394	-.5037
.760			-.0917				
.775				-.1049	-.2772		
.808			.0403				
.834	-.0041						
.850				-.0226	-.2258	-.3051	
.857			.0344				
.865	.0784						
.900	.0615			.0112			-.3243
.905			.0333		-.1288		
.930				.0273		-.2317	
.953			.0172				
.965	-.0051						

ARC11-716 IA14 O1+T12+S12N25 UPPER WING (RB1USO)

ALPHAO(3) = -.360 BETAO (3) = .040

SECTION (1)UPPER WING DEPENDENT VARIABLE CP

X/CW \ Y/BW	.2990	.3640	.4270	.5340	.6730	.7800	.8870
.000	-.1309	-.1163	.3394	.5710	.5271	.4692	.5003
.020				.3607	.3390	.3183	.3265
.025			.2227				
.040		-.0561					
.045			.1361				
.050	-.1902			.1529	.1329	.1165	.1108
.080				-.0119			
.085			.0345				
.086		.0116					
.094	-.1903						
.150				-.1936	-.2124	-.1688	-.1381
.163		.0000					
.177			-.1103				
.193		.0137					
.229	-.0979						
.250				-.2911	-.3331	-.3310	-.3314
.274			-.1935				
.339		-.1594					
.362	.0015						
.400				-.3812	-.4525		-.5025
.402			-.3427				
.497	.0000						
.550				-.4012	-.4688		
.565			.0000				
.600							-.5025
.650						-.5390	
.700	-.1558				-.1685		
.725				-.1192			
.750						-.4319	-.4720
.760			-.0971				
.775				-.0044	-.1861		
.808			.0091				
.834	-.0341						
.850				.0113	-.1081	-.2588	
.857			-.0185				
.865	.0185						
.900	.0026			-.0100			-.2646
.905			-.0185		.0067		
.950				-.0150		-.1991	
.953			-.0241				
.965	-.0479						

ARC11-716 IA14 O1+T12+S12N25 UPPER WING (RB1U50)

ALPHAO(3) = -.360 BETAO (4) = 4.080

SECTION (1)UPPER WING DEPENDENT VARIABLE CP

Y/BW	.2990	.3640	.4270	.4340	.6730	.7800	.8870
X/CW							
.000	-.2492	-.1315	.2742	.4974	.4289	.4122	.4462
.020				.3130	.2873	.2988	.2982
.025			.1807				
.040		-.0394					
.045			.1204				
.050	-.2711			.1221	.1027	.1141	.1019
.080				-.0121			
.085			.0248				
.086		.0106					
.094	-.2190						
.150				-.1682	-.1844	-.1472	-.1323
.163		.0000					
.177			-.0758				
.193		.0431					
.225	-.0940						
.250				-.2653	-.2949	-.3034	-.3197
.274			-.1611				
.339		-.1340					
.362	.0317						
.400				-.3514	-.3965		-.4854
.402			-.3064				
.497	.0000						
.550				-.3137	-.4260		
.565			.0000				
.600							-.4844
.650						-.4903	
.700	-.0929				-.1655		
.725				-.0355			
.750						-.2866	-.3338
.760			-.0920				
.775				.0118	-.0472		
.808			.0031				
.834	-.0469						
.850				-.0020	-.0076	-.1384	
.857			-.0262				
.865	.0127						
.900	-.0088			-.0302			-.1720
.905			-.0235		.0290		
.950				-.0259		.0887	
.953			-.0227				
.965	-.0434						

ARC11-716 IA14 O1+T12+S12N25 UPPER WING (RB1U50)

ALPHAO(3) = -.360 BETAO (9) = 8.120

SECTION (1)UPPER WING DEPENDENT VARIABLE CP

Y/BW	.2990	.3640	.4270	.5340	.6730	.7800	.8870
X/CW							
.000	-.4797	-.1061	.1127	.3853	.3461	.2835	.3143
.020				.2596	.2624	.2351	.2284
.025			.0910				
.040		-.0794					
.045			.0725				
.050	-.3607			.1026	.0979	.0827	.0577
.080				-.0152			
.085			.0312				
.086		-.0379					
.094	-.2436						
.150				-.1417	-.1649	-.1529	-.1456
.163		.0000					
.177			-.0503				
.193		.0606					
.229	.0050						
.250				-.2359	-.2711	-.2943	-.3219
.274			-.1405				
.339		-.1420					
.362	.0549						
.400				-.3204	-.3813		-.4703
.402			-.2765				
.497	.0000						
.550				-.1591	-.3709		
.565			.0000				
.600							-.4682
.650						-.4219	
.700	-.0605				-.1936		
.725				-.0744			
.750						-.1801	-.3084
.760			-.1067				
.775				-.0343	-.0531		
.808			-.0466				
.834	-.0626						
.850				-.0561	-.0521	-.0515	
.857			-.0791				
.865	-.0304						
.900	-.0578			-.0771			-.0952
.905			-.0807		-.0392		
.950				-.0792		.0515	
.953			-.0852				
.965	-.1150						

ARC11-716 IA14 O1+T12+S12N25 UPPER WING (RB1U50)

ALPHAO(4) = 4.010 BETAO (1) = -8.080

SECTION (1)UPPER WING DEPENDENT VARIABLE CP

Y/BW	.2990	.3640	.4270	.5340	.6730	.7800	.8870
X/CW							
.000	.1402	-.0069	.4823	.7983	.7804	.7589	.7649
.020				.2261	.2724	.2176	.1707
.025			.1631				
.040		-.0174					
.045			.0469				
.050	-.0157			-.0141	.0033	-.0071	-.0730
.080				-.1868			
.085			-.1219				
.086		.0243					
.094	-.0235						
.150				-.4046	-.3617	-.3148	-.2964
.163		.0000					
.177			-.2641				
.193		-.0855					
.229	-.0650						
.250				-.4917	-.5043	-.4763	-.4448
.274			-.3704				
.339		-.2910					
.362	-.0121						
.400				-.5633	-.6223		-.5909
.402			-.4743				
.497	.0000						
.550				-.5721	-.6589		
.565			.0000				
.600							-.5882
.650						-.6106	
.700	-.3950				-.2387		
.725				-.3619			
.750						-.5577	-.5890
.760			-.1992				
.775				-.2332	-.5133		
.808			-.1472				
.834	-.0520						
.850				-.1604	-.4526	-.4744	
.857			-.0897				
.865	.0604						
.900	.0634			-.0867			-.5197
.905			-.0209		-.3996		
.950				-.0413		-.3819	
.953			.0246				
.965	-.0099						

ARC11-716 IA14 O1+T12+S12N25 UPPER WING (RB1U50)

ALPMAO(4) = 4.010 BETAO (2) = -4.030

SECTION (1)UPPER WING DEPENDENT VARIABLE CP

Y/BW	.2990	.3640	.4270	.5340	.6730	.7800	.8670
X/CW							
.000	.0055	-.1096	.4110	.7010	.6918	.6577	.6899
.020				.2152	.2289	.1773	.1380
.025			.1345				
.040		-.0894					
.045			.0193				
.050	-.1050			-.0097	-.0200	-.0371	-.0955
.080				-.1739			
.085			-.1244				
.086		-.0272					
.094	-.1098						
.150				-.3829	-.3620	-.3242	-.3113
.163		.0000					
.177			-.2560				
.193		-.0912					
.229	-.1207						
.250				-.4755	-.5016	-.4788	-.4582
.274			-.3706				
.339		-.2916					
.362	-.0391						
.400				-.5492	-.6112		-.5952
.402			-.4772				
.497	.0000						
.550				-.5641	-.6390		
.565			.0000				
.600							-.5962
.650						-.6289	
.700	-.3751				-.2188		
.725				-.2386			
.750						-.5312	-.5962
.760			-.1861				
.775				-.1720	-.4616		
.808			-.3851				
.834	-.0205						
.850				-.1460	-.4224	-.4378	
.857			-.0347				
.865	.0444						
.900	.0338			-.1264			-.4765
.905			-.0087		-.2966		
.950				-.0967		-.3692	
.953			-.0158				
.965	-.0492						

ARC11-716 IA14 O1+T12+S12N25 UPPER WING (RB1U50)

ALPHAO(4) = 4.050 BETAO (3) = .040

SECTION (1)UPPER WING DEPENDENT VARIABLE CP

Y/BW	.2990	.3640	.4270	.5340	.6730	.7800	.8870
X/CW							
.000	-.1341	-.2154	.3471	.6404	.6089	.5667	.6135
.020				.1592	.1915	.1367	.1133
.025			.1005				
.040		-.1116					
.045			-.0047				
.050	-.1840			-.0450	-.0450	-.0672	-.1046
.080				-.1903			
.085			-.1345				
.086		-.0516					
.094	-.1867						
.150				-.3794	-.3713	-.3335	-.3147
.163		.0000					
.177			-.2388				
.193		-.0824					
.229	-.1276						
.250				-.4516	-.4969	-.4845	-.4611
.274			-.3158				
.339		-.2467					
.362	-.0415						
.400				-.4792	-.5890		-.5939
.402			-.4151				
.497	.0000						
.550				-.4925	-.5954		
.565			.0000				
.600							-.5869
.650						-.6111	
.700	-.3321				-.2064		
.725				-.1986			
.750						-.5497	-.5890
.760			-.1432				
.775				-.1654	-.3049		
.808			-.0501				
.834	-.0258						
.850				-.1171	-.2250	-.4182	
.857			-.0530				
.865	-.0001						
.900	-.0182			-.0823			-.4334
.905			-.0533		-.1634		
.950				-.0546		-.3639	
.953			-.0647				
.965	-.0905						

ARC11-716 IA14 01+T12+S12N25 UPPER WING (RB1U50)

ALPHAO(4) = 4.050 BETAO (4) = 4.090

SECTION (1)UPPER WING DEPENDENT VARIABLE CP

Y/BW	.2990	.3640	.4270	.5340	.6730	.7800	.8870
X/CW							
.000	-.3048	-.2922	.1989	.5439	.5165	.5309	.5640
.020				.1198	.1421	.1207	.0788
.025			.0228				
.040		-.1107					
.045			.0453				
.050	-.2650			-.0466	-.0743	-.0703	-.1142
.080				-.1771			
.085			-.1232				
.086		-.0564					
.094	-.2626						
.150				-.3254	-.3576	-.3161	-.3137
.163		.0000					
.177			-.1982				
.193		-.0485					
.229	-.1131						
.250				-.3788	-.4445	-.4569	-.4519
.274			-.2580				
.339		-.2069					
.362	-.0096						
.400				-.4394	-.5176		-.5848
.402			-.3812				
.497	.0000						
.550				-.4328	-.5150		
.565			.0000				
.600							-.5675
.650						-.5731	
.700	-.2903				-.1974		
.725				-.1709			
.750						-.5102	-.5382
.760			-.1272				
.775				-.0797	-.2185		
.800			-.0437				
.834	-.0551						
.850				-.0480	-.1735	-.2732	
.857			-.0646				
.865	-.0421						
.900	-.0402			-.0571			-.3678
.905			-.0699		-.0382		
.950				-.0560		-.2071	
.955			-.0731				
.965	-.0881						

ARC11-716 IA14 O1+T12+S12N25 UPPER WING (RB1U5D)

ALPHAO(4) = 4.080 BETAO (5) = 8.170

SECTION (1)UPPER WING DEPENDENT VARIABLE CP

Y/BW	.2990	.3640	.4270	.5340	.6730	.7800	.8870
X/CW							
.000	-.5345	-.1833	.0435	.3008	.4456	.4130	.4343
.020				.0551	.1419	.0858	.0393
.025			.0104				
.040		-.1178					
.045			-.0192				
.050	-.4298			-.0634	-.0573	-.0904	-.1553
.080				-.1622			
.085			.0516				
.086		-.1468					
.094	-.3233						
.150				-.2602	-.3275	-.3235	-.3201
.163		.0000					
.177			-.1467				
.193		.0310					
.229	-.0139						
.250				-.3255	-.4093	-.4539	-.4602
.274			-.2133				
.339		-.1833					
.362	.0378						
.400				-.3869	-.4941		-.5851
.402			-.3344				
.497	.0000						
.550				-.3045	-.4837		
.565			.0000				
.600							-.5645
.650						-.5659	
.700	-.1892				-.2199		
.725				-.1509			
.750						-.3651	-.4348
.760			-.1568				
.775				-.0988	-.1753		
.808			-.0937				
.834	-.0746						
.850				-.1071	-.1129	-.2208	
.857			-.1263				
.865	-.0767						
.900	-.1057			-.1262			-.2589
.905			-.1260		-.0546		
.950				-.1291		-.0507	
.953			-.1338				
.965	-.1578						

ARC11-716 IA14 O1+T12+S12N25 UPPER WING (RB1U50)

ALPHAO(5) = 0.080 BETAO (1) = -0.030

SECTION (1)UPPER WING DEPENDENT VARIABLE CP

Y/BW	.2990	.3640	.4270	.5340	.6730	.7800	.8870
X/CW							
.000	.1263	-.0231	.5389	.8327	.7960	.7248	.6868
.020				.0892	.1132	.0012	-.0821
.025			.0827				
.040		-.0140					
.045			-.0585				
.050	-.0128			-.1361	-.1573	-.2073	-.3020
.080				-.3021			
.085			-.2443				
.086		-.0034					
.094	-.0303						
.150				-.5186	-.4842	-.4685	-.4677
.163		.0000					
.177			-.4069				
.193		-.1562					
.229	-.0644						
.250				-.6188	-.6095	-.5967	-.5697
.274			-.4726				
.339		-.3532					
.362	-.0090						
.400				-.6821	-.6781		-.6617
.402			-.5440				
.497	.0000						
.550				-.6866	-.6600		
.565			.0000				
.600							-.6486
.650						-.6466	
.700	-.4557				-.2656		
.725				-.5521			
.750						-.5314	-.5835
.760			-.2413				
.775				-.5263	-.5563		
.808			-.2110				
.834	-.1438						
.850				-.4282	-.5390	-.5114	
.857			-.1957				
.865	-.0029						
.900	.0689			-.3638			-.5260
.905			-.1615		-.4901		
.950				-.2854		-.4669	
.953			-.1284				
.965	-.0223						

ARC11-716 IA14 OI+T12+S12N25 UPPER WING (RB1U50)

ALPHAO(5) = 8.000 BETAO (2) = -3.980

SECTION (1)UPPER WING DEPENDENT VARIABLE CF

Y/SW	.2990	.3640	.4270	.5340	.6730	.7800	.8870
X/CW							
.000	.0158	-.1503	.4042	.7468	.7289	.6604	.6215
.020				.0378	.0842	-.0290	-.1235
.025			.0065				
.040		-.1240					
.045			-.1201				
.050	-.1353			-.1663	-.1752	-.2254	-.3280
.080				-.3187			
.085			-.2778				
.086		-.0327					
.094	-.1125						
.150				-.5227	-.4894	-.4770	-.4827
.163		.0000					
.177			-.3831				
.193		-.1990					
.229	-.1295						
.250				-.6135	-.6104	-.5987	-.5833
.274			-.4562				
.339		-.3481					
.362	-.0846						
.400				-.6590	-.7042		-.6803
.402			-.5259				
.497	.0000						
.550				-.6763	-.6774		
.565			.0000				
.600							-.6570
.650						-.6859	
.700	-.4370				-.2469		
.725				-.3608			
.750						-.5718	-.5948
.760			-.2714				
.775				-.2809	-.5875		
.800			-.2049				
.834	-.0518						
.850				-.2304	-.5508	-.5308	
.857			-.1473				
.865	.0089						
.900	.0054			-.1995			-.5021
.905			-.0803		-.4774		
.950				-.1631		-.4636	
.953			-.0443				
.965	-.0648						

ARC11-716 IA14 OI+T12+S12N25 UPPER WING (RB1U50)

ALPHAO(5) = 7.910 BETAO (3) = .040

SECTION (1)UPPER WING DEPENDENT VARIABLE CP

Y/BW	.2990	.3640	.4270	.5340	.6730	.7900	.8870
X/CW							
.000	-.1507	-.3115	.2708	.6296	.6379	.5840	.5591
.020				-.0180	.0382	-.0558	-.1450
.025			-.0517				
.040		-.2276					
.045			-.1605				
.050	-.1961			-.1971	-.2057	-.2494	-.3409
.080				-.3321			
.085			-.2731				
.086		-.1502					
.094	-.1963						
.150				-.5165	-.4984	-.4852	-.4902
.163		.0000					
.177			-.3736				
.193		-.1707					
.229	-.1037						
.250				-.5814	-.6096	-.6026	-.5884
.274			-.4226				
.339		-.3083					
.362	-.0767						
.400				-.6037	-.6942		-.6867
.402			-.4588				
.497	.0000						
.550				-.5433	-.6766		
.565			.0000				
.600							-.6585
.650						-.6769	
.700	-.3997				-.2288		
.725				-.2419			
.750						-.6104	-.6185
.760			-.2342				
.775				-.1998	-.5585		
.808			-.1393				
.834	-.0351						
.850				-.2017	-.5154	-.5391	
.857			-.1096				
.865	-.0157						
.900	-.0404			-.1839			-.4983
.905			-.0837		-.3611		
.950				-.1541		-.4718	
.953			-.0875				
.965	-.1222						

ARC11-716 IA14 O1+T12+S12N25 UPPER WING (RB1USD)

ALPHAO(5) = 8.000 BETAO (4) = 4.130

SECTION (1)UPPER WING DEPENDENT VARIABLE CP

Y/BW	.2990	.3640	.4270	.5340	.6730	.7800	.8870
X/CW							
.000	-.3425	-.4931	.0391	.5091	573	.5410	.5200
.020				-.1039	.0053	-.0672	-.1515
.025			-.1569				
.040		-.2502					
.045			-.2115				
.050	-.2890			-.2381	-.2128	-.2497	-.3409
.080				-.3438			
.085			-.2663				
.086		-.1545					
.094	-.2057						
.150				-.4769	-.4720	-.4724	-.4820
.163		.0000					
.177			-.2783				
.193		-.1231					
.229	-.1643						
.250				-.4976	-.5753	-.5838	-.5801
.274			-.3241				
.339		-.2605					
.362	-.3381						
.400				-.4990	-.6556		-.6798
.402			-.4303				
.497	.0000						
.550				-.5038	-.6460		
.565			.0000				
.600							-.6524
.650						-.6597	
.700	-.3716				-.2314		
.725				-.2558			
.750						-.6227	-.6237
.760			-.1780				
.775				-.1917	-.2800		
.808			-.0896				
.834	-.0938						
.850				-.1202	-.2088	-.5348	
.857			-.1025				
.865	-.0938						
.900	-.0700			-.0987			-.4940
.905			-.1098		-.1818		
.950				-.0909		-.4855	
.953			-.1260				
.965	-.1342						

ARC11-716 IA14 O1+T12+S12N25 UPPER WING (RB1U50)

ALPHAO(5) = 7.980 BETAO (5) = 8.220

SECTION (1)UPPER WING DEPENDENT VARIABLE CP

Y/BW	.2990	.3640	.4270	.5340	.6730	.7800	.8870
X/CW							
.000	-.5456	-.2256	-.0614	.1779	.4730	.4454	.4475
.020				-.1665	-.0110	-.0870	-.1584
.025			-.0790				
.040		-.1835					
.045			-.1005				
.050	-.4667			-.2409	-.2233	-.2565	-.3346
.060				-.3047			
.085			-.136				
.086		-.1476					
.094	-.4303						
.150				-.3698	-.4751	-.4726	-.4769
.163		.0000					
.177			-.2131				
.193		-.1364					
.229	-.0717						
.250				-.3945	-.5576	-.5810	-.5784
.274			-.2745				
.339		-.2330					
.362	.0044						
.400				-.4352	-.5815		-.6774
.402			-.3706				
.497	.0000						
.550				-.3424	-.5661		
.565			.0000				
.600							-.6424
.650						-.6498	
.700	-.2892				-.2471		
.725				-.2055			
.750						-.6362	-.5568
.760			-.2184				
.775				-.1604	-.2803		
.808			-.1689				
.834	-.1281						
.850				-.1585	-.1994	-.2567	
.857			-.1910				
.865	-.1289						
.900	-.1526			-.1689			-.4451
.905			-.1768		-.0916		
.950				-.1673		-.1669	
.953			-.1843				
.965	-.2058						

ARC11-716 IA14 O1+T12+S12N25 UPPER WING (RB1U51) (15 FEB 74)

REFERENCE DATA

SREF = 2.4210 SQ.FT. XMRP = 29.5000 INCHES
LREF = 38.7090 INCHES YMRP = .0000 INCHES
BREF = 38.7090 INCHES ZMRP = .0000 INCHES
SCALE = .0300 SCALE

ALPHAO(1) = -7.890 BETAO (1) = -8.050

PARAMETRIC DATA

MACH = 1.400 ELEVON = .000
RUDDER = .000 SPOBRK = .000

SECTION (1)UPPER WING DEPENDENT VARIABLE CP

Y/BW	.2990	.3640	.4270	.5340	.6730	.7800	.8870
X/CW							
.000	.1141	.0109	.3997	.6268	.5701	.5083	.5435
.020				.6502	.6254	.6483	.6621
.025			.4422				
.040		.1057					
.045			.3793				
.050	.0481			.4416	.4636	.4785	.4805
.080				.2798			
.085			.2660				
.086		.1842					
.094	.0566						
.150				.0576	.1080	.1676	.2053
.163		.0000					
.177			.1104				
.193		.1964					
.229	.0751						
.250				-.0758	-.0521	-.0324	-.0219
.274			-.0158				
.339		-.0007					
.362	.1395						
.400				-.1920	-.2212		-.2242
.402			-.1672				
.497	.0000						
.550				-.2523	-.2673		
.565			.0000				
.600							-.3093
.650						-.3195	
.700	-.1240				-.1201		
.725				-.0226			
.750						-.2938	-.2953
.760			[illegible]				
.775				.1122	-.1807		
.808			.2010				
.834	.1908						
.850				.1613	-.0777	-.2123	
.857			.1939				
.865	.2243						
.900	.2124			.1725			-.2099
.905			.1952		.0122		

ARC11-716 IA14 OI+T12+S12N25 UPPER WING (RB1U51)

ALPHAO(1) = -7.890 BETAO (1) = -8.050

SECTION (1)UPPER WING DEPENDENT VARIABLE CP

Y/BW	.2990	.3640	.4270	.5340	.6730	.7800	.8870
x/CW							
.950				.1806		-.0571	
.953			.1782				
.965	.1547						

ALPHAO(1) = -7.880 BETAO (2) = -4.010

SECTION (1)UPPER WING DEPENDENT VARIABLE CP

Y/BW	.2990	.3640	.4270	.5340	.6730	.7800	.8870
x/CW							
.000	.0337	-.0511	.2367	.5180	.4479	.3834	.4155
.020				.5902	.5569	.5842	.5881
.027			.3559				
.040		.0378					
.045			.3113				
.050	-.0221			.4038	.4268	.4381	.4504
.080				.2663			
.085			.2364				
.086		.1218					
.094	.0073						
.150				.0570	.1034	.1521	.1845
.163		.0000					
.177			.0964				
.193		.1601					
.229	.0378						
.250				-.0714	-.0531	-.0319	-.0300
.274			-.0165				
.339		-.0162					
.362	.1189						
.400				-.1855	-.2101		-.2236
.402			-.1726				
.497	.0000						
.550				-.2301	-.2571		
.565			.0000				
.600							-.3136
.650						-.3024	
.700	-.1072				-.1139		
.725				.0071			
.750						-.2777	-.3002
.760			.0426				
.775				.1374	-.0968		
.808			.1680				
.834	.1202						
.850				.1674	.0151	-.1143	

ARC11-716 IA14 O1+T12+S12N25 UPPER WING (RB1U51)

ALPHAO(1) = -7.880 BETAO (2) = -4.010

SECTION (1)UPPER WING DEPENDENT VARIABLE CP

Y/BW	.2990	.3640	.4270	.5340	.6730	.7800	.8870
X/CW							
.857			.1432				
.865	.1773						
.900	.1584			.1546			-.2095
.905			.1411		.1599		
.950				.1468		-.0377	
.953			.1294				
.965	.1066						

ALPHAO(1) = -7.870 BETAO (3) = .020

SECTION (1)UPPER WING DEPENDENT VARIABLE CP

Y/BW	.2990	.3640	.4270	.5340	.6730	.7800	.8870
X/CW							
.000	-.0805	-.1153	.1611	.3772	.3084	.2503	.2843
.020				.5206	.4696	.5015	.5057
.025			.2920				
.040		-.0158					
.045			.2597				
.050	-.0760			.3678	.3798	.3837	.3823
.080				.2455			
.085			.1959				
.086		.0802					
.094	-.0405						
.150				.0615	.0916	.1421	.1732
.163		.0000					
.177			.0906				
.195		.1367					
.229	.0088						
.250				-.0585	-.0474	-.0283	-.0289
.274			-.0049				
.339		-.0239					
.362	.0916						
.400				-.1719			-.2124
.402			-.1592				
.497	.0000						
.550				-.2041	-.2358		
.565			.0000				
.600							-.2969
.650						-.2742	
.700	-.0555				-.1008		
.725				.0618			
.750						-.2294	-.2822
.760			.0538				

DATE 10 JAN 75 TABULATED PRESSURE DATA - IA14A - VOL. 6

ARC11-716 IA14 01+712+S12N25 UPPER WING (RB1U51)

ALPHAO(1) = -7.870 BETAO (3) = .020

SECTION (1)UPPER WING DEPENDENT VARIABLE CP

X/CW \ Y/BW	.2990	.3640	.4270	.5340	.6730	.7800	.8870
.775				.1537	.0763		
.808			.1306				
.834	.0978						
.850				.1479	.1289	-.0468	
.857			.0986				
.865	.1376						
.900	.1136			.1234			-.1078
.905			.0940		.1509		
.950				.1085		.0193	
.953			.0894				
.965	.0606						

ALPHAO(1) = -7.970 BETAO (4) = 4.110

SECTION (1)UPPER WING DEPENDENT VARIABLE CP

X/CW \ Y/BW	.2990	.3640	.4270	.5340	.6730	.7800	.8870
.000	-.1532	-.1033	.0867	.2801	.1887	.1197	.1048
.020				.4592	.3922	.4137	.4380
.025			.2149				
.040		-.0524					
.045			.2078				
.050	-.1269			.3304	.3257	.3306	.3385
.080				.2249			
.085			.1696				
.086		.0314					
.094	-.0747						
.150				.0673	.0891	.1266	.1548
.163		.0000					
.177			.0805				
.193		.1210					
.225	-.0235						
.250				-.0419	-.0445	-.0323	-.0293
.274			.0137				
.339		-.0269					
.362	.0812						
.400				-.1634	-.1660		-.1967
.402			-.1485				
.497	.0000						
.550				-.1869	-.2230		
.565			.0000				
.600							-.2766
.650						-.2517	

ARC11-716 IA14 O1+T12+S12N25 UPPER WING (RB1U51)

ALPHAO(1) = -7.970 BETAO (4) = 4.110

SECTION (1)UPPER WING DEPENDENT VARIABLE CP

Y/BW	.2990	.3640	.4270	.5340	.6730	.7800	.8870
X/CW							
.700	-.0332				-.1079		
.725				.0929			
.750						-.1044	-.2689
.760			.0432				
.775				.1255	.1356		
.808			.0940				
.834	.0855						
.850				.1053	.1318	.0638	
.857			.0502				
.865	.0981						
.900	.0646			.0738			.0008
.905			.0412		.1215		
.950				.0581		.1628	
.953			.0416				
.965	.0189						

ALPHAO(1) = -7.990 BETAO (5) = 8.180

SECTION (1)UPPER WING DEPENDENT VARIABLE CP

Y/BW	.2990	.3640	.4270	.5340	.6730	.7800	.8870
X/CW							
.000	-.2211	-.1754	.0663	.1835	.0648	.0526	.0695
.020				.3681	.3078	.3590	.3514
.025			.1874				
.040		-.0818					
.045			.1691				
.050	-.1874			.2651	.2716	.2942	.2827
.080				.1834			
.085			.1377				
.086		.0236					
.094	-.1072						
.150				.0483	.0861	.1150	.1254
.163		.0000					
.177			.0495				
.193		.1073					
.229	-.0433						
.250				-.0528	-.0407	-.0350	-.0386
.274			-.0023				
.339		-.0539					
.362	.0635						
.400				-.1664	-.1531		-.1886
.402			-.1632				
.497	.0000						

ARC11-716 IA14 01+T12+S12N25 UPPER WING (RB1U51)

ALPHAO(1) = -7.990 BETAO (5) = 8.180

SECTION (1)UPPER WING DEPENDENT VARIABLE CP

X/CW \ Y/BW	.2990	.3640	.4270	.5340	.6730	.7800	.8870
.550				-.1173	-.2074		
.565			.0000				
.600							-.2627
.650						-.2211	
.700	-.0113				-.1275		
.725				.0853			
.750						.0373	-.1924
.760			.0557				
.775				.1290	.0975		
.808			.0680				
.834	.0632						
.850				.0802	.1145	.0967	
.857			.0190				
.865	.0745						
.900	.0294			.0360			.1073
.905			.0025		.0955		
.950				.0217		.1384	
.953			-.0088				
.965	-.0157						

ALPHAO(2) = -3.960 BETAO (1) = -8.080

SECTION (1)UPPER WING DEPENDENT VARIABLE CP

X/CW \ Y/BW	.2990	.3640	.4270	.5340	.6730	.7800	.8870
.000	.1141	.0165	.4280	.6841	.6406	.5921	.6287
.020				.5568	.5502	.5677	.5937
.025			.3595				
.040		.0639					
.045			.2729				
.050	.0398			.3331	.3609	.3662	.3753
.080				.1663			
.085			.1506				
.086		.1437					
.094	.0339						
.150				-.0448	-.0160	.0526	.1060
.163		.0000					
.177			-.0014				
.193		.1040					
.229	.0211						
.250				-.1787	-.1502	-.1295	-.1055
.274			-.1138				
.339		-.0080					

ARC11-716 IA14 O1+T12+S12N25 UPPER WING (RB1U51)

ALPHAO(2) = -3.980 BETAO (1) = -8.060

SECTION (1)UPPER WING DEPENDENT VARIABLE CP

Y/BW	.2990	.3640	.4270	.5340	.6730	.7800	.8870
X/CW							
.362	.0911						
.400				-.2752	-.3083		-.2960
.402			-.2446				
.497	.0000						
.550				-.3232	-.3533		
.565			.0000				
.600							-.3666
.650						-.3905	
.700	-.1793				-.1488		
.725				-.1805			
.750						-.3721	-.3591
.760			-.0306				
.775				-.0291	-.3181		
.808			.0866				
.834	.0722						
.850				.0109	-.1748	-.3343	
.857			.1209				
.865	.1731						
.900	.1694			.0511			-.2829
.905			.1385		-.1442		
.950				.0878		-.1708	
.953			.1349				
.965	.1062						

ALPHAO(2) = -3.990 BETAO (2) = -4.030

SECTION (1)UPPER WING DEPENDENT VARIABLE CP

Y/BW	.2990	.3640	.4270	.5340	.6730	.7800	.8870
X/CW							
.000	.0322	-.0402	.3317	.5750	.5372	.4966	.5342
.020				.5192	.5089	.5213	.5296
.025			.3082				
.040		.0159					
.045			.2392				
.050	-.0406			.3168	.3334	.3400	.3392
.080				.1599			
.085			.1360				
.086		.0900					
.094	-.0361						
.150				-.0596	-.0055	.0484	.0868
.163		.0000					
.177			-.0163				
.193		.0777					

ARC11-716 IA14 O1+T12+S12N25 UPPER WING (RB1U51)

ALPHAO(2) = -3.990 BETAO (2) = -4.030

SECTION (1)UPPER WING DEPENDENT VARIABLE CP

Y/BW	.2990	.3640	.4270	.5340	.6730	.7800	.8870
X/CW							
.229	-.0083						
.250				-.1706	-.1546	-.1302	-.1165
.274			-.1215				
.339		-.1036					
.362	.0548						
.400				-.2664	-.2931		-.3003
.402			-.2504				
.497	.0000						
.550				-.3167	-.3414		
.565			.0000				
.600							-.3735
.650						-.3822	
.700	-.1847				-.1312		
.725				-.1100			
.750						-.3676	-.3626
.760			-.0255				
.775				-.0140	-.2470		
.808			.0999				
.834	.0607						
.850				.0471	-.1567	-.2710	
.857			.1025				
.865	.1411						
.900	.1301			.0797			-.2881
.905			.1062		-.1442		
.950				.0974		-.1538	
.953			.0915				
.965	.0639						

ALPHAO(2) = -3.050 BETAO (3) = .040

SECTION (1)UPPER WING DEPENDENT VARIABLE CP

Y/BW	.2990	.3640	.4270	.5340	.6730	.7800	.8870
X/CW							
.000	-.0763	-.0783	.2202	.4578	.4404	.3925	.4402
.020				.4461	.4763	.4477	.4621
.025			.2337				
.040		-.0090					
.045			.1853				
.050	-.0948			.2714	.2806	.2887	.2907
.080				.1367			
.085			.1046				
.086		.0490					
.094	-.1120						

ARC11-716 IA14 O1+T12+S12N25 UPPER WING (RB1U51)

ALPHAO(2) = -3.850 BETAO (3) = .040

SECTION (1)UPPER WING DEPENDENT VARIABLE CP

Y/BW	.2990	.3640	.4270	.5340	.6730	.7800	.8870
X/CW							
.150				-.0498	-.0175	.0235	.0603
.163		.0000					
.177			-.0179				
.193		.0598					
.229	-.0273						
.250				-.1535	-.1509	-.1391	-.1316
.274			-.1055				
.339		-.1058					
.362	.0278						
.400				-.2434	-.2829		-.3065
.402			-.2278				
.497	.0000						
.550				-.2883	-.3123		
.565			.0000				
.600							-.3709
.650						-.3633	
.700	-.1610				-.1198		
.725				-.0673			
.750						-.3352	-.3657
.760			-.0257				
.775				.0446	-.1693		
.808			.0902				
.834	.0358						
.850				.0873	-.1077	-.1797	
.857			.0685				
.865	.0892						
.900	.0768			.0843			-.2713
.905			.0634		.0568		
.950				.0749		-.1209	
.953			.0473				
.965	.0158						

ALPHAO(2) = -3.970 BETAO (4) = 4.090

SECTION (1)UPPER WING DEPENDENT VARIABLE CP

Y/BW	.2990	.3640	.4270	.5340	.6730	.7800	.8870
X/CW							
.000	-.1807	-.1120	.1663	.3991	.3345	.2874	.3311
.020				.3954	.3664	.3756	.3806
.025			.1819				
.040		-.0700					
.045			.1448				
.050	-.1708			.2402	.2377	.2421	.2364

ARC11-716 IA14 O1+T12+S12N25 UPPER WING (RB1U51)

ALPHAO(2) = -3.970 BETAO (4) = 4.090

SECTION (1)UPPER WING DEPENDENT VARIABLE CP

Y/BW	.2990	.3640	.4270	.5340	.6730	.7800	.8870
X/CW							
.080				.1170			
.085			.0837				
.086		-.0014					
.094	-.1542						
.150				-.0389	-.0191	.0127	.0325
.163		.0000					
.177			-.0092				
.193		.0469					
.229	-.0630						
.250				-.1331	-.1385	-.1330	-.1409
.274			-.0737				
.339		-.0935					
.362	.0183						
.400				-.2275	-.2520		-.3005
.402			-.2092				
.497	.0000						
.550				-.2606	-.2913		
.565			.0000				
.600							-.3673
.650						-.3321	
.700	-.1017				-.1385		
.725				-.0020			
.750						-.2963	-.3465
.760			-.0129				
.775				.0808	-.0506		
.808			.0610				
.834	.0246						
.850				.0755	.0417	-.1293	
.857			.0246				
.865	.0554						
.900	.0423			.0486			-.1756
.905			.0179		.0824		
.950				.0325		-.0940	
.953			.0050				
.965	-.0215						

ARC11-716 IA14 O1+T12+S12N25 UPPER WING (RB1U51)

ALPHAO(2) = -4.000 BETAO (5) = 8.150

SECTION (1)UPPER WING DEPENDENT VARIABLE CP

Y/BW	.2990	.3640	.4270	.5340	.6730	.7800	.8870
X/CW							
.000	-.2843	-.1574	.0463	.3302	.2498	.1842	.2145
.020				.3327	.3036	.3244	.3177
.025			.1531				
.040		-.1297					
.045			.1524				
.050	-.2616			.1982	.2014	.2137	.1998
.080				.1022			
.085			.0883				
.086		-.0029					
.094	-.1829						
.150				-.0302	-.0174	.0077	.0257
.163		.0000					
.177			-.0020				
.193		.0530					
.229	-.0899						
.250				-.1208	-.1239	-.1217	-.1332
.274			-.0563				
.339		-.0869					
.362	.0265						
.400				-.2137	-.2335		-.2807
.402			-.2027				
.497	.0000						
.550				-.2403	-.2768		
.565			.0000				
.600							-.3243
.650						-.3099	
.700	-.0764				-.1551		
.725				.0026			
.750						-.2299	-.3058
.760			-.0135				
.775				.0725	-.0024		
.800			.0376				
.834	.0090						
.850				.0484	.0631	-.0631	
.857			.0020				
.865	.0419						
.900	.0139			.0203			-.0882
.905			-.0141		.0719		
.950				.0010		.0835	
.953			-.0242				
.965	-.0453						

ARC11-716 IA14 01+T12+S12N25 UPPER WING (RR1U51)

ALPHAO(3) = -.370 BETAO (1) = -8.100

SECTION (1)UPPER WING DEPENDENT VARIABLE CP

Y/BW	.2990	.3640	.4270	.5340	.6730	.7800	.8870
X/CW							
.000	.1048	.0387	.4502	.7470	.7250	.6743	.7187
.020				.4528	.4855	.4801	.4926
.025			.2802				
.040		.0442					
.045			.1817				
.050	.0549			.2198	.2526	.2576	.2581
.060				.0510			
.065			.0316				
.086		.0929					
.094	.0101						
.150				-.1649	-.1189	-.0490	-.0041
.163		.0000					
.177			-.0901				
.193		.0112					
.229	-.0130						
.250				-.2678	-.2675	-.2317	-.2007
.274			-.2081				
.339		-.1646					
.362	.0273						
.400				-.3646	-.3952		-.3743
.402			-.3163				
.497	.0000						
.550				-.3917	-.4378		
.565			.0000				
.600							-.4065
.650						-.4403	
.700	-.2382				-.3767		
.725				-.3106			
.750						-.4642	-.4266
.760			-.1153				
.775				-.1725	-.4199		
.808			-.0390				
.834	-.0167						
.850				-.1166	-.2828	-.4208	
.857			.0104				
.865	.1013						
.900	.1172			-.0478			-.3069
.905			.0563		-.2276		
.950				-.0472		-.2785	
.953			.0747				
.965	.0653						

ARC11-716 IA14 O1+T12+S12K25 UPPER WING (RB1U51)

ALPHAO(3) = -.290 BETAO (2) = -4.010

SECTION (1)UPPER WING DEPENDENT VARIABLE CP

Y/BW	.2990	.3640	.4270	.5340	.6730	.7800	.8870
X/CW							
.000	.0167	-.0631	.3672	.6608	.6368	.5867	.6228
.020				.4231	.4410	.4312	.4383
.025			.2453				
.040		.0025					
.045			.1571				
.050	-.0423			.2041	.2260	.2287	.2261
.080				.0479			
.085			.0352				
.086		.0335					
.094	-.0553						
.150				-.1503	-.1227	-.0632	-.0230
.163		.0000					
.177			-.0812				
.193		.0117					
.229	-.0471						
.250				-.2628	-.2601	-.2394	-.2131
.274			-.2006				
.339		-.1679					
.362	.0057						
.400				-.3537	-.3887		-.3810
.402			-.3129				
.497	.0000						
.550				-.3822	-.4280		
.565			.0000				
.600							-.4156
.650						-.4548	
.700	-.2435				-.1604		
.725				-.2066			
.750						-.4514	-.4336
.760			-.0986				
.775				-.1367	-.3606		
.808			-.0112				
.834	-.0023						
.850				-.1047	-.2573	-.3065	
.857			.0335				
.865	.0981						
.900	.0968			-.0554			-.3613
.905			.0569		-.2313		
.950				.0001		-.2222	
.953			.0574				
.965	.0318						

ARC11-716 IA14 O1+T12+S12N25 UPPER WING (RB1U51)

ALPHAO(3) = -.390 BETAO (3) = .030

SECTION (1)UPPER WING DEPENDENT VARIABLE CP

Y/BW	.2990	.3640	.4270	.5340	.6730	.7800	.8870
X/CW							
.000	-.0754	-.0913	.3031	.5638	.5350	.4863	.5307
.020				.3785	.3378	.3774	.3022
.025			.2101				
.040		-.0344					
.045			.1355				
.050	-.1170			.1822	.1928	.1923	.1879
.080				.0357			
.085			.0341				
.086		.0267					
.094	-.1334						
.150				-.1321	-.1296	-.0811	-.0404
.163		.0000					
.177			-.0716				
.193		.0065					
.229	-.0566						
.250				-.2555	-.2514	-.2429	-.2232
.274			-.1876				
.339		.1615					
.362	-.0028						
.400				-.3279	-.3777		-.3836
.402			-.2905				
.497	.0000						
.550				-.3533	-.4038		
.565			.0000				
.600							-.4233
.650						-.4431	
.700	-.2217				-.1415		
.725				-.1497			
.750						-.4229	-.4296
.760			-.0828				
.775				-.0845	-.2720		
.808			.0325				
.834	-.0012						
.850				-.0182	-.2091	-.2787	
.857			.0309				
.865	.0569						
.900	.0463			.0151			-.3467
.905			.0288		-.1804		
.950				.0348		-.2003	
.953			.0166				
.965	-.0134						

ARC11-716 IA14 O1+T12+S12N25 UPPER WING (RB1U51)

ALPHAO(3) = -.400 BETAO (4) = 4.090

SECTION (1)UPPER WING DEPENDENT VARIABLE CP

Y/BW	.2990	.3640	.4270	.5340	.6730	.7800	.8870
X/CW							
.000	-.1884	-.1502	.2580	.4933	.4481	.3935	.4399
.020				.3242	.3182	.3029	.3086
.025			.1552				
.040		-.0623					
.045			.0963				
.050	-.1935			.1509	.1468	.1373	.1356
.080				.0258			
.085			.0214				
.086		-.0090					
.094	-.1886						
.150				-.1318	-.1425	-.1047	-.0722
.163		.0000					
.177			-.0786				
.193		.0150					
.229	-.0824						
.250				-.2207	-.2456	-.2366	-.2341
.274			-.1406				
.339		-.1305					
.362	.0026						
.400				-.2840	-.3391		-.3817
.402			-.2479				
.497	.0000						
.550				-.3177	-.3539		
.565			.0000				
.600							-.4132
.650						-.4077	
.700	-.1678				-.1532		
.725				-.1232			
.750						-.3745	-.4132
.760			-.0738				
.775				-.0068	-.2085		
.808			.0221				
.834	-.0155						
.850				.0321	-.1425	-.2242	
.857			.0021				
.865	.0181						
.900	.0058			.0237			-.2598
.905			-.0062		.0020		
.950				.0141		-.1740	
.953			-.0206				
.965	-.0496						

ARC11-716 IA14 O1+T12+S12N25 UPPER WING (RB1U51)

ALPHA0(3) = -.400 BETA0 (5) = 0.140

SECTION (1)UPPER WING DEPENDENT VARIABLE CP

Y/BW	.2990	.3640	.4270	.5340	.6730	.7800	.8870
X/CW							
.000	-.3415	-.1752	.0929	.3773	.3554	.3076	.3393
.020				.2478	.2707	.2653	.2555
.025			.0665				
.040		-.1499					
.045			.0525				
.050	-.2889			.1124	.1184	.1177	.1039
.080				.0116			
.085			.0295				
.086		-.0413					
.094	-.2560						
.150				-.1144	-.1192	-.0977	-.0657
.163		.0000					
.177			-.0432				
.193		.0257					
.229	-.0924						
.250				-.1833	-.2122	-.2232	-.2118
.274			-.1028				
.339		-.1202					
.362	.0148						
.400				-.2690	-.3133		-.3513
.402			-.2308				
.497	.0000						
.550				-.2938	-.3370		
.565			.0000				
.600							-.3987
.630						-.3591	
.700	-.1619				-.1764		
.725				-.1052			
.750						-.3195	-.3695
.760			-.0688				
.775				-.0149	-.1348		
.808			.0032				
.834	-.0265						
.850				.0049	-.0348	-.1560	
.857			-.0296				
.865	.0017						
.900	-.0177			-.0093			-.1698
.905			-.0344		.0477		
.950				-.0204		-.1129	
.953			-.0460				
.965	-.0728						

ARC11-716 IA14 O1+T12+S12N25 UPPER WING (RB1U51)

ALPHAO(4) = 4.110 BETAO (1) = -8.070

SECTION (1)UPPER WING DEPENDENT VARIABLE CP

Y/BW	.2990	.3640	.4270	.5340	.6730	.7800	.8870
X/CW							
.000	.1051	.0583	.4976	.8129	.8137	.7723	.8031
.020				.3272	.3807	.3446	.3355
.025			.1999				
.040		.0539					
.045			.0822				
.050	.0539			.0967	.1247	.1235	.0924
.080				-.0707			
.085			-.0703				
.086		.0681					
.094	.0137						
.150				-.2959	-.2338	-.1773	-.1445
.163		.0000					
.177			-.2042				
.193		-.0566					
.229	-.0076						
.250				-.3933	-.3737	-.3357	-.3033
.274			-.2882				
.339		-.2338					
.362	.0078						
.400				-.4464	-.4839		-.4451
.402			-.3905				
.497	.0000						
.550				-.4812	-.5233		
.565			.0000				
.600							-.4456
.650						-.5005	
.700	-.2946				-.2017		
.725				-.4126			
.750						-.5056	-.4510
.760			-.2118				
.775				-.3000	-.5105		
.800			-.1587				
.834	-.1297						
.850				-.2146	-.3707	-.4734	
.857			-.1279				
.865	.0107						
.900	.0524			-.1897			-.4046
.905			-.0663		-.2564		
.950				-.1806		-.3419	
.953			-.0116				
.965	.0130						

ARC11-716 IA14 D1+T12+S12N25 UPPER WING (R81U51)

ALPHAO(4) = 4.100 BETAO (2) = -3.980

SECTION (1)UPPER WING DEPENDENT VARIABLE CP

Y/BW	.2990	.3640	.4270	.5340	.6730	.7800	.8870
X/CW							
.000	.0084	-.0302	.3954	.7342	.7264	.6916	.7169
.020				.2741	.3337	.3059	.2850
.025			.1619				
.040		-.0239					
.045			.0564				
.050	-.0281			.0653	.0937	.0941	.0590
.080				-.0858			
.085			-.0724				
.086		.0040					
.094	-.0638						
.150				-.2847	-.2431	-.1920	-.1635
.163		.0000					
.177			-.1960				
.193		-.0676					
.229	-.0659						
.250				-.3565	-.3732	-.3429	-.3174
.274			-.2788				
.339		-.2253					
.362	-.0178						
.400				-.4347	-.4736		-.4513
.402			-.3715				
.497	.0000						
.550				-.4553	-.5070		
.565			.0000				
.600							-.4520
.650						-.4959	
.700	-.3030				-.1914		
.725				-.3309			
.750						-.5120	-.4520
.760			-.1800				
.775				-.2396	-.4711		
.808			-.1491				
.834	-.0865						
.850				-.2108	-.3421	-.4441	
.857			-.0991				
.865	.0301						
.900	.0537			-.2078			-.4129
.905			-.0373		-.2939		
.950				-.1723		-.2769	
.953			.0008				
.965	-.0079						

ARC11-716 IA14 O1+T12+S12N25 UPPER WING (RB1U51)

ALPHAO(4) = 4.100 BETAO (3) = .060

SECTION (1)UPPER WING DEPENDENT VARIABLE CP

Y/BW	.2990	.3640	.4270	.5340	.6730	.7800	.8870
X/CW							
.000	-.0942	-.1675	.3277	.6426	.6316	.5984	.6217
.020				.2353	.2799	.2414	.2147
.025			.1187				
.040		-.1105					
.045			.0309				
.050	-.1291			.0413	.0590	.0475	.0088
.080				-.1018			
.085			-.0868				
.086		-.0219					
.094	-.1273						
.150				-.2853	-.2531	-.2113	-.1891
.163		.0000					
.177			-.1872				
.193		-.0674					
.229	-.1012						
.250				-.3522	-.3732	-.3535	-.3330
.274			-.2722				
.339		-.2270					
.362	-.0276						
.400				-.4213	-.4683		-.4619
.402			-.3619				
.497	.0000						
.550				-.4332	-.4954		
.565			.0000				
.600							-.4689
.650						-.5079	
.700	-.2915				-.1754		
.725				-.2237			
.750						-.5192	-.4754
.760			-.1577				
.775				-.2118	-.3696		
.808			-.0920				
.834	-.0315						
.850				-.1933	-.3284	-.3411	
.857			-.0497				
.865	.0319						
.903	.0269			-.1368			-.4032
.905			-.0190		-.2968		
.950				-.0718		-.2747	
.953			-.0125				
.965	-.0412						

ARC11-716 IA14 O1+T12+S12N25 UPPER WING (RB1U51)

ALPHAO(4) = 4.100 BETAO (4) = 4.130

SECTION (1)UPPER WING DEPENDENT VARIABLE CP

Y/BW	.2990	.3640	.4270	.5340	.6730	.7800	.8870
X/CW							
.000	-.2222	-.3464	.2086	.5347	.5324	.4985	.5368
.020				.1486	.1915	.1644	.1508
.025			.0473				
.040		-.1228					
.045			-.0254				
.050	-.2143			-.0167	-.0057	-.0132	-.0447
.080				-.1359			
.085			-.1080				
.086		-.0526					
.094	-.2045						
.150				-.2792	-.2785	-.2451	-.2259
.163		.0000					
.177			-.1791				
.193		-.0333					
.229	-.1014						
.250				-.3342	-.3835	-.3750	-.3582
.274			-.2475				
.339		-.2037					
.362	-.0240						
.400				-.3822	-.4586		-.4784
.402			-.3809				
.497	.0000						
.550				-.3911	-.4699		
.565			.0000				
.600							-.4892
.650						-.5154	
.700	-.2631				-.1941		
.725				-.2004			
.750						-.4863	-.3896
.760			-.1470				
.775				-.1553	-.3058		
.808			-.0534				
.834	-.0245						
.850				-.0998	-.2530	-.3227	
.857			-.0504				
.865	-.0080						
.900	-.0242			-.0634			-.3580
.905			-.0486		-.2121		
.950				-.0424		-.2780	
.953			-.0605				
.965	-.0836						

ARC11-716 IA14 01+T12+S12N25 UPPER WING (RB1U51)

ALPHAO(4) = 4.090 BETAO (5) = 8.180

SECTION (1)UPPER WING DEPENDENT VARIABLE CP

Y/BW	.2990	.3640	.4270	.5340	.6730	.7800	.8870
X/CW							
.000	-.4104	-.2580	-.0101	.2952	.4164	.4079	.5067
.020				.0437	.1487	.1231	.1479
.025			-.0408				
.040		-.2071					
.045			-.0564				
.050	-.3437			-.0597	-.0220	-.0394	-.0418
.080				-.1386			
.085			-.0841				
.086		-.2181					
.094	-.3049						
.150				-.2324	-.2636	-.2446	-.2119
.163		.0000					
.177			-.1451				
.193		-.0034					
.229	-.1001						
.250				-.2779	-.3481	-.3493	-.3372
.274			-.1914				
.339		-.1613					
.362	.0037						
.400				-.3328	-.4089		-.4602
.402			-.2957				
.497	.0000						
.550				-.3468	-.4030		
.565			.0000				
.600							-.4614
.650						-.4593	
.700	-.2485				-.1977		
.725				-.1708			
.750						-.4143	-.4279
.760			-.1272				
.775				-.0816	-.2149		
.808			-.0312				
.834	-.0309						
.850				-.0416	-.1503	-.2557	
.857			-.0521				
.865	-.0107						
.900	-.0524			-.0416			-.2841
.905			-.0583		-.0572		
.950				-.0521		-.2100	
.953			-.0638				
.965	-.1129						

ARC11-716 IA14 01+T12+S12N25 UPPER WING (RB1U51)

ALPHAO(5) = 8.010 BETAO (1) = -8.050

SECTION (1)UPPER WING DEPENDENT VARIABLE CP

Y/BW	.2990	.3640	.4270	.5340	.6730	.7800	.8870
X/CW							
.000	.1028	.0761	.5625	.8960	.8447	.7924	.7829
.020				.2385	.2382	.1610	.1039
.025			.1843				
.040		.0315					
.045			.0519				
.050	.0394			.0134	-.0105	-.0428	-.1184
.080				-.1474			
.085			-.1148				
.086		.0489					
.094	.0178						
.150				-.3584	-.3252	-.3020	-.2912
.163		.0000					
.177			-.2868				
.193		-.1036					
.229	-.0151						
.250				-.4628	-.4464	-.4275	-.4013
.274			-.3606				
.339		-.2919					
.362	-.0076						
.400				-.5337	-.5405		-.5090
.492			-.4584				
.497	.0000						
.550				-.5513	-.5565		
.565			.0000				
.600							-.5140
.650						-.5188	
.700	-.3376				-.2365		
.725				-.4864			
.750						-.4825	-.5138
.760			-.2859				
.775				-.4478	-.4679		
.808			-.2527				
.834	-.2664						
.850				-.3481	-.4571	-.4731	
.857			-.2300				
.865	-.1378						
.900	-.0300			-.3024			-.4755
.905			-.1859		-.4162		
.930				-.2577		-.4307	
.953			-.1146				
.965	-.0282						

ARC11-716 IA14 O1+T12+S12N25 UPPER WING (RB1U51)

ALPHAO(5) = 8.010 BETAO (2) = -4.010

SECTION (1)UPPER WING DEPENDENT VARIABLE CP

Y/BW	.2990	.3640	.4270	.5340	.6730	.7800	.8870
X/CW							
.000	.0172	-.0356	.4268	.8119	.7821	.7102	.7127
.020				.1853	.1992	.1171	.0664
.025			.0920				
.040		-.0641					
.045			-.0306				
.050	-.0374			-.0269	-.0410	-.0800	-.1424
.080				-.1799			
.085			-.1774				
.086		-.0214					
.094	-.0631						
.150				-.3824	-.3453	-.3256	-.3130
.163		.0000					
.177			-.3228				
.193		-.1609					
.229	-.0771						
.250				-.4743	-.4633	-.4437	-.4202
.274			-.3746				
.339		-.3104					
.362	-.0702						
.400				-.5393	-.5543		-.5219
.402			-.4363				
.497	.0000						
.550				-.5505	-.5738		
.565			.0000				
.600							-.5136
.650						-.5228	
.700	-.3449				-.2326		
.725				-.4749			
.750						-.4768	-.5078
.760			-.2611				
.775				-.3879	-.4721		
.800			-.2565				
.834	-.1613						
.850				-.2407	-.4647	-.4614	
.857			-.2153				
.865	-.0585						
.900	.0025			-.1800			-.4652
.905			-.1261		-.4107		
.950				-.1804		-.4088	
.953			-.0460				
.965	-.0434						

ARC11-716 IA14 O1+T12+S12N25 UPPER WING (RB1U51)

ALPHAO(3) = 8.020 BETAO (3) = .030

SECTION (1)UPPER WING DEPENDENT VARIABLE CP

Y/BW	.2990	.3640	.4270	.5340	.6730	.7800	.8870
X/CW							
.000	-.0909	-.2183	.2836	.6726	.6797	.6227	.6232
.020				.0756	.1343	.0660	.0149
.025			-.0160				
.040		-.1633					
.045			-.1108				
.050	-.1326			-.0992	-.0896	-.1178	-.1771
.080				-.2239			
.085			-.2045				
.086		-.1035					
.094	-.1302						
.150				-.3974	-.3638	-.3455	-.3340
.163		.0000					
.177			-.2998				
.193		-.1614					
.229	-.1312						
.250				-.4694	-.4709	-.4563	-.4362
.274			-.3397				
.339		-.2810					
.362	-.0761						
.400				-.5028	-.5534		-.5315
.402			-.4162				
.497	.0000						
.550				-.5115	-.5789		
.565			.0000				
.600							-.5256
.650						-.5348	
.700	-.3403				-.2084		
725				-.3010			
.750						-.4889	-.5209
.760			-.2373				
.775				-.2646	-.4842		
.808			-.2027				
.834	-.0819						
.850				-.2310	-.4590	-.4526	
.857			-.1454				
.865	-.0236						
.900	-.0060			-.2181			-.4525
.935			-.0870		-.4091		
.950				-.1822		-.3791	
.955			-.0555				
.965	-.0651						

ARC11-716 IA14 O1+T12+S12N25 UPPER WING (RB1U51)

ALPHAO(5) = 6.010 BETAO (4) = 4.150

SECTION (1)UPPER WING DEPENDENT VARIABLE CP

Y/BW	.2990	.3640	.4270	.5340	.6730	.7800	.8870
X/CW							
.000	-.2416	-.4287	.0577	.5332	.5642	.5267	.5298
.020				-.0260	.0615	.0073	-.0403
.025			-.1031				
.040		-.2649					
.045			-.1581				
.050	-.2315			-.1641	-.1444	-.1595	-.2171
.080				-.2670			
.085			-.2259				
.086		-.1526					
.094	-.2110						
.150				-.4136	-.3898	-.3706	-.3591
.163		.0000					
.177			-.2805				
.193		-.1251					
.229	-.1617						
.250				-.4583	-.4825	-.4704	-.4565
.274			-.3164				
.339		-.2468					
.362	-.0590						
.400				-.4610	-.5527		-.5458
.402			-.3719				
.497	.0000						
.550				-.4400	-.5678		
.565			.0000				
.600							-.5415
.650						-.5610	
.700	-.3132				-.2240		
.725				-.2699			
.750						-.5580	-.5491
.760			-.2078				
.775				-.2443	-.4839		
.808			-.1251				
.834	-.0553						
.850				-.2043	-.3494	-.4470	
.857			-.1062				
.865	-.0427						
.900	-.0583			-.1586			-.5064
.905			-.0922		-.2355		
.950				-.1147		-.3802	
.953			-.0981				
.965	-.1154						

ARC11-716 IA14 O1+T12+S12N25 UPPER WING (RB1U51)

ALPHAO(S) = 7.990 BETAO (S) = 8.280

SECTION (1)UPPER WING DEPENDENT VARIABLE CP

Y/BW	.2990	.3640	.4270	.5340	.6730	.7800	.8870
X/CW							
.000	-.3963	-.3128	-.1025	.1928	.4527	.4664	.5147
.020				-.1603	.0085	-.0047	-.0288
.025			-.1190				
.040		-.2597					
.045			-.1242				
.050	-.3540			-.2235	-.1745	-.1701	-.2054
.080				-.2764			
.085			-.1446				
.086		-.2338					
.094	-.2946						
.150				-.3260	-.3896	-.3460	-.3419
.163		.0000					
.177			-.1970				
.193		-.1221					
.229	-.1308						
.250				-.3384	-.4626	-.4447	-.4429
.274			-.2435				
.339		-.1995					
.362	-.0254						
.400				-.3738	-.4901		[illegible]
.402			-.3225				
.497	.0000						
.550				-.3725	-.4690		
.565			.0000				
.601							-.5187
.650						-.5303	
.700	-.2969				-.2214		
.725				-.1837			
.750						-.4954	-.5038
.760			-.1753				
.775				-.1216	-.2773		
.808			-.0876				
.834	-.0746						
.850				-.0969	-.2411	-.4155	
.857			-.1081				
.865	-.0636						
.900	-.0753			-.1010			-.3921
.905			-.1026		-.1491		
.950				-.1019		-.2957	
.953			-.1157				
.965	-.1184						